MS-6315 Micro-ATX

Intel PPGA 370 Processor

Intel Solano2 Chipset

Winbond 83627HF-AW LPC I/O

Creative CT5880 Controller 4-Speaker

ICH2 LAN Controller + Kinnereth Plus

Model option table

Model type	Function	Part Mark
MS6315	Stantard will be del	X_????
Option A	With/ CT5880	A_????
Option L	With/ LAN on board	L_????
Option H	With/ Hardware monitor	H_????
Option S	With/ STR	S_????
Option G	For Legend only	G_????

Stantard+W/LAN ,W/ HW Monitor , W/STR

Title	Page
Cover Sheet	1
Block Diagram	2
GPIO SPEC	3
370PGA Socket	4,5
GTL Termination	6
Clock Synthesizer	7
GMCH	8,9,10
AGP / AIMM Display Cache	11
Graphics Connectors	12
System Memory	13,14
ICH	15,16
FWH	17
CNR Riser	18
PCI Connectors	19,20
ATA66 Connectors	21
LPC I/O	22
Hardware monitor	23
Parallel / Serial Port	24
Keyboard/Mouse Connectors	25
PCI Audio Controllor	26
AC'97 Codec	27
Audio/Game Port	28
USB HUB & USB Connectors	29
VRM 8.4	30
Voltage Regulators	31
Front Panel	32
Pull-up Resistors	33
LAN	34
History	

Block Diagram

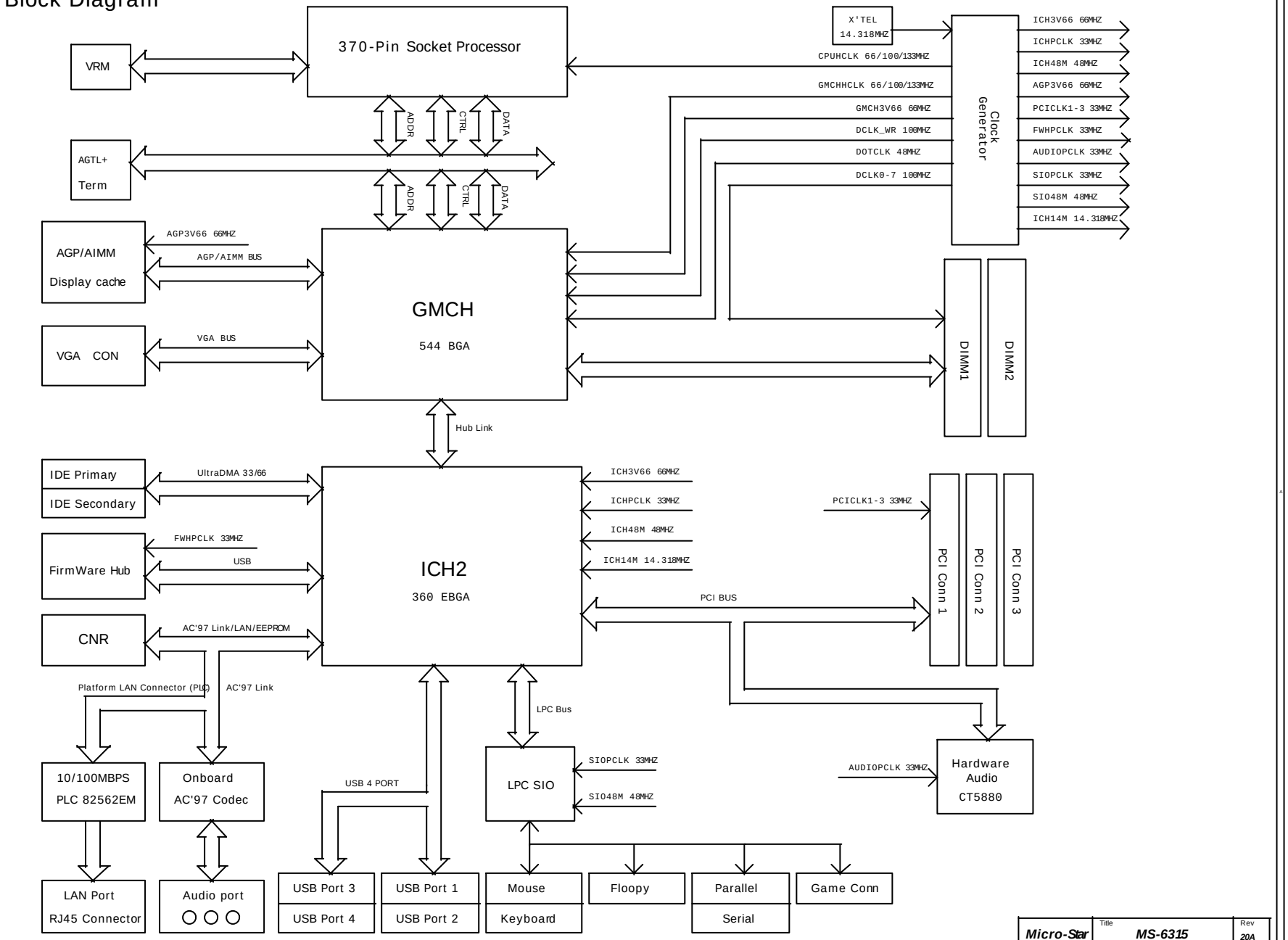

Micro-Star	Title: MS-6315	Rev: 20A
Document Number: Block Diagram		
Last Revision Date: Friday, September 22, 2000	Sheet 2 of 34	

General Purpose I/O Spec.

ICH

GPIO Pin	Type	Function
GPIO 0	I	Pull up (REQ#A)
GPIO 1	I	PREQ#5
GPIO 2~4	I	NC
GPIO 5	I	NC
GPIO 6	I	NC
GPIO 7	I	NC
GPIO 8	I	LAN Wake Up
GPIO 9	I	Not Implemented
GPIO 10	I	Not Implemented
GPIO 11	I	SMB_ALERT
GPIO 12	I	External SMI
GPIO 13	I	LPC PME
GPIO 14~15	I	Not Implemented
GPIO 16	O	Pull up(GNT#A)
GPIO 17	O	PGNT#5
GPIO 18~20	O	NC
GPIO 21	O	FAN Ctrl
GPIO 22	O	Pullup
GPIO 23	OD	BIOS update lock(H)/unlock(L)
GPIO 24	O	NC
GPIO 25	O	NC
GPIO 26	O	Not Implemented
GPIO 27	I/O	NC
GPIO 28	I/O	NC
GPIO 29~31	I/O	Not Implemented

FWH

GPIO Pin	Type	Function
GPI 0	I	ATA IDE 1 Detect
GPI 1	I	ATA IDE 2 Detect
GPI 2	I	GPI2=L GPI3=H Flash from FDD
GPI 3	I	GPI2=H GPI3=L Boot Auto clear CMOS

ICH2 SMLINK0,1 Connect to PCI2 for PCI card AOL

PCI Config.

DEVICE	ICH INT Pin	IDSEL
PCI Slot 1	INTA# INTB# INTC# INTD#	AD16
PCI Slot 2	INTB# INTC# INTD# INTA#	AD17
PCI Slot 3	INTC# INTD# INTA# INTB#	AD18
CT5880	INTC#	AD26

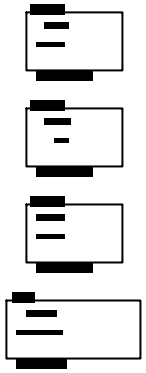

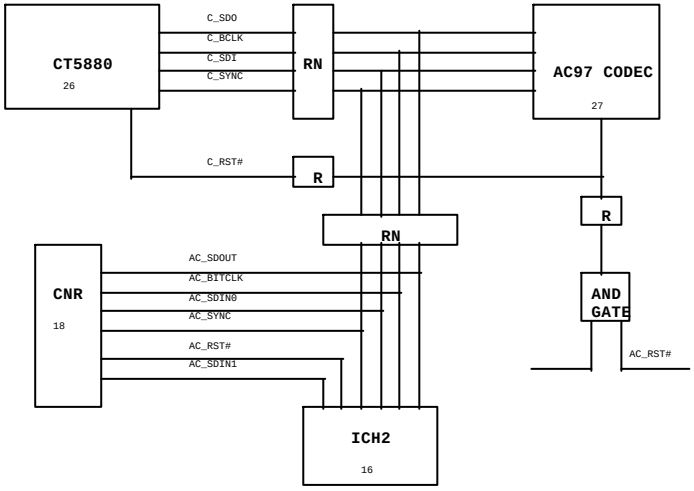

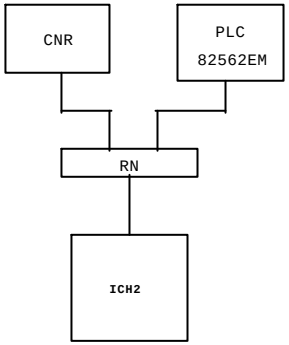

Micro-Star	MS-6315	20A
BIOS GPIO SPEC.		
Friday, September 22, 2000	3	34

370PGA Socket Part 1

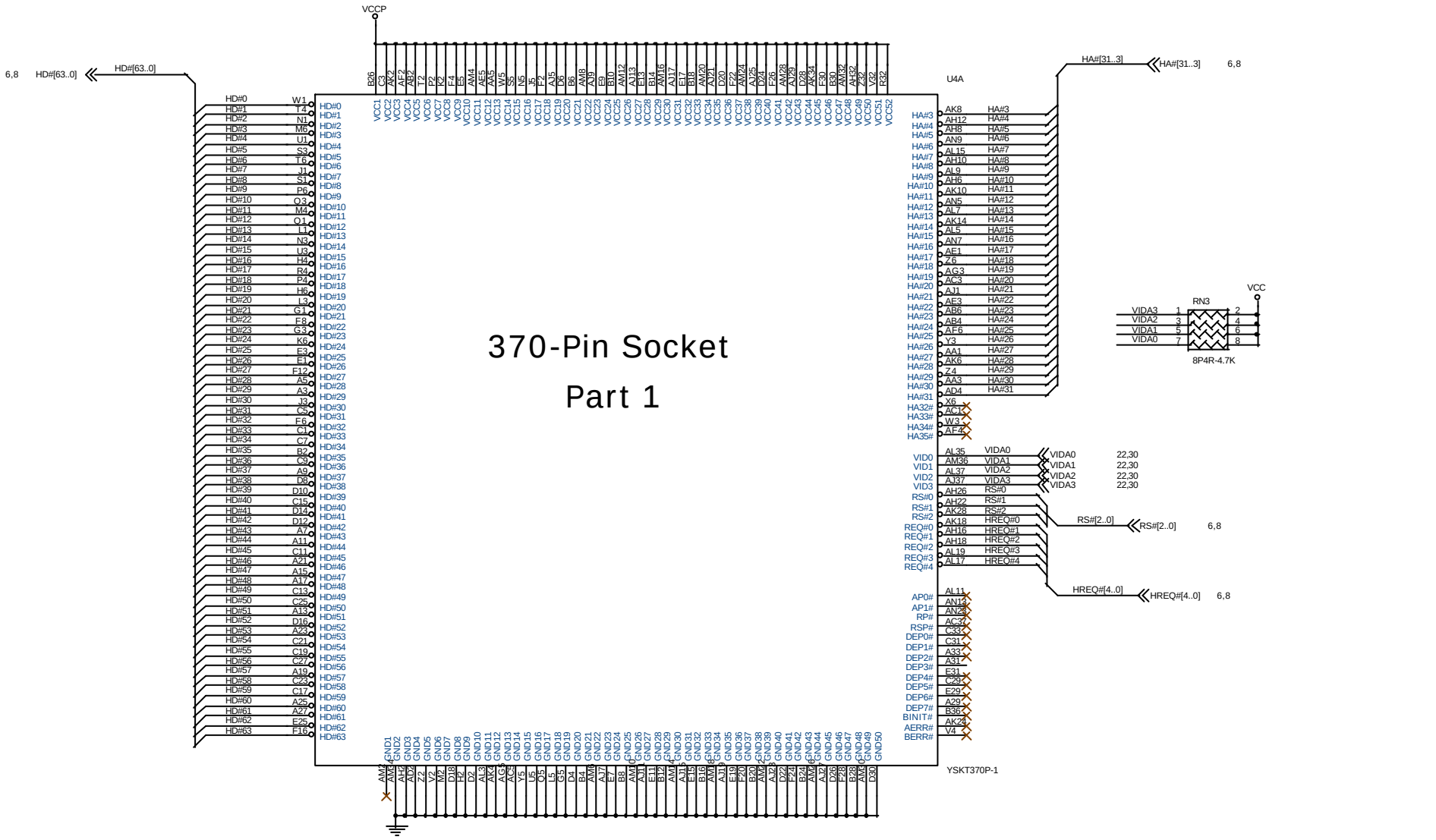

Micro-Star	Title: MS-6315		Rev: 20A
Document Number: SOCKET 370 PGA-1			
Last Revision Date: Friday, September 22, 2000		Sheet 4 of 34	

370PGA Socket Part 2

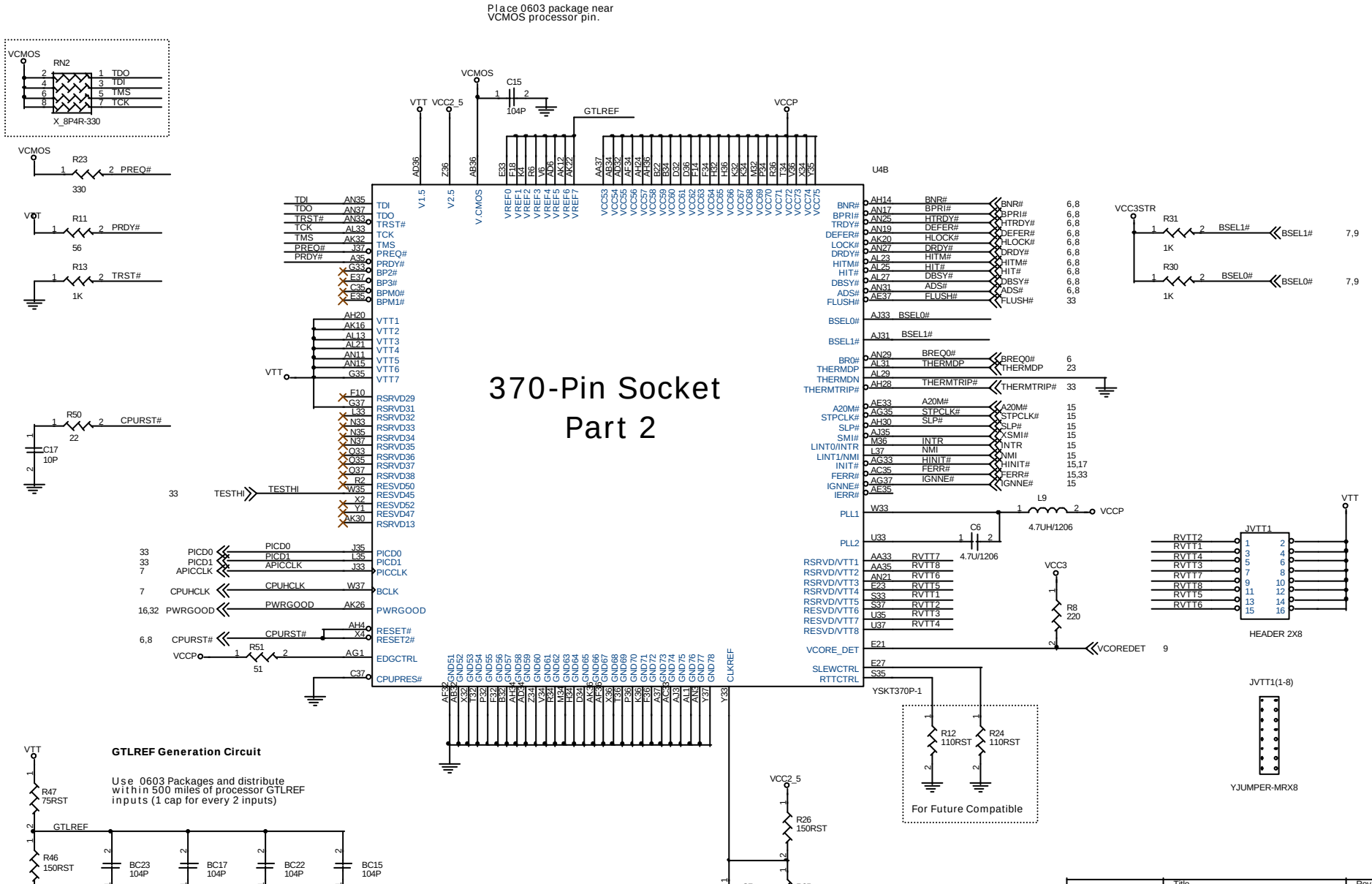

GTL Termination

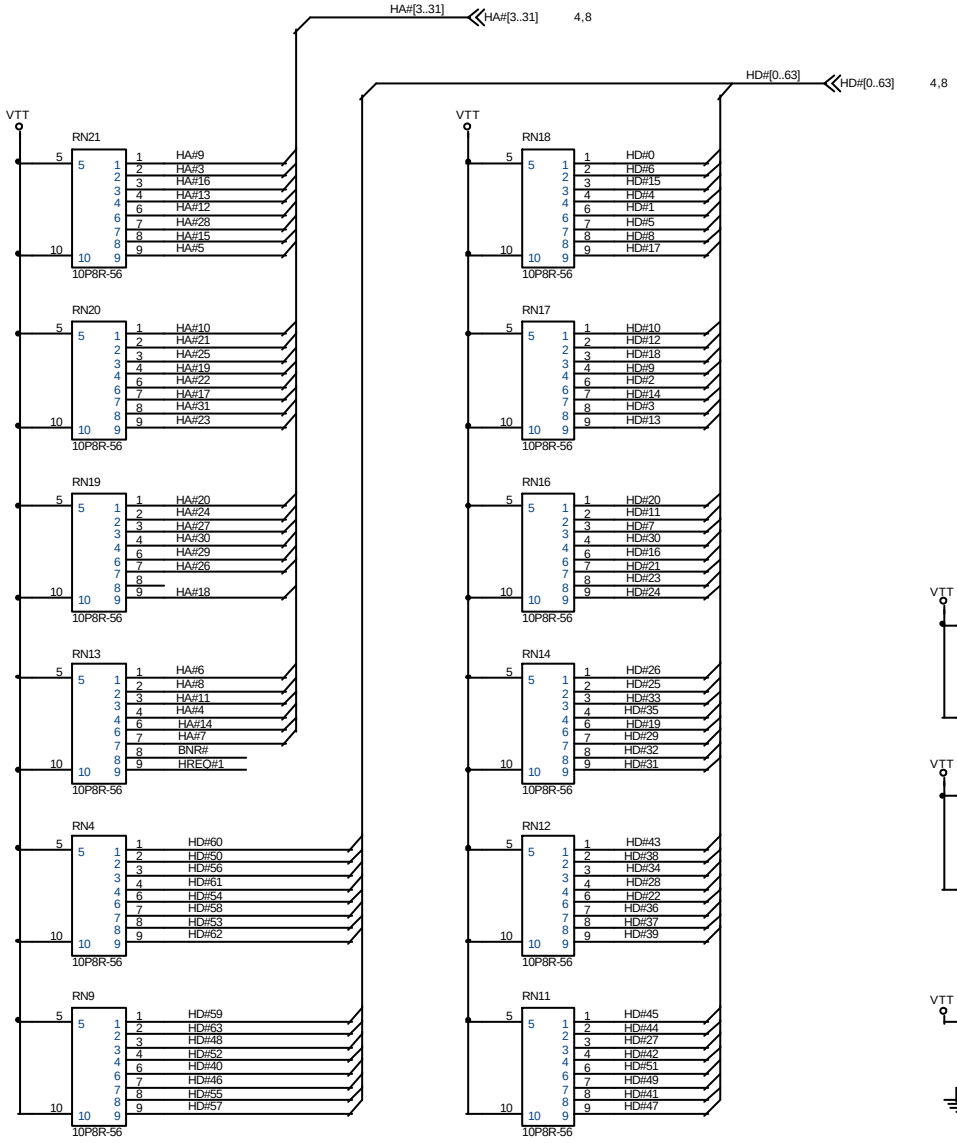

GTL VTT Bypass Capacitor

Every two R-packs add one 0.1U Cap.

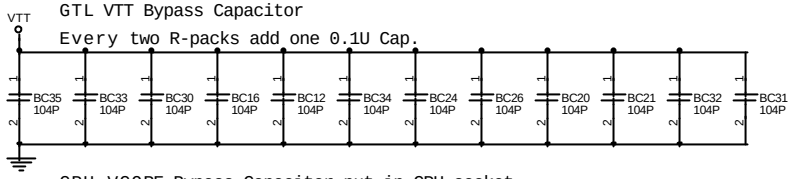

CPU VCORE Bypass Capacitor put in CPU socket

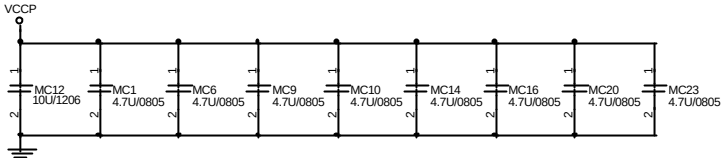

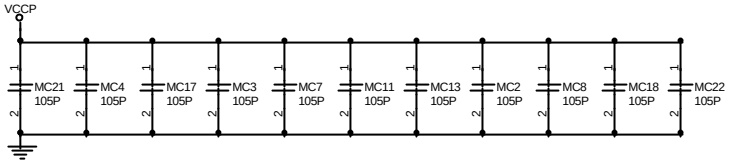

For VCCP

11 PCS 105P Cap. Placement

9 PCS 4.7U/0805 Cap. Placement

1 PCS 10U/1206 Cap. Placement

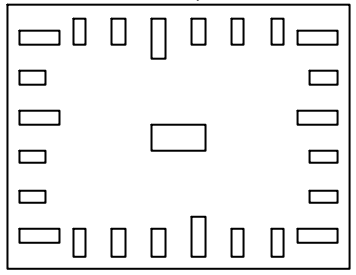

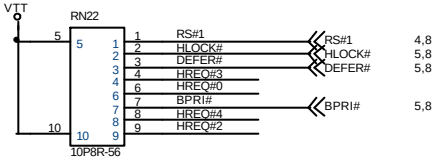

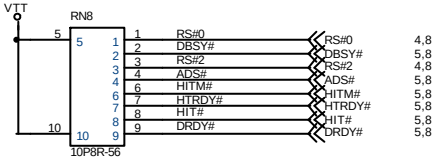

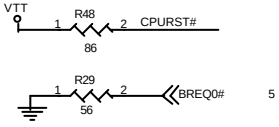

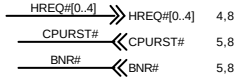

Micro-Star	Title: MS-6315	Rev: 20A
Document Number: GTL Termination		
Last Revision Date: Friday, September 22, 2000	Sheet 6 of 34	

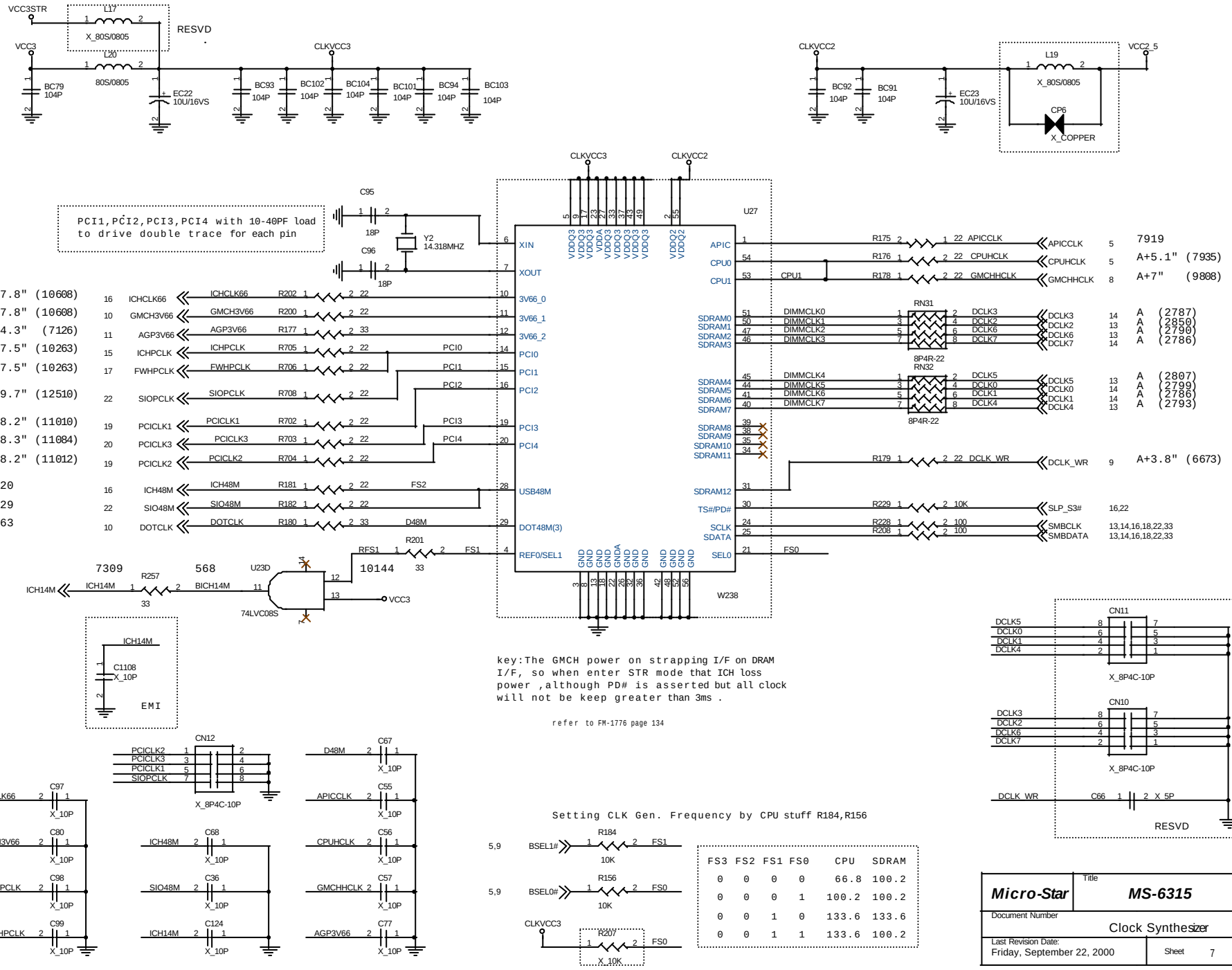
VCC3STR
L17
X_80S/0805
RESVD
VCC3
L20
80S/0805
BC79 104P
EC22 10U/16VS
CLKVCC3
BC93 104P
BC102 104P
BC104 104P
BC101 104P
BC94 104P
BC103 104P
CLKVCC2
BC92 104P
BC91 104P
EC23 10U/16VS
L19
X_80S/0805
VCC2_5
CP6
X_COPPER
PCI1,PCI2,PCI3,PCI4 with 10-40PF load to drive double trace for each pin
C95
18P
Y2
14.318MHZ
C96
18P
U27
XIN
XOUT
3V66_0
3V66_1
3V66_2
PCI0
PCI1
PCI2
PCI3
PCI4
USB48M
DOT48M(3)
REF0/SEL1
APIC
CPU0
CPU1
SDRAM0
SDRAM1
SDRAM2
SDRAM3
SDRAM4
SDRAM5
SDRAM6
SDRAM7
SDRAM8
SDRAM9
SDRAM10
SDRAM11
SDRAM12
TS#/PD#
SCLK
SDATA
SEL0
W238
A+7.8" (10608)
A+7.8" (10608)
A+4.3" (7126)
A+7.5" (10263)
A+7.5" (10263)
A+9.7" (12510)
A+8.2" (11010)
A+8.3" (11084)
A+8.2" (11012)
9720
9729
7563
ICHCLK66
GMCH3V66
AGP3V66
ICHPCLK
FWHPCLK
SIOPCLK
PCICLK1
PCICLK3
PCICLK2
ICH48M
SIO48M
DOTCLK
R202 22
R200 22
R177 33
R705 22
R706 22
R708 22
R702 22
R703 22
R704 22
R181 22
R182 22
R180 33
FS2
D48M
FS1
R201 33
RFS1
10144
7309
568
U23D
74LVC08S
R257 33
ICH14M
BICH14M
VCC3
R175 22 APICCLK
R176 22 CPUHCLK
R178 22 GMCHHCLK
CPU1
RN31
DIMMCLK0
DIMMCLK1
DIMMCLK2
DIMMCLK3
8P4R-22
RN32
DIMMCLK4
DIMMCLK5
DIMMCLK6
DIMMCLK7
8P4R-22
DCLK3
DCLK2
DCLK6
DCLK7
DCLK5
DCLK0
DCLK1
DCLK4
R179 22 DCLK_WR
R229 10K
R228 100
R208 100
SLP_S3#
SMBCLK
SMBDATA
7919
A+5.1" (7935)
A+7" (9808)
A (2787)
A (2850)
A (2790)
A (2786)
A (2807)
A (2799)
A (2786)
A (2793)
A+3.8" (6673)
16,22
13,14,16,18,22,33
13,14,16,18,22,33
key:The GMCH power on strapping I/F on DRAM I/F, so when enter STR mode that ICH loss power ,although PD# is asserted but all clock will not be keep greater than 3ms .
refer to FM-1776 page 134
ICH14M
C1108 X_10P
EMI
CN12
X_8P4C-10P
CN11
X_8P4C-10P
CN10
X_8P4C-10P
DCLK_WR
C66 X_5P
RESVD
C97 X_10P
C80 X_10P
C98 X_10P
C99 X_10P
C68 X_10P
C36 X_10P
C124 X_10P
C67 X_10P
C55 X_10P
C56 X_10P
C57 X_10P
C77 X_10P
Setting CLK Gen. Frequency by CPU stuff R184,R156
BSEL1#
BSEL0#
R184 10K
R156 10K
R207 X_10K
FS3 FS2 FS1 FS0 CPU SDRAM
0 0 0 0 66.8 100.2
0 0 0 1 100.2 100.2
0 0 1 0 133.6 133.6
0 0 1 1 133.6 100.2
Micro-Star
Title
MS-6315
Rev
20A
Document Number
Clock Synthesizer
Last Revision Date:
Friday, September 22, 2000
Sheet 7 of 34

82815, PART 1 : HOST INTERFACE

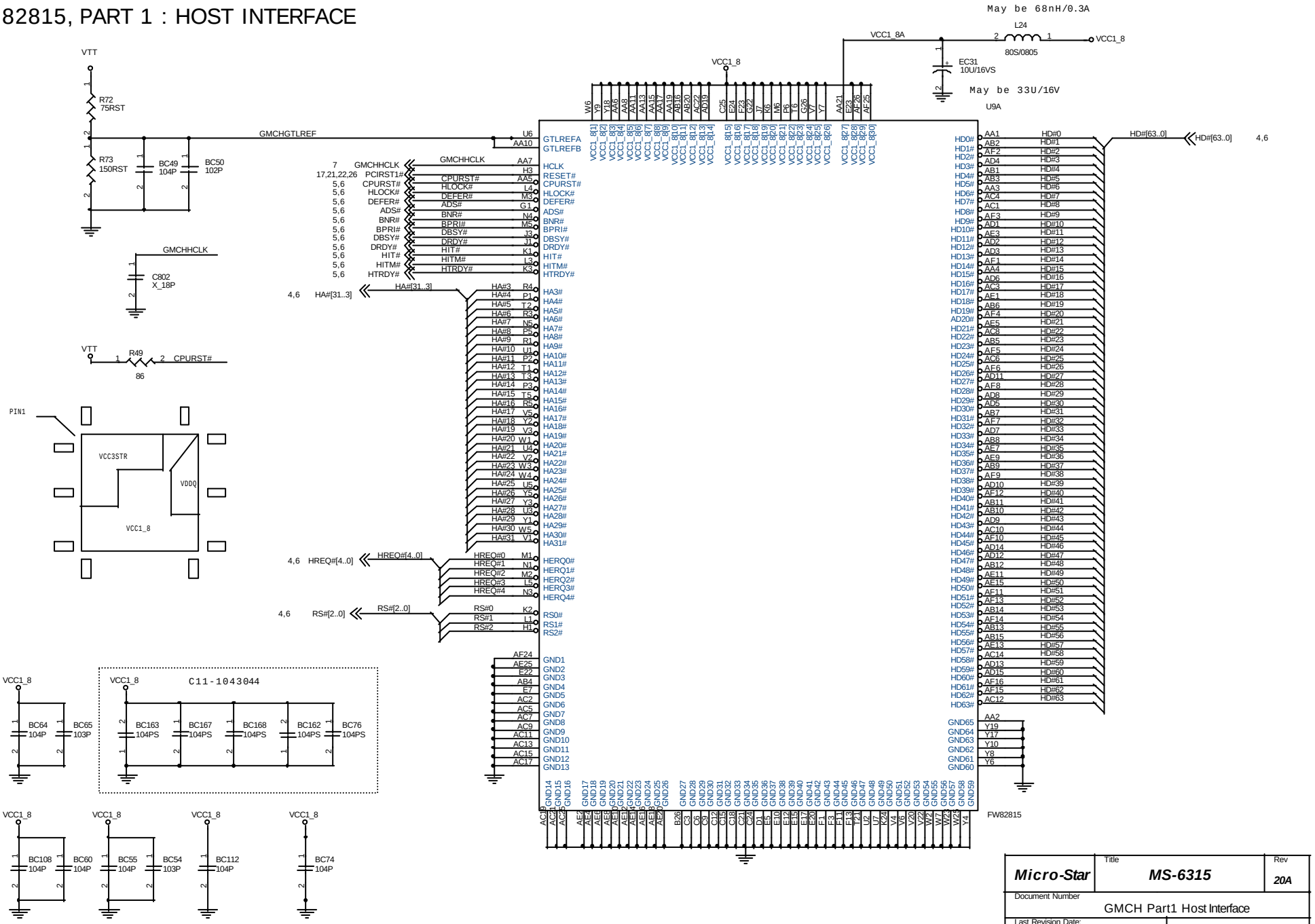

Micro-Star	Title: MS-6315		Rev: 20A
Document Number: GMCH Part1 Host Interface			
Last Revision Date: Friday, September 22, 2000		Sheet 8 of 34	

GMCH, PART 2 : SYSTEM MEMORY

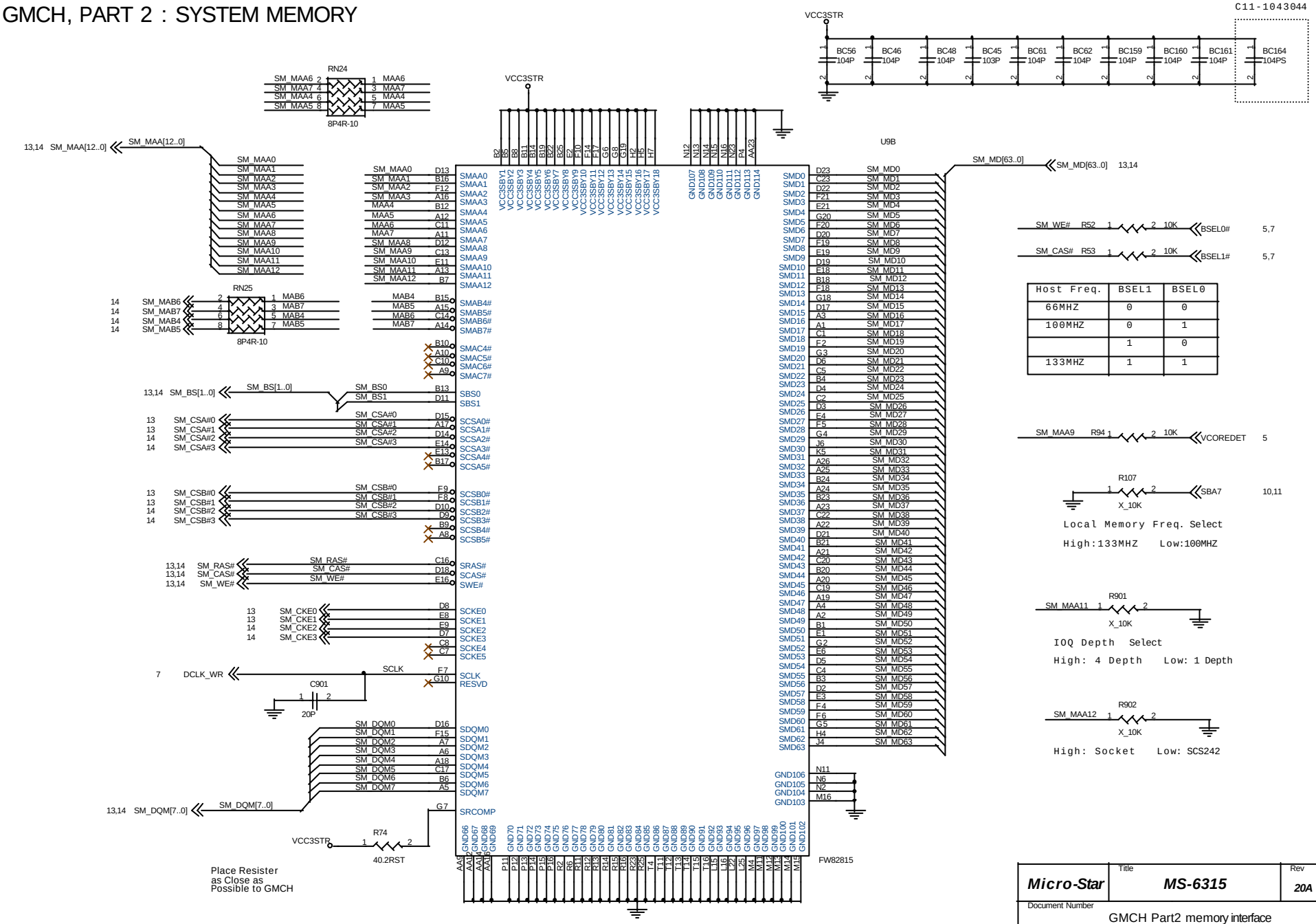

GMCH PART 3 : AGP & VIDEO Interface & HUB link

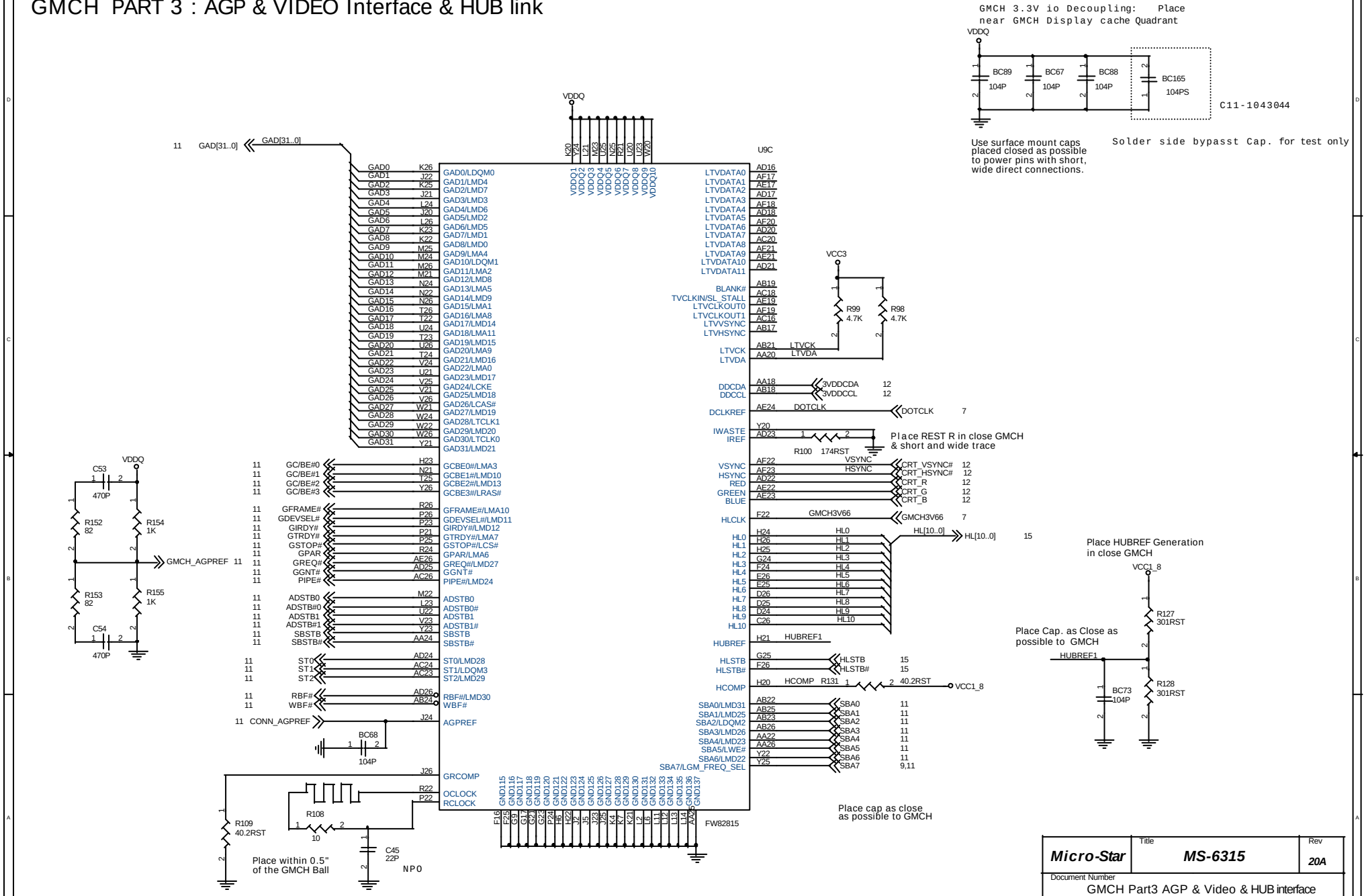

Micro-Star	Title: MS-6315	Rev: 20A
Document Number: GMCH Part3 AGP & Video & HUB interface		
Last Revision Date: Friday, September 22, 2000	Sheet 10 of 34	

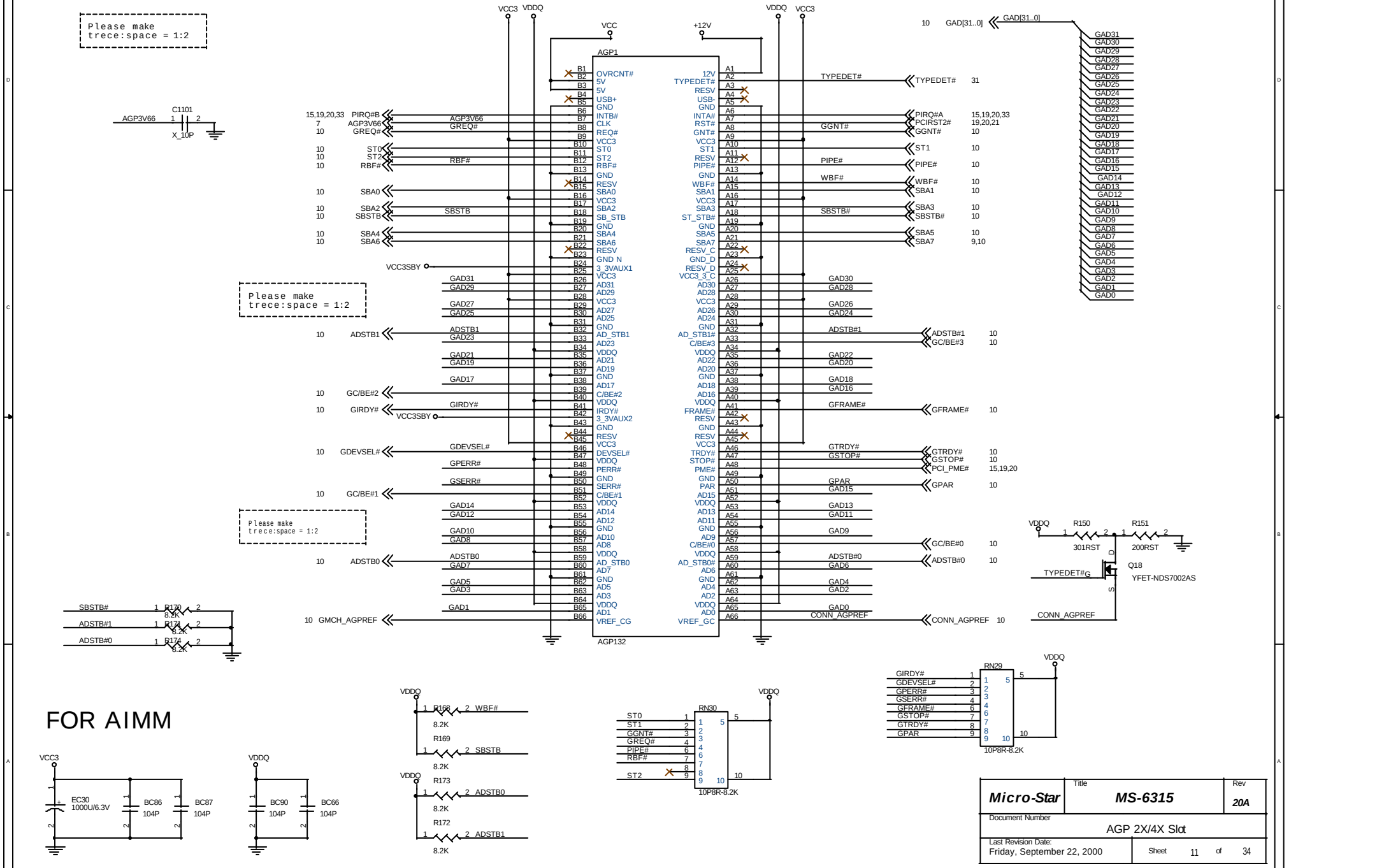

Micro-Star	Title: MS-6315		Rev: 20A
Document Number: AGP 2X/4X Slot			
Last Revision Date: Friday, September 22, 2000		Sheet 11 of 34	

Video Connector

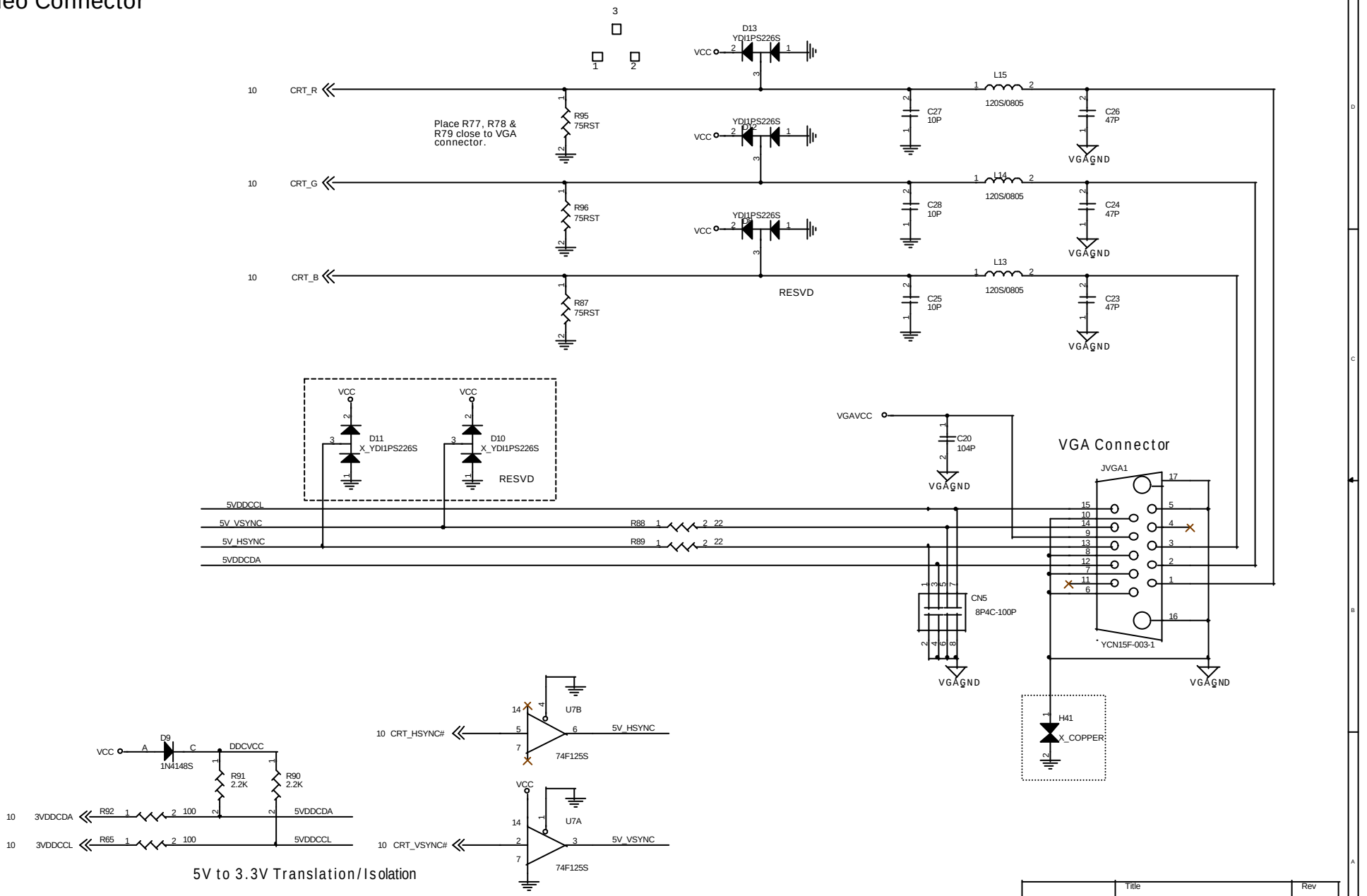

5V to 3.3V Translation/Isolation

Micro-Star	Title: MS-6315		Rev: 20A
Document Number: Video Connector			
Last Revision Date: Friday, September 22, 2000		Sheet 12 of 34	

DIMM1

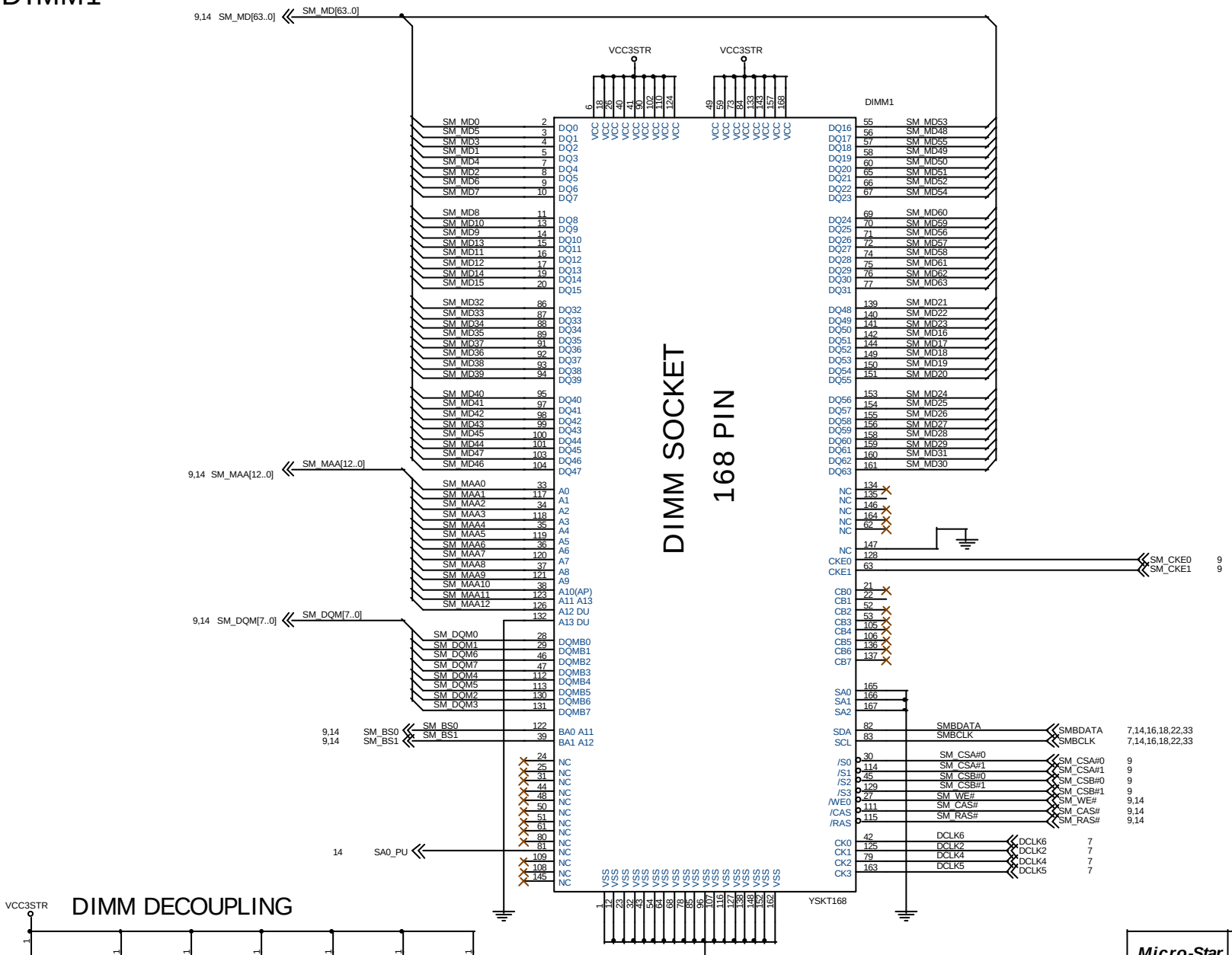

DIMM DECOUPLING

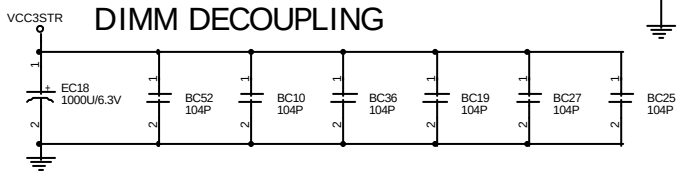

Micro-Star	Title: MS-6315	Rev: 20A
Document Number: System Memory: DIMM1		
Last Revision Date: Friday, September 22, 2000	Sheet 13 of 34	

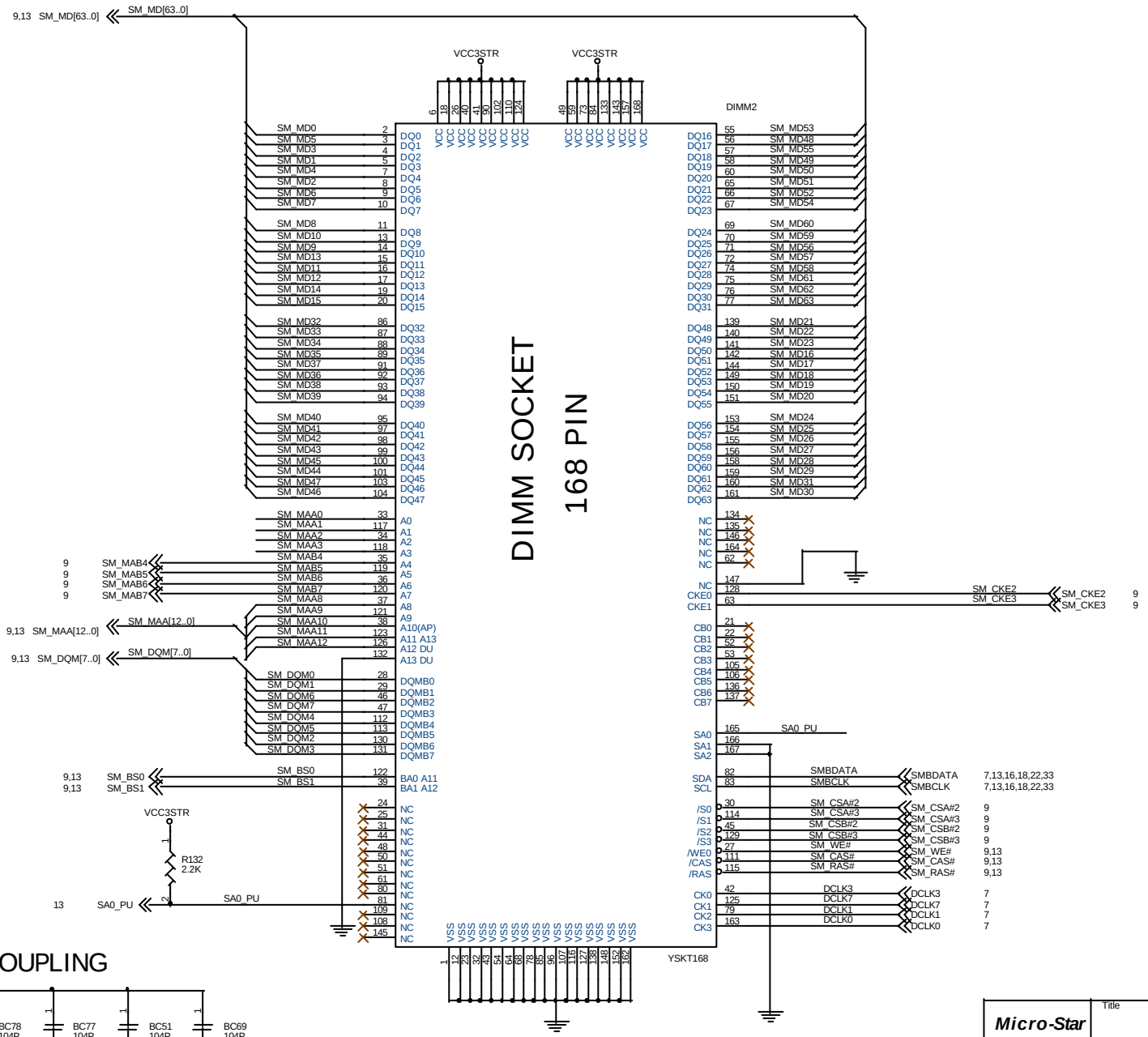

DIMM DECOUPLING

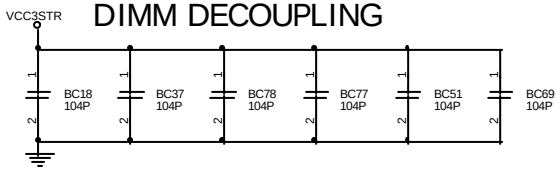

Micro-Star	Title: MS-6315	Rev: 20A
Document Number: System Memory: DIMM2		
Last Revision Date: Friday, September 22, 2000	Sheet 14 of 34	

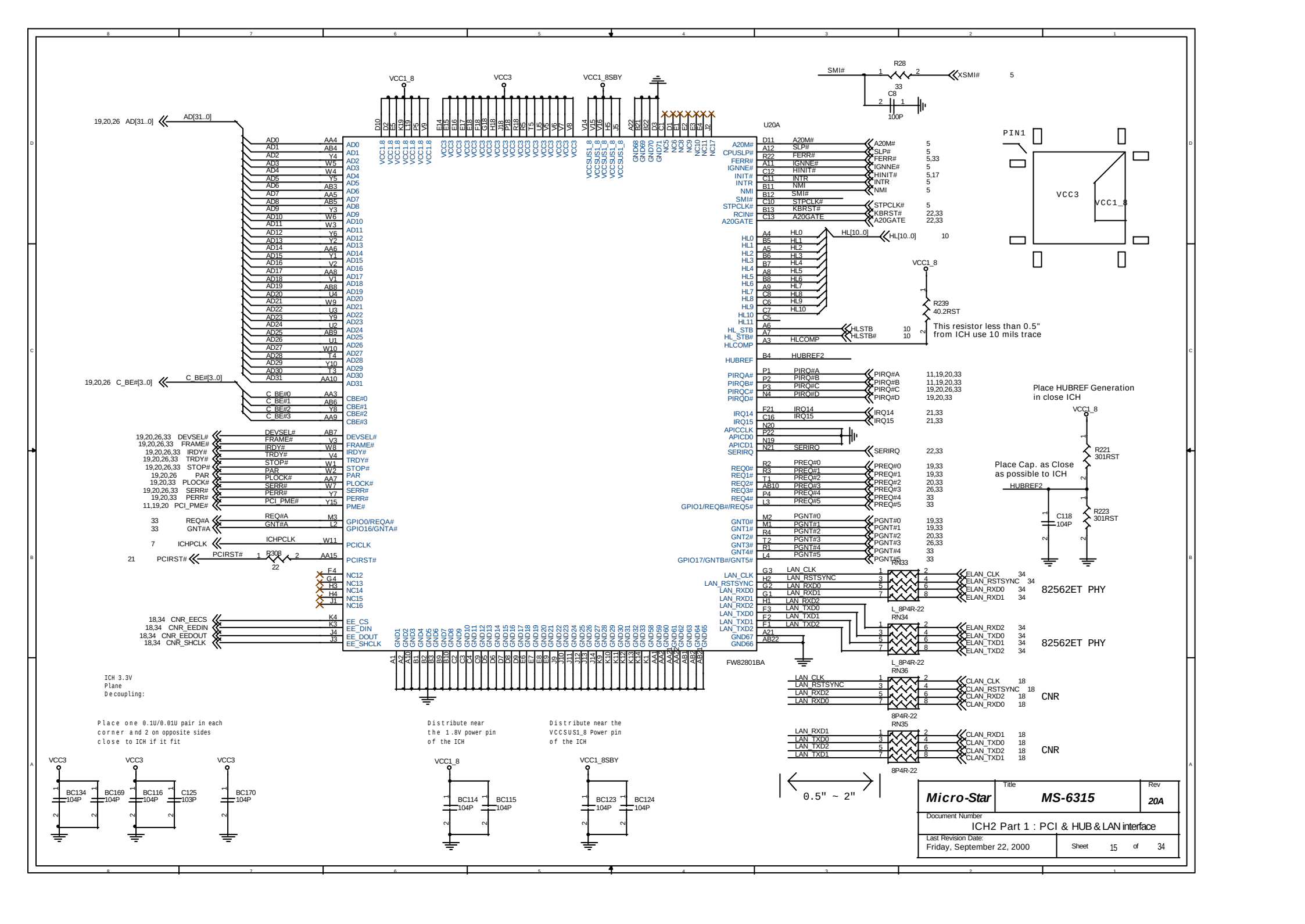
VCC1_8
VCC3
VCC1_8SBY
SMI#
R28
33
XSMI#
C8
100P
PIN1
U20A
FW82801BA
AD[31..0]
C_BE#[3..0]
HL[10..0]
R239
40.2RST
This resistor less than 0.5" from ICH use 10 mils trace
Place HUBREF Generation in close ICH
Place Cap. as Close as possible to ICH
R221
301RST
R223
301RST
C118
104P
HUBREF2
82562ET PHY
82562ET PHY
CNR
CNR
RN33
RN34
RN35
RN36
L_8P4R-22
8P4R-22
0.5" ~ 2"
ICH 3.3V Plane Decoupling:
Place one 0.1U/0.01U pair in each corner and 2 on opposite sides close to ICH if it fit
Distribute near the 1.8V power pin of the ICH
Distribute near the VCCSUS1_8 Power pin of the ICH
BC134 104P
BC169 104P
BC116 104P
C125 103P
BC170 104P
BC114 104P
BC115 104P
BC123 104P
BC124 104P
Micro-Star
Title
MS-6315
Rev
20A
Document Number
ICH2 Part 1 : PCI & HUB & LAN interface
Last Revision Date:
Friday, September 22, 2000
Sheet 15 of 34

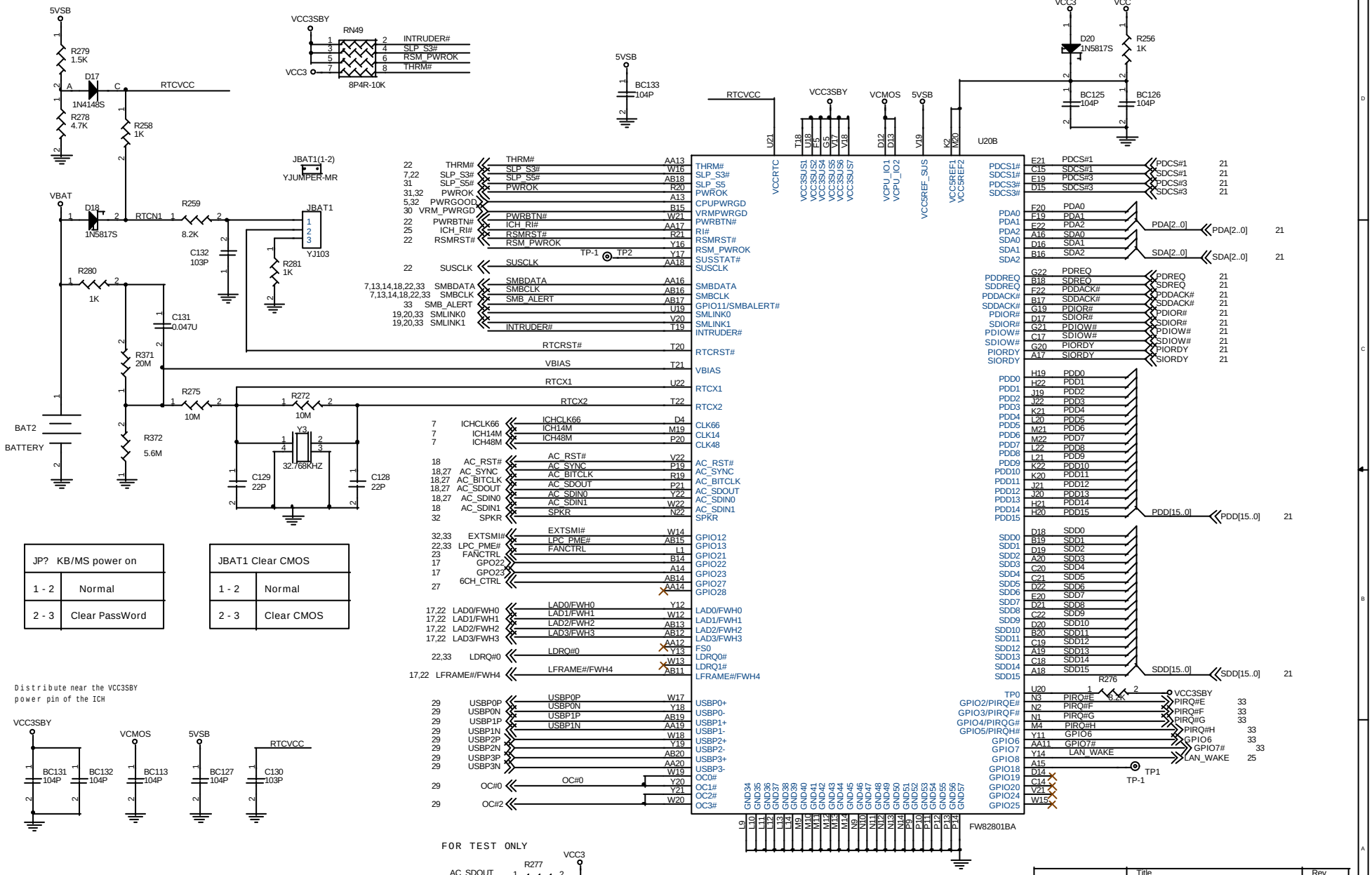
5VSB
R279 1.5K
D17 1N4148S
R278 4.7K
RTCVCC
R258 1K
VBAT
D18 1N5817S
RTCN1
R259 8.2K
C132 103P
JBAT1(1-2)
YJUMPER-MR
JBAT1
YJ103
R281 1K
R280 1K
C131 0.047U
R371 20M
R275 10M
R272 10M
R372 5.6M
BAT2
BATTERY
Y3 32.768KHZ
C129 22P
C128 22P
VCC3SBY
RN49
8P4R-10K
INTRUDER#
SLP_S3#
RSM_PWROK
THRM#
VCC3
BC133 104P
U20B
FW82801BA
D20 1N5817S
R256 1K
BC125 104P
BC126 104P
JP? KB/MS power on
1 - 2 Normal
2 - 3 Clear PassWord
JBAT1 Clear CMOS
1 - 2 Normal
2 - 3 Clear CMOS
Distribute near the VCC3SBY power pin of the ICH
BC131 104P
BC132 104P
BC113 104P
BC127 104P
C130 103P
VCMOS
RTCVCC
FOR TEST ONLY
AC_SDOUT
R277 X_1K
SPKR
R312 X_1K
R276 8.2K
TP-1
TP1
Micro-Star
MS-6315
20A
ICH2 Part 2 : RTC & IDE & AC97 & USB interface
Friday, September 22, 2000
Sheet 16 of 34

Firware Hub (FWH)

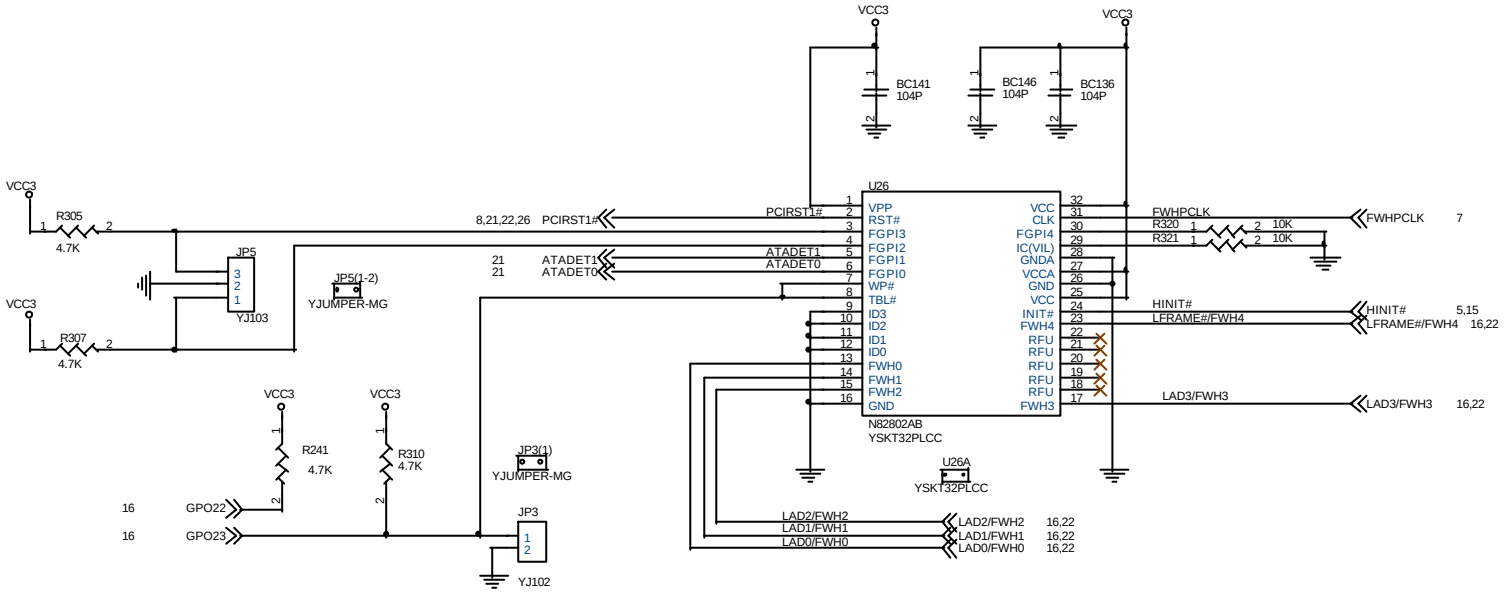

JP5 BIOS Update Configuration	
1 - 2	Normal Mode
2 - 3	Boot auto clear CMOS
OPEN	Flash from FDD

*

JP3 BIOS Update	
SHORT	Locked
OPEN	Unlocked

Micro-Star	Title: MS-6315	Rev: 20A
Document Number: Firware HUB (FWH)		
Last Revision Date: Friday, September 22, 2000	Sheet 17 of 34	

CNR RISER

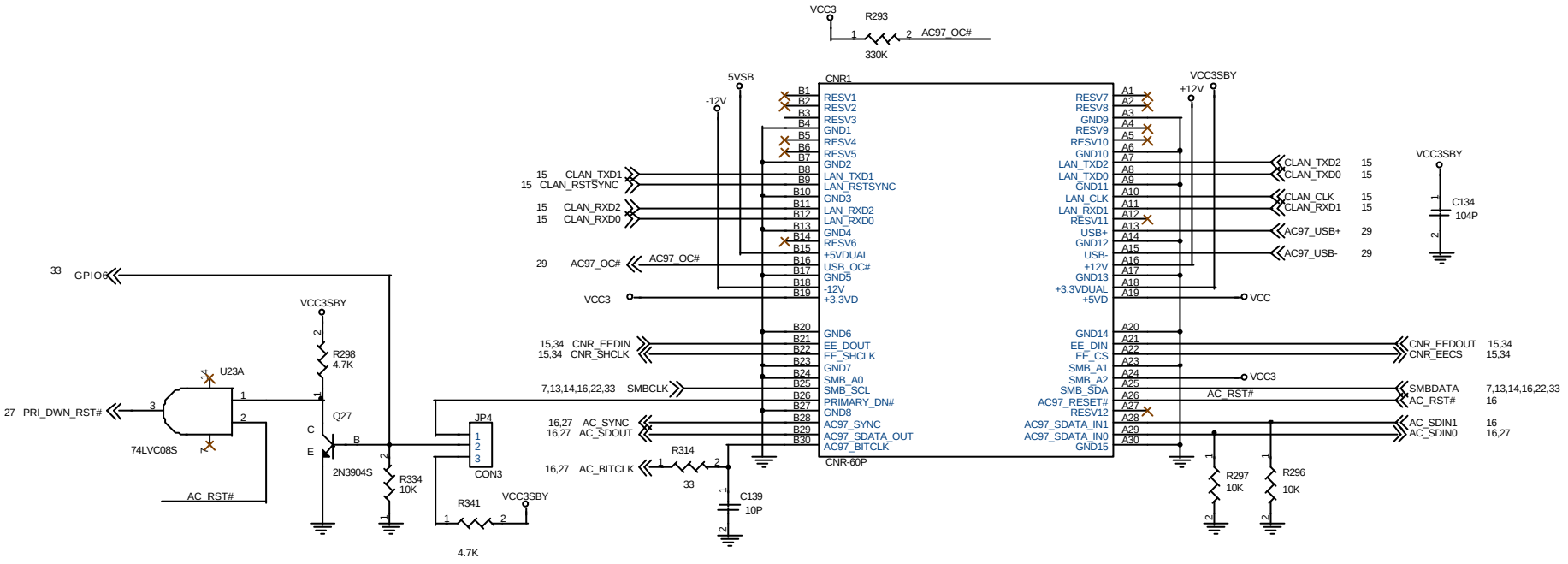

JP4	AUDIO DOWN
1 - 2	Auto mode
2 - 3	Primary audio codec onboard

Micro-Star	Title: MS-6315	Rev: 20A
Document Number: CNR Slot		
Last Revision Date: Wednesday, October 11, 2000	Sheet 18 of 34	

PCI Connectors

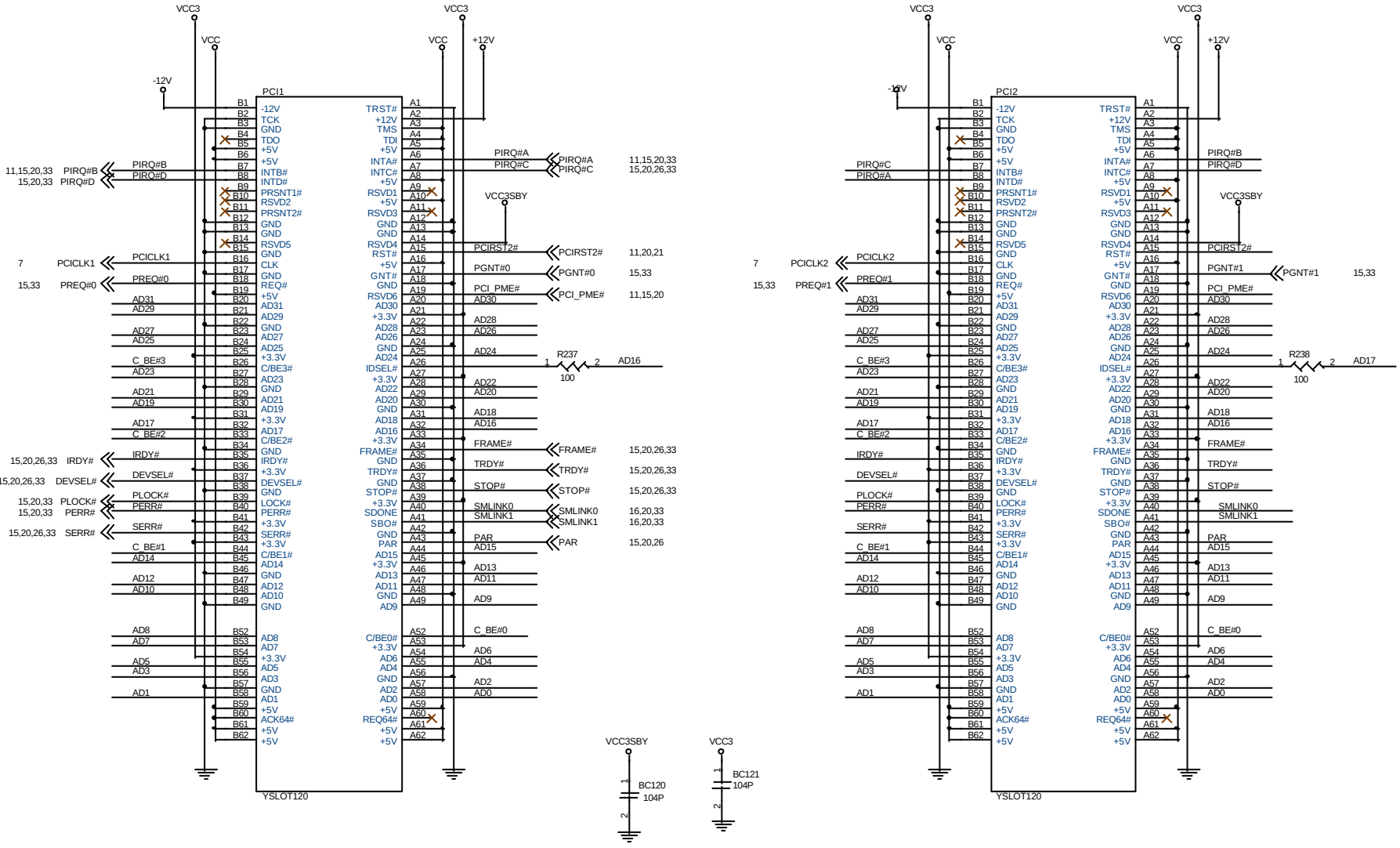

15,20,26 AD[31..0] ← AD[31..0]

15,20,26 C_BE#[3..0] ← C_BE#[3..0]

Micro-Star	Title: MS-6315	Rev: 20A
Document Number: PCI Slot 1 & 2		
Last Revision Date: Friday, September 22, 2000	Sheet 19 of 34	

PCI Slot

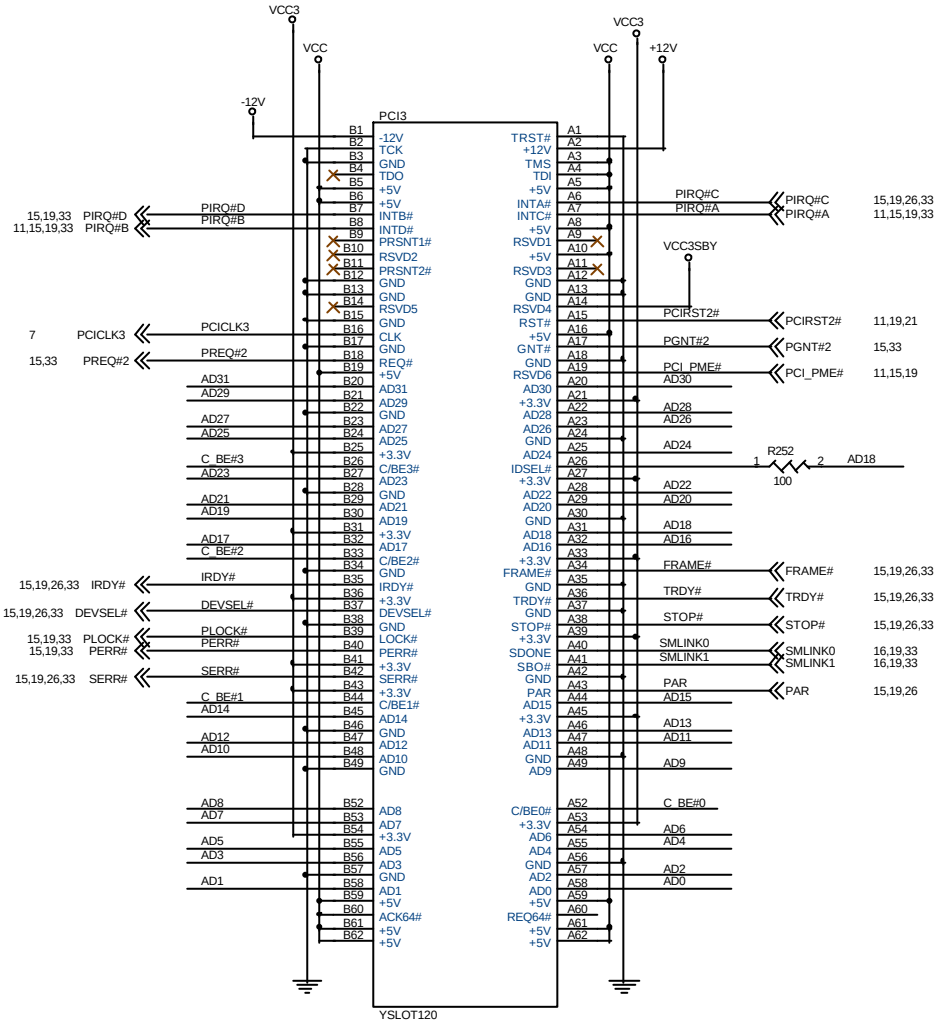

15,19,26 AD[31..0] AD[31..0]

15,19,26 C_BE#[3..0] C_BE#[3..0]

Micro-Star	Title: MS-6315	Rev: 20A
Document Number: PCI Slot 3		
Last Revision Date: Friday, September 22, 2000	Sheet 20 of 34	

ATA66 IDE CONNECTORS

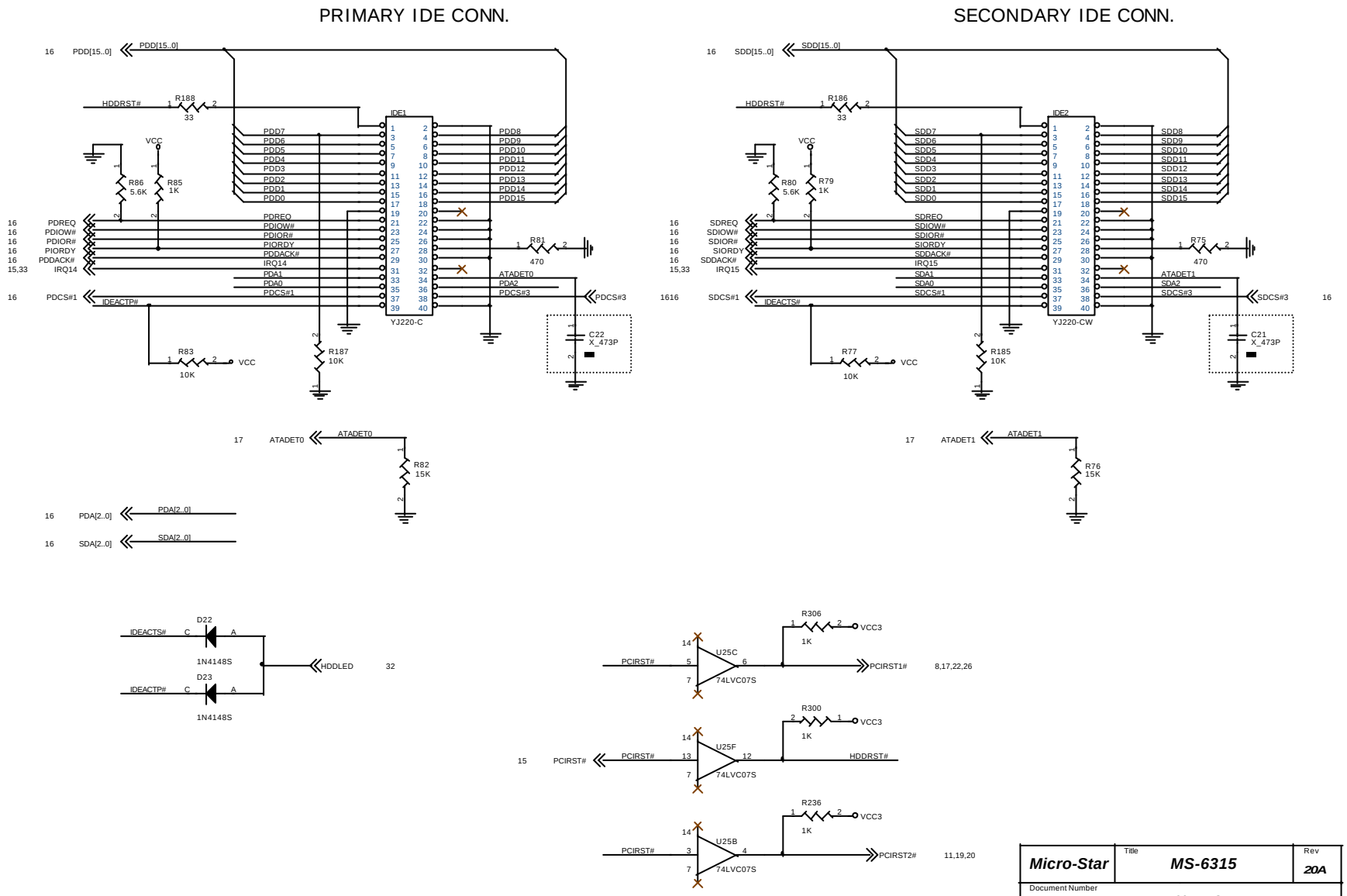

Micro-Star	Title: MS-6315		Rev: 20A
Document Number: ATA 100 IDE Connector			
Last Revision Date: Friday, September 22,2000		Sheet 21 of 34	

Super I/O

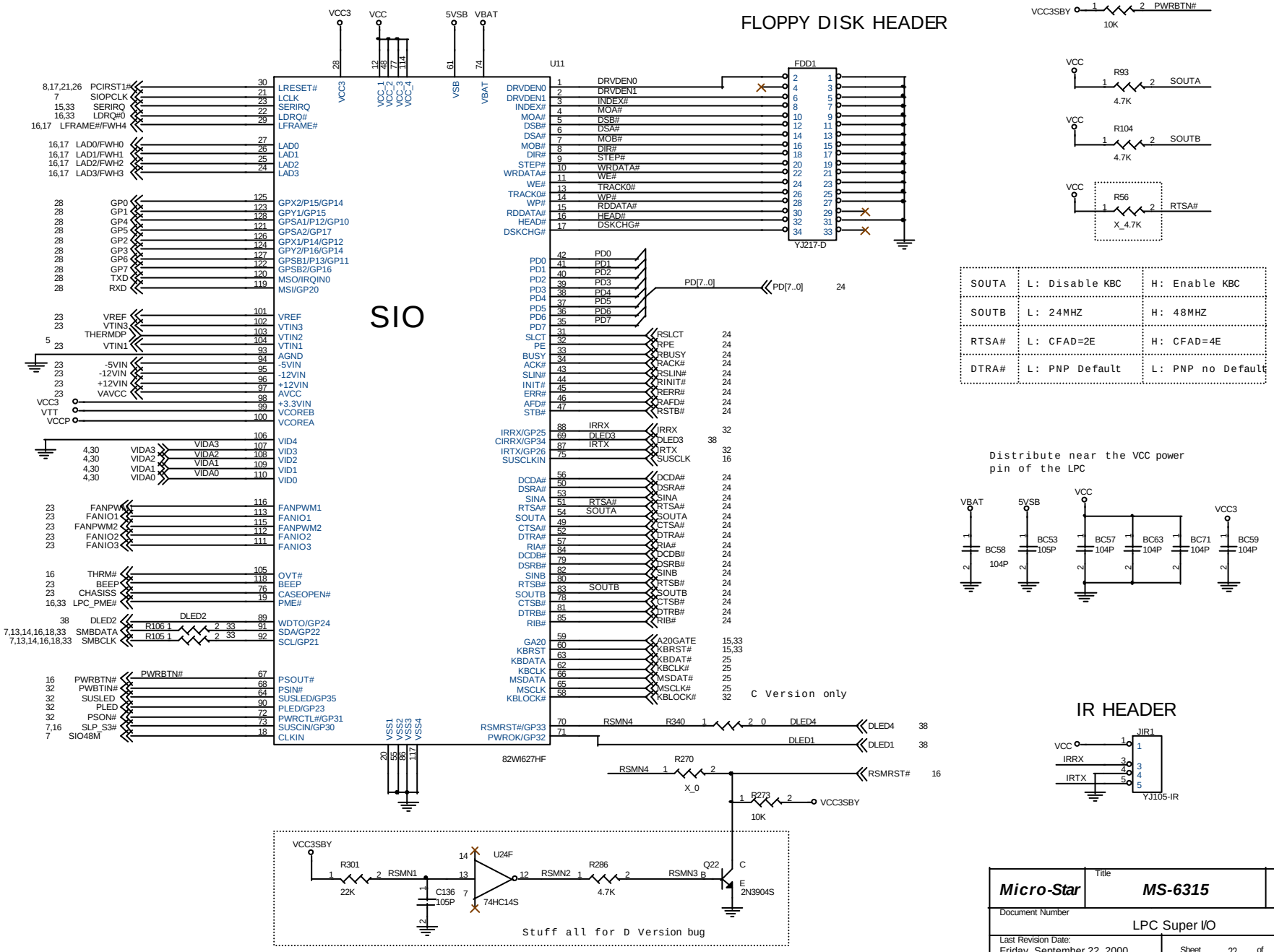

Micro-Star	Title: MS-6315	Rev: 20A
Document Number: LPC Super I/O		
Last Revision Date: Friday, September 22, 2000	Sheet 22 of 34	

Hardware Monitor

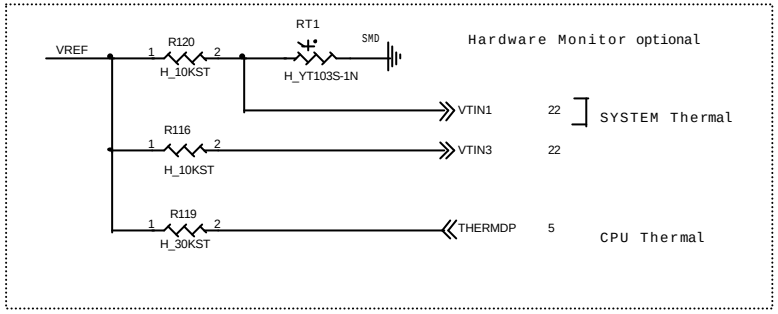

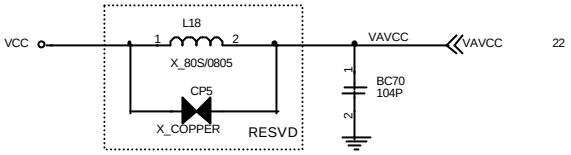

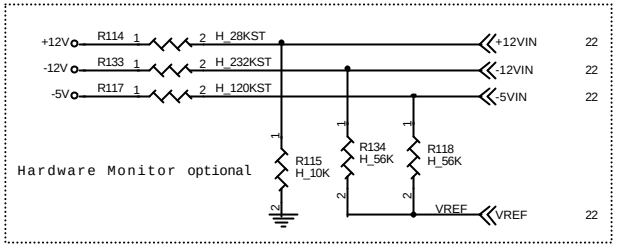

Chasiss Intrusion Header

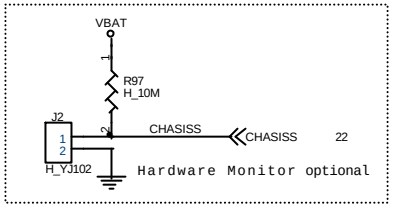

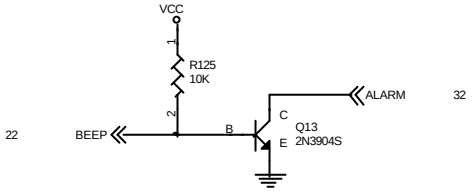

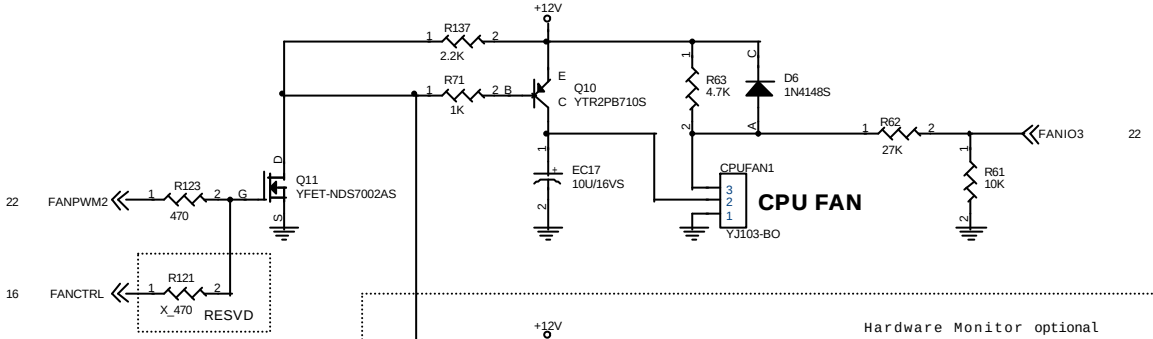

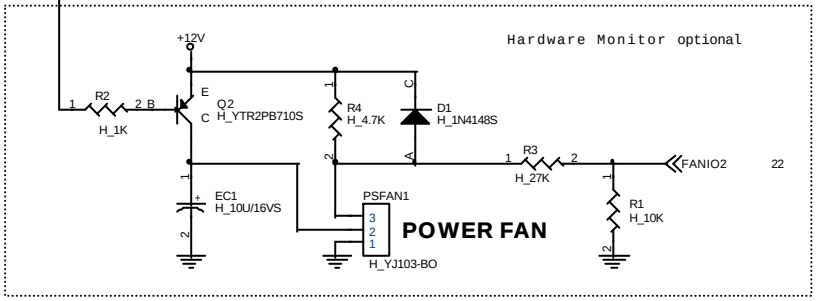

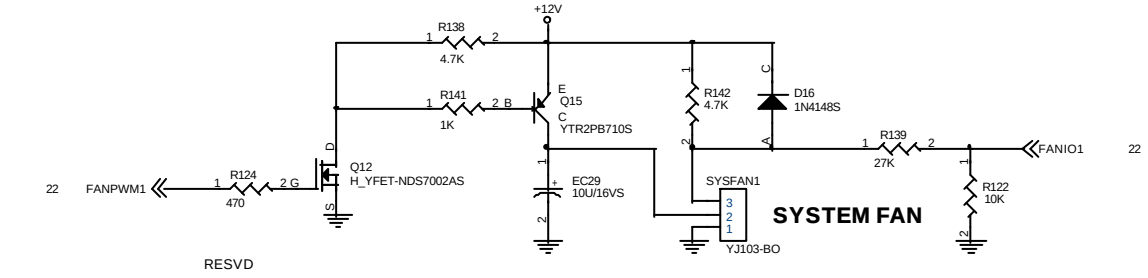

Micro-Star	Title: MS-6315	Rev: 20A
Document Number: Hardware Monitor		
Last Revision Date: Friday, September 22, 2000	Sheet 23 of 34	

Parallel Port / COM1port & COM2 Header

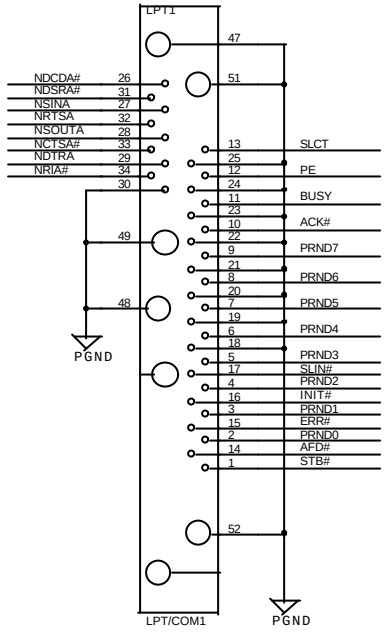

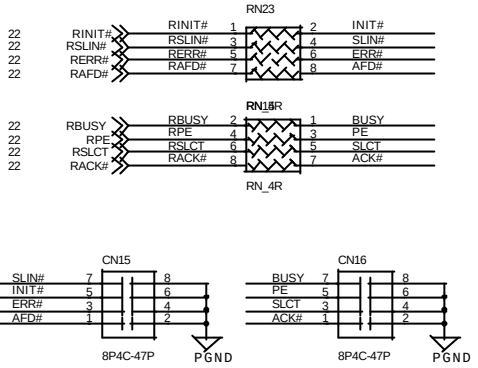

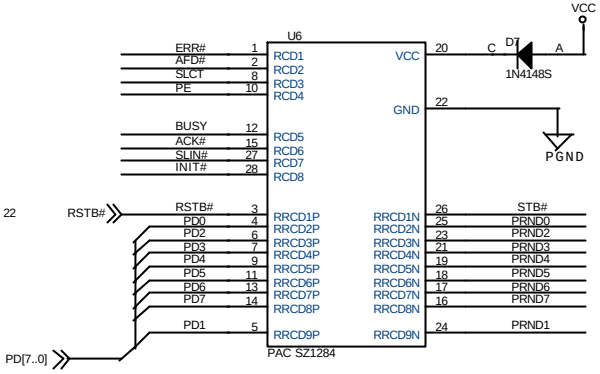

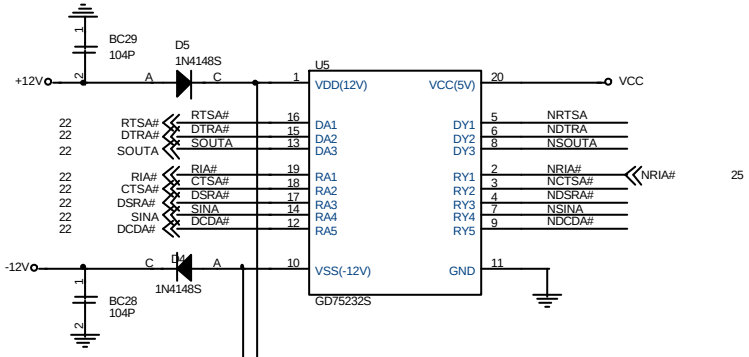

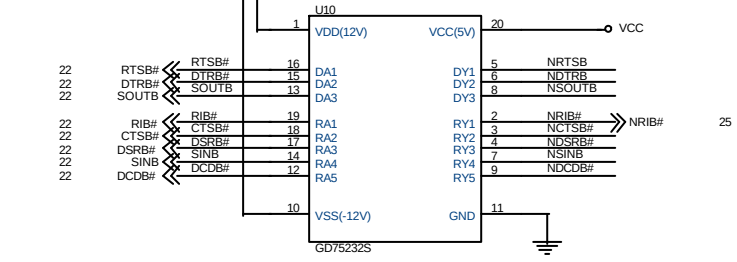

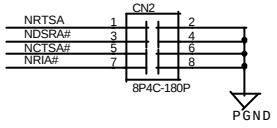

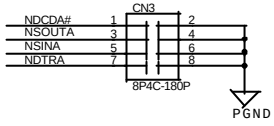

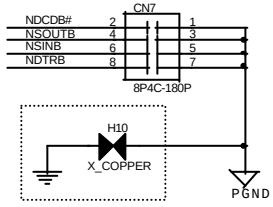

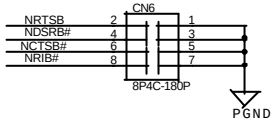

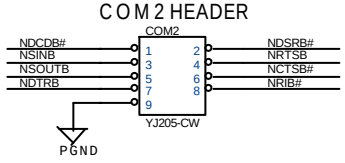

Micro-Star	Title: MS-6315	Rev: 20A
Document Number: Parallel Port Header		
Last Revision Date: Friday, September 22, 2000	Sheet 24 of 34	

KEYBOARD/MOUSE PORTS

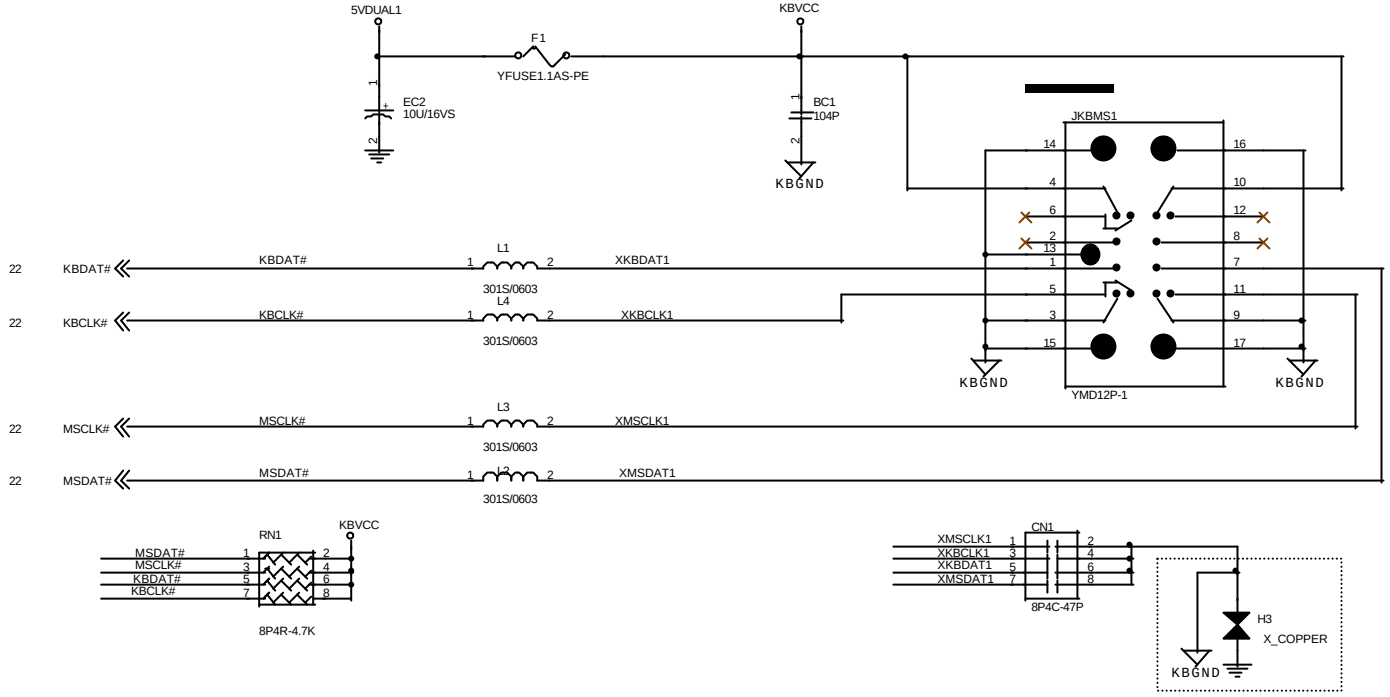

LAN WAKEUP HEADER

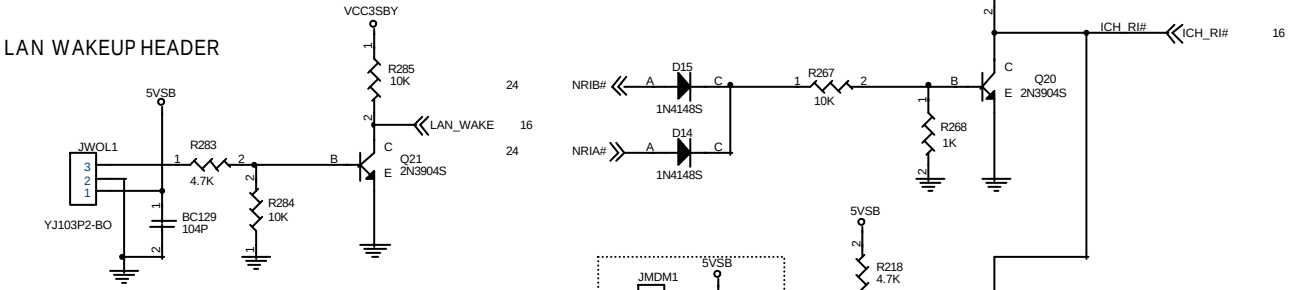

INTERNAL MODEM WAKEUP HEADER

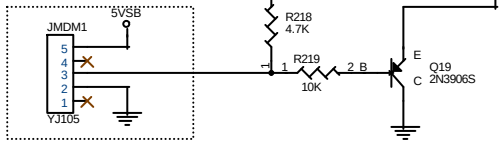

Micro-Star	Title: MS6315	Rev: 20A
	Document Number: Keyboard board / Mouse port	
Last Revision Date: Friday, September 22, 2000	Sheet 25 of 34	

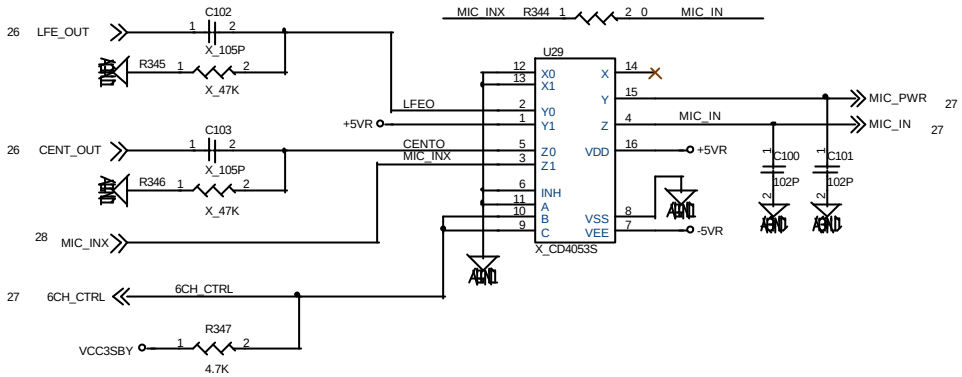

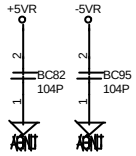

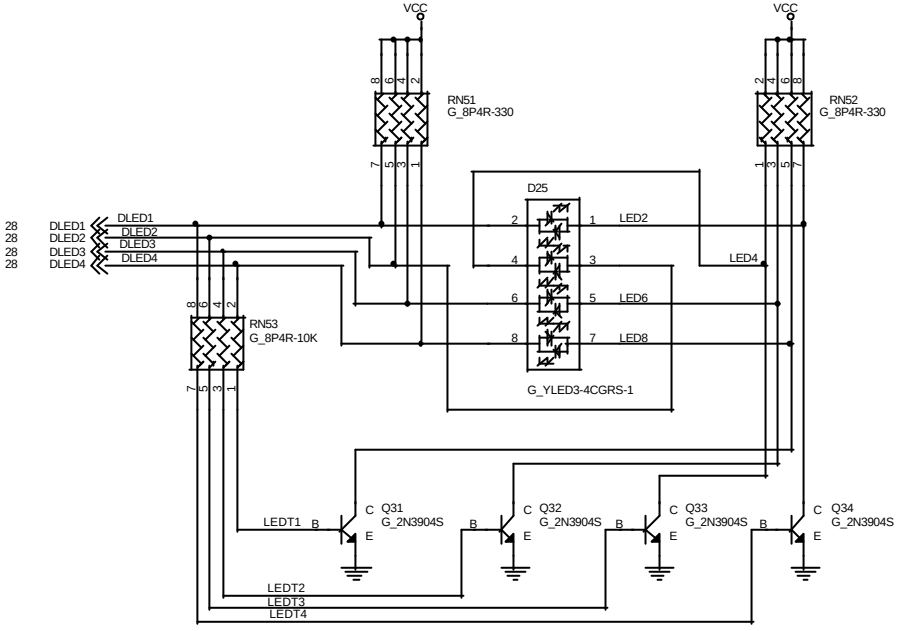

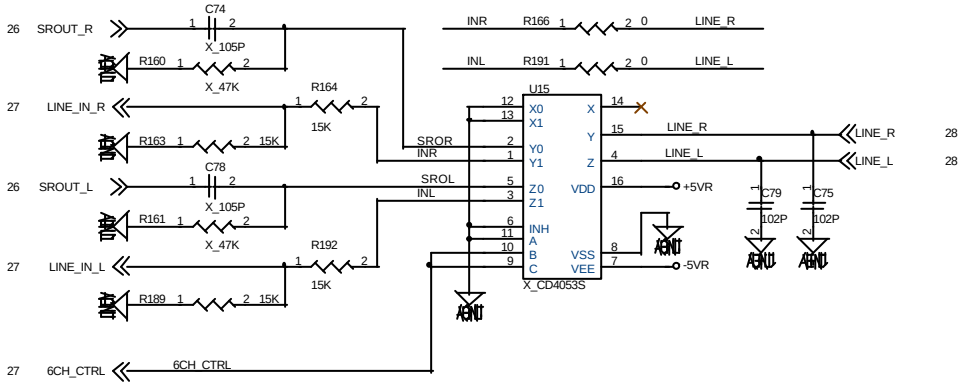

Micro-Star	Title: MS6315	Rev: 20A
	Document Number: PCI Hardware Audio	
Last Revision Date: Friday, September 22, 2000	Sheet 26 of 34	

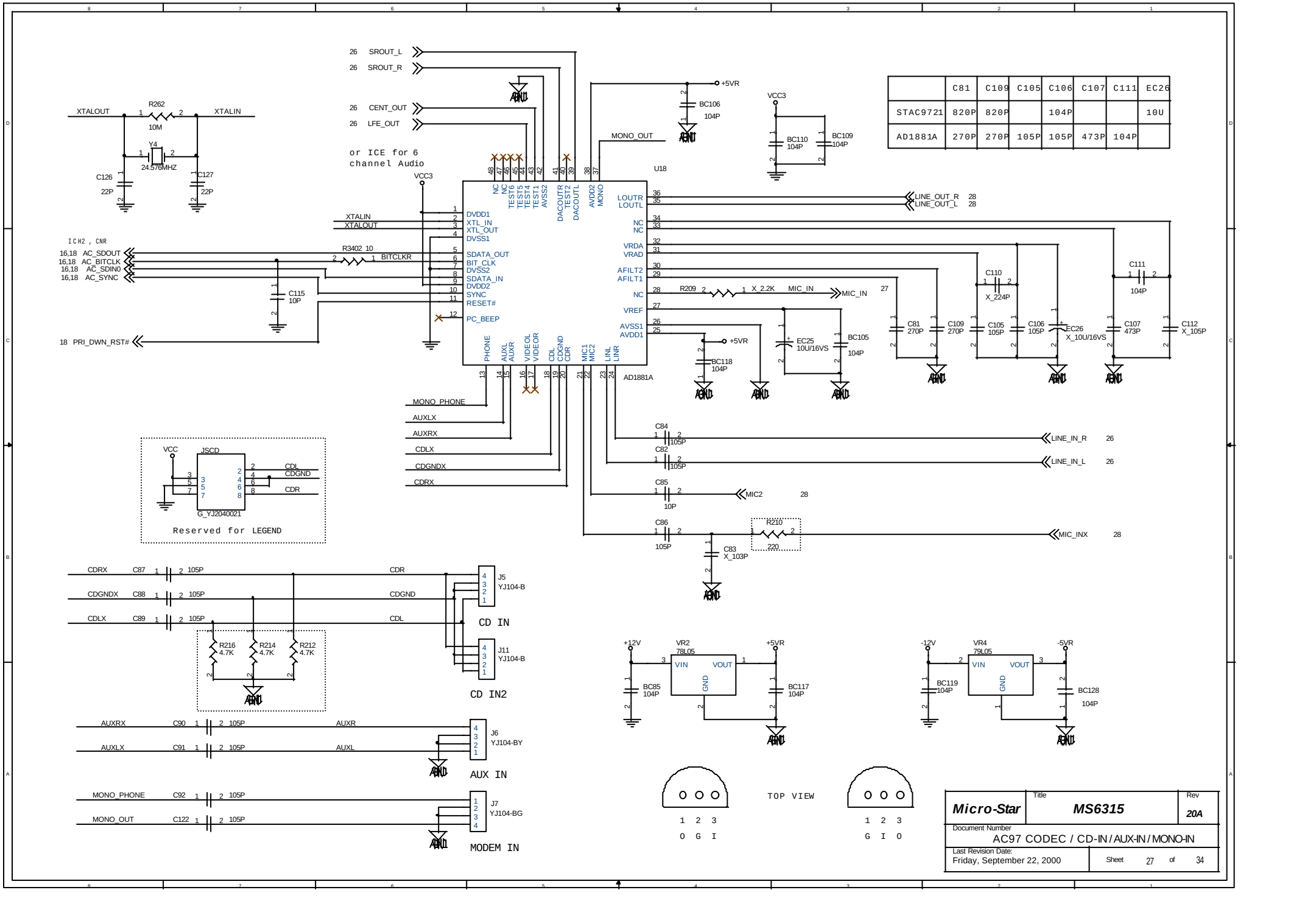

	C81	C109	C105	C106	C107	C111	EC26
STAC9721	820P	820P		104P			10U
AD1881A	270P	270P	105P	105P	473P	104P	

Micro-Star	Title: MS6315		Rev: 20A
	Document Number: AC97 CODEC / CD-IN / AUX-IN / MONO-IN		
	Last Revision Date: Friday, September 22, 2000	Sheet 27 of 34	

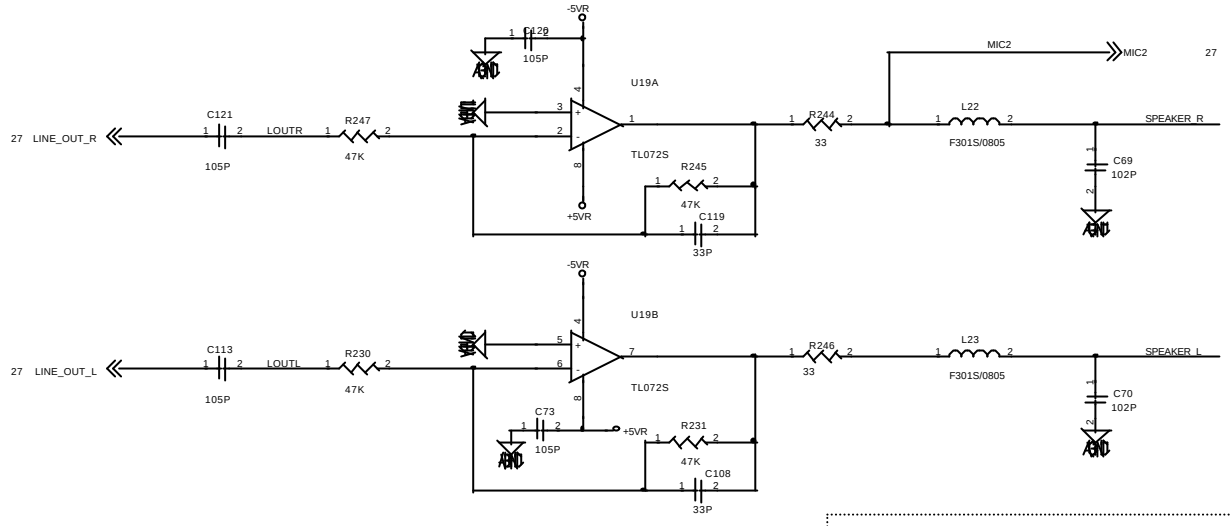

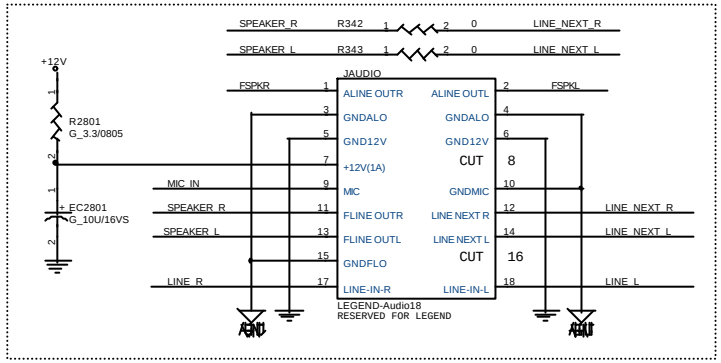

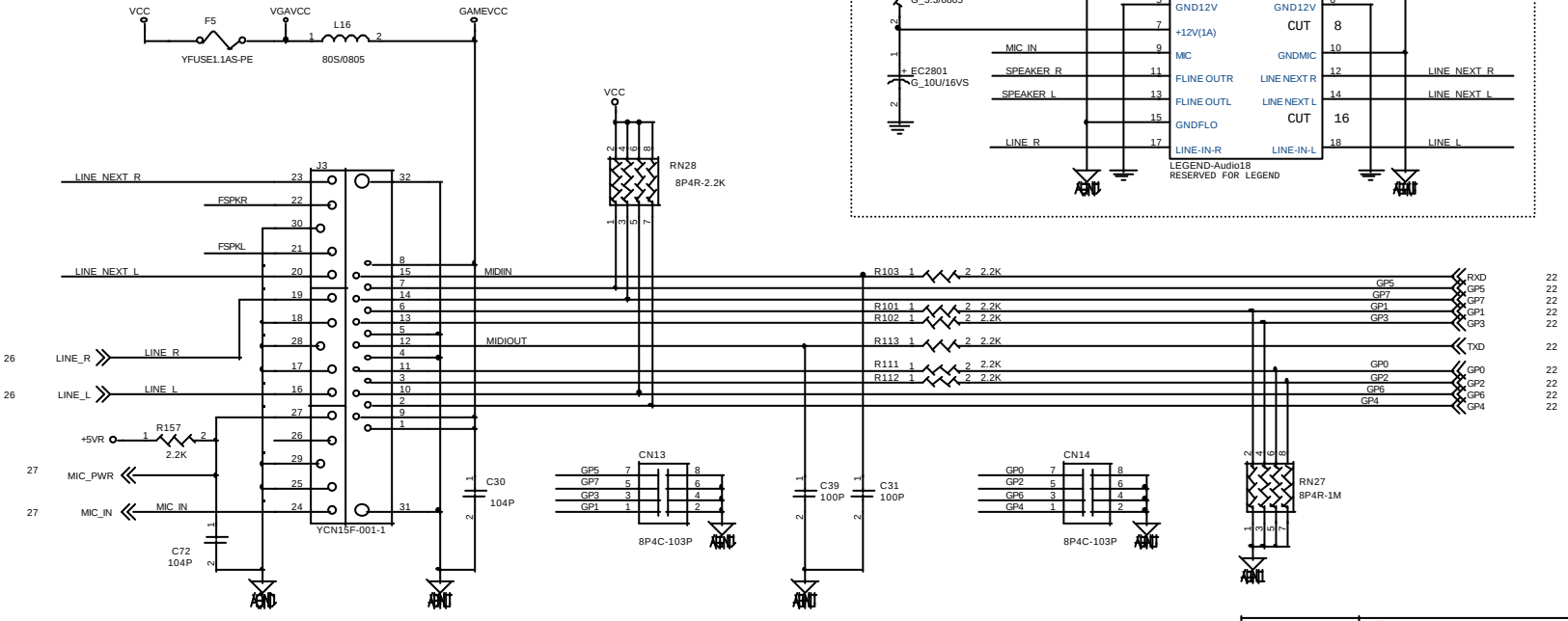

GAME PORT HEADER

Micro-Star	Title: MS6315		Rev: 20A
Document Number: Audio Amplifier & Game port Connector			
Last Revision Date: Friday, September 22,2000		Sheet 28 of 34	

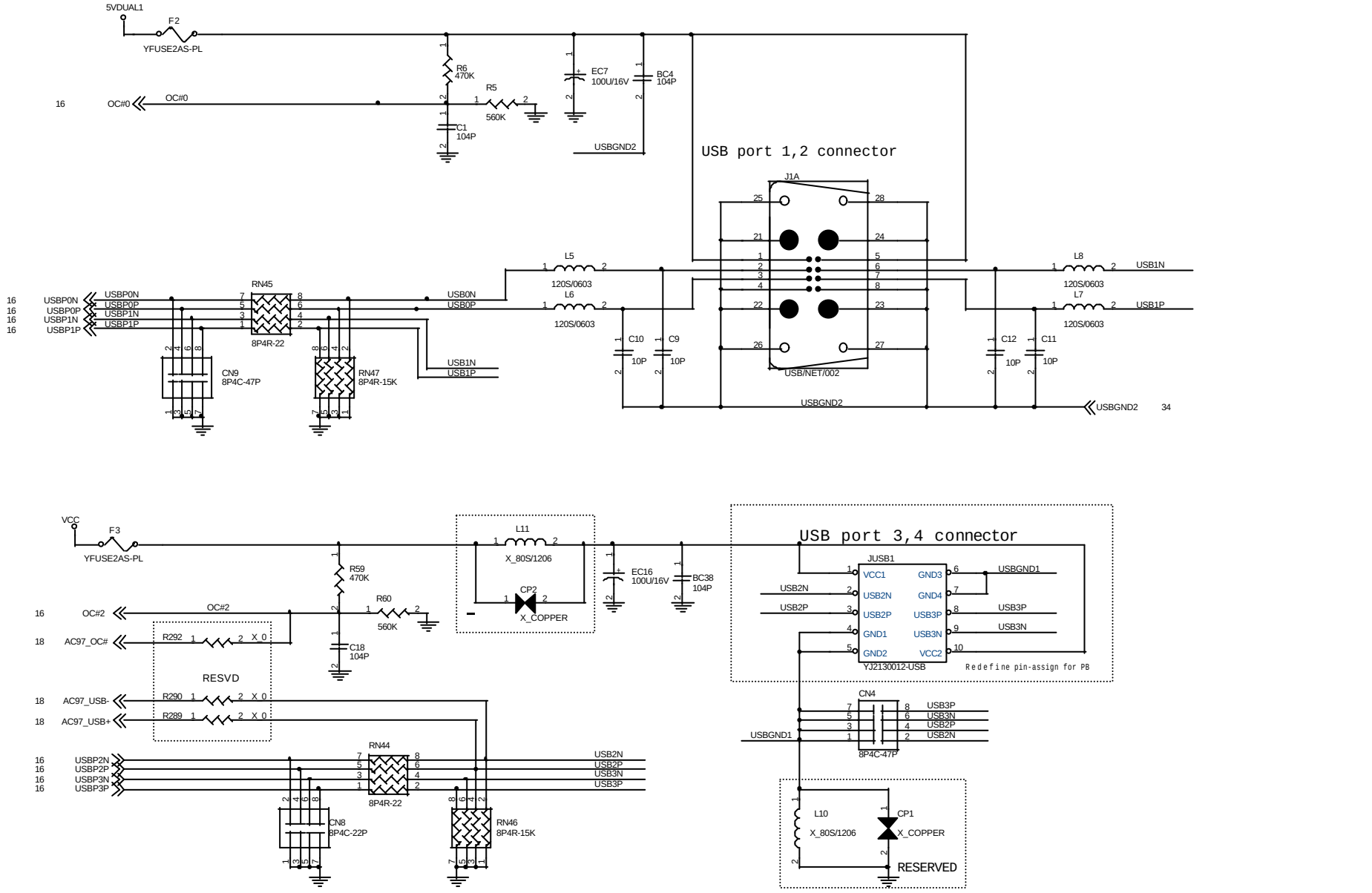

Micro-Star	Title: MS6315	Rev: 20A
Document Number: USB Connector		
Last Revision Date: Friday, September 22, 2000	Sheet 29 of 34	

VRM 8.4

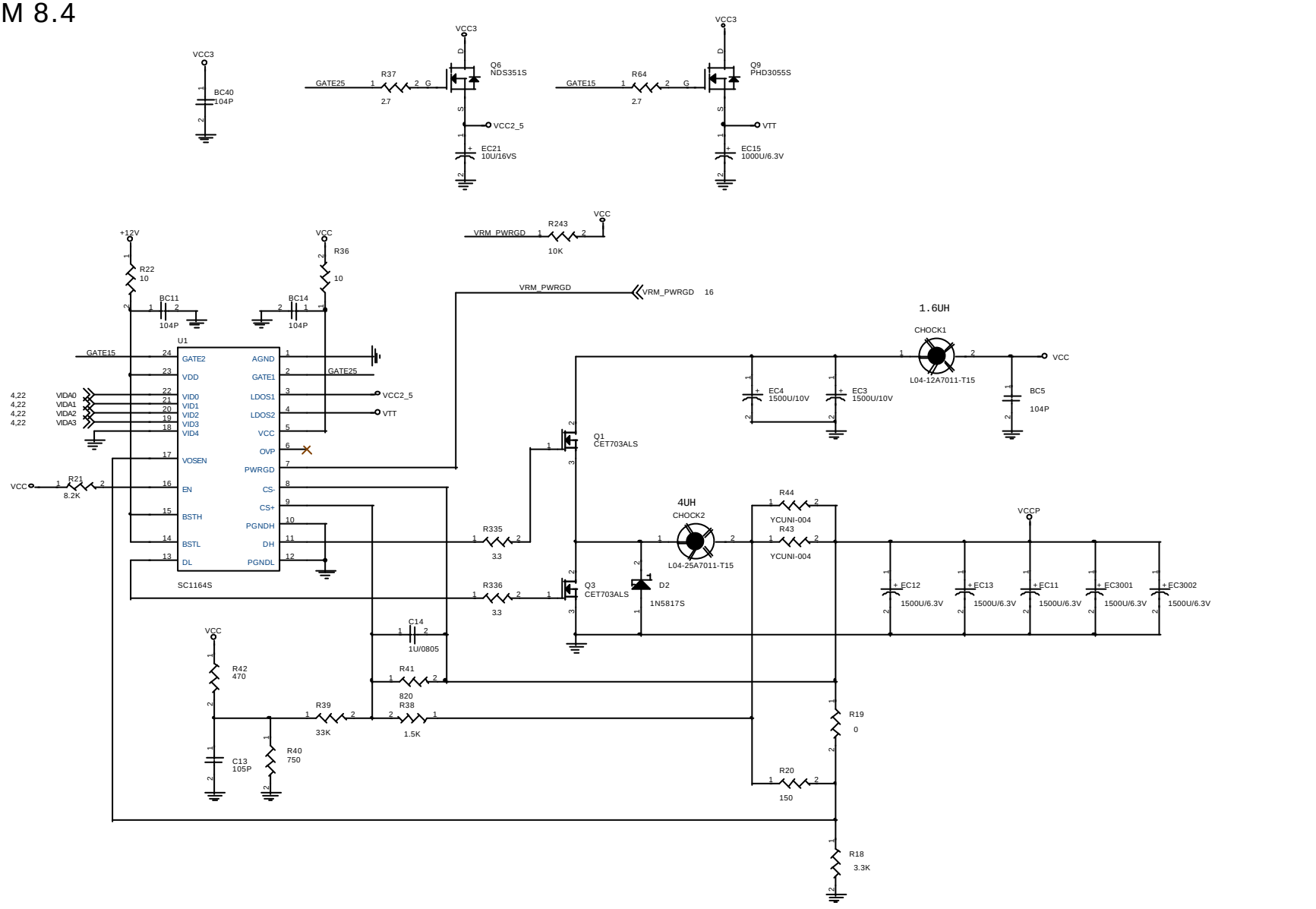

Micro-Star	Title: MS6315	Rev: 20A
Document Number: VRM 8.4 (SC1164) / VCCP , VCC2_5 , VTT		
Last Revision Date: Friday, September 22,2000	Sheet 30 of 34	

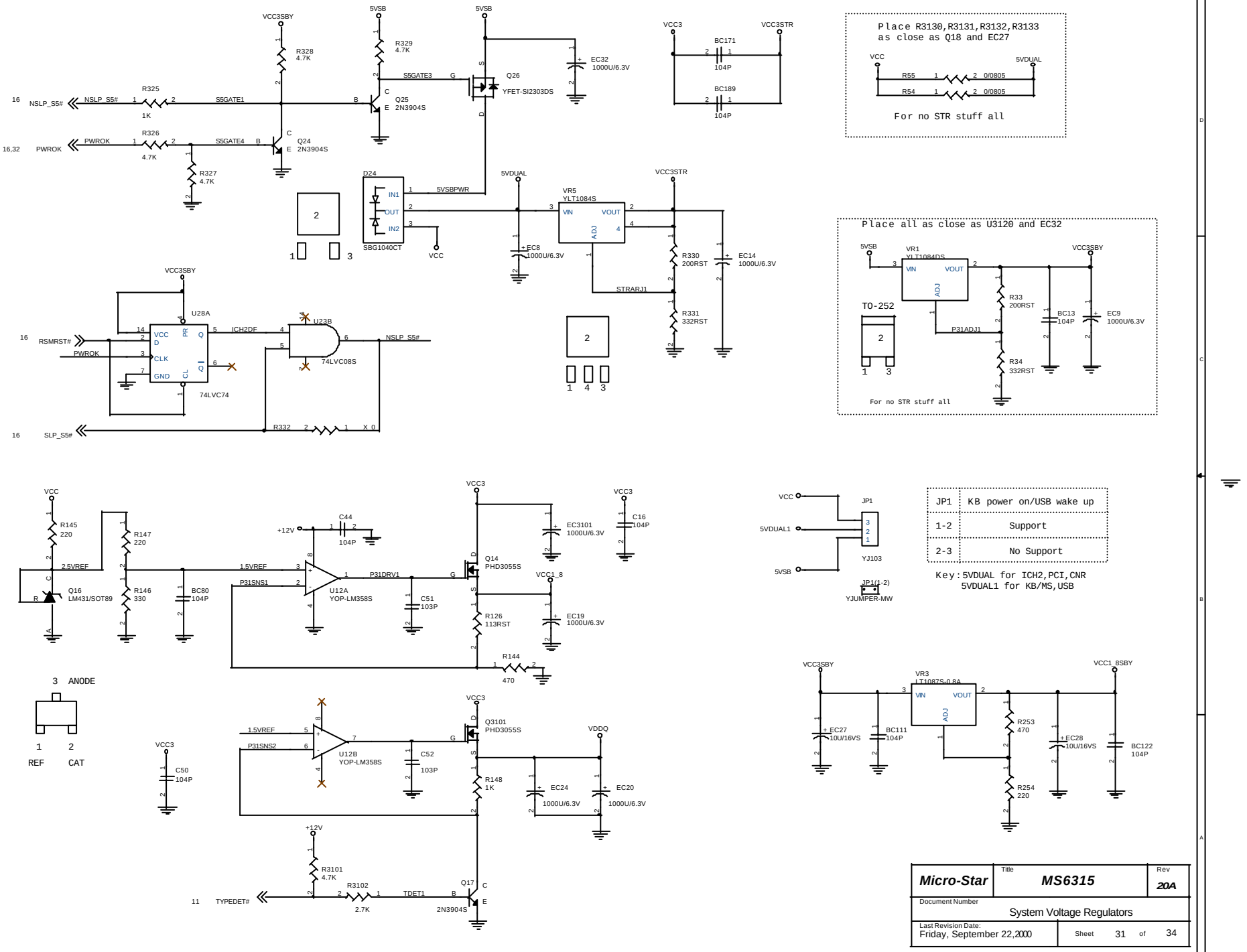
VCC3SBY
5VSB
5VSB
R328 4.7K
R329 4.7K
S5GATE3
Q26 YFET-SI2303DS
EC32 1000U/6.3V
VCC3
VCC3STR
BC171 104P
BC189 104P
16 NSLP_S5#
R325 1K
S5GATE1
Q25 E 2N3904S
16,32 PWROK
R326 4.7K
S5GATE4
Q24 E 2N3904S
R327 4.7K
D24 SBG1040CT
IN1
OUT
IN2
5VSBPWR
VCC
5VDUAL
VR5 YLT1084S
VIN
VOUT
ADJ
EC8 1000U/6.3V
VCC3STR
R330 200RST
EC14 1000U/6.3V
STRARJ1
R331 332RST
Place R3130,R3131,R3132,R3133 as close as Q18 and EC27
VCC
5VDUAL
R55 0/0805
R54 0/0805
For no STR stuff all
Place all as close as U3120 and EC32
5VSB
VR1 YLT1084DS
VCC3SBY
TO-252
P31ADJ1
R33 200RST
BC13 104P
EC9 1000U/6.3V
R34 332RST
For no STR stuff all
VCC3SBY
U28A
16 RSMRST#
PWROK
VCC
D
CLK
GND
PR
CL
Q
74LVC74
ICH2DF
U23B
74LVC08S
NSLP_S5#
16 SLP_S5#
R332
VCC
R145 220
R147 220
2.5VREF
Q16 LM431/SOT89
R146 330
BC80 104P
+12V
C44 104P
1.5VREF
P31SNS1
U12A YOP-LM358S
P31DRV1
C51 103P
VCC3
Q14 PHD3055S
EC3101 1000U/6.3V
C16 104P
VCC1_8
R126 113RST
EC19 1000U/6.3V
R144 470
3 ANODE
1 REF
2 CAT
VCC3
C50 104P
1.5VREF
P31SNS2
U12B YOP-LM358S
C52 103P
Q3101 PHD3055S
VDDQ
R148 1K
EC24 1000U/6.3V
EC20 1000U/6.3V
+12V
R3101 4.7K
R3102 2.7K
TDET1
11 TYPEDET#
Q17 2N3904S
VCC
5VDUAL1
5VSB
JP1
YJ103
JP1(1-2)
YJUMPER-MW
JP1 | KB power on/USB wake up
1-2 | Support
2-3 | No Support
Key:5VDUAL for ICH2,PCI,CNR
5VDUAL1 for KB/MS,USB
VCC3SBY
VR3 LT1087S-0.8A
VCC1_8SBY
EC27 10U/16VS
BC111 104P
R253 470
EC28 10U/16VS
BC122 104P
R254 220
Micro-Star
Title
MS6315
Rev
20A
Document Number
System Voltage Regulators
Last Revision Date:
Friday, September 22,2000
Sheet 31 of 34

Front Panel & Power Connector

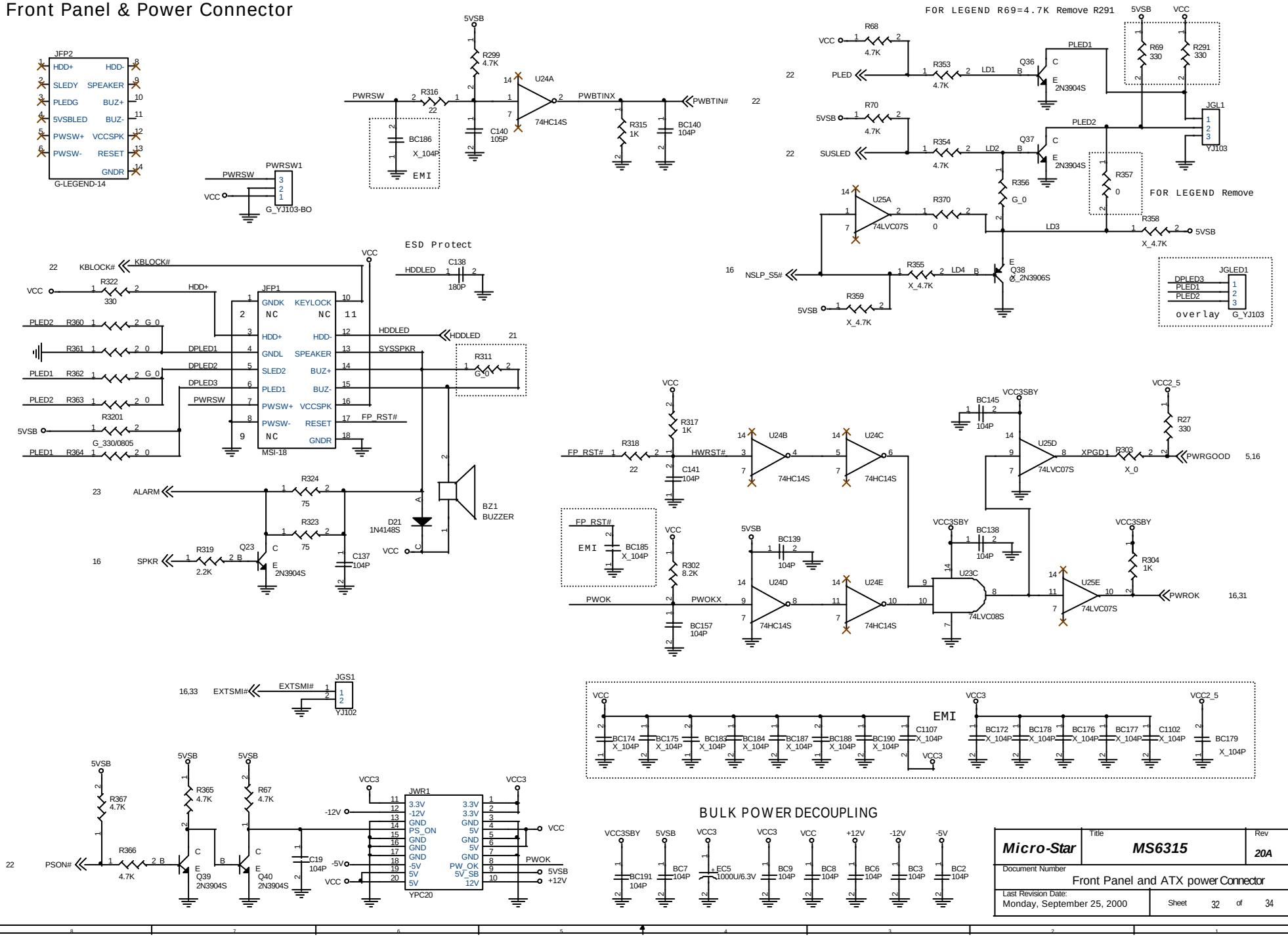

Micro-Star	Title: MS6315		Rev: 20A
Document Number: Front Panel and ATX power Connector			
Last Revision Date: Monday, September 25, 2000		Sheet 32 of 34	

PULL-UP RESISTORS

PCI BUS

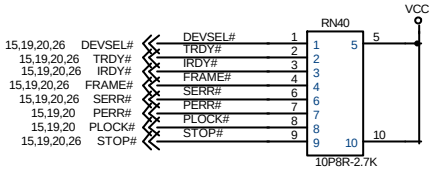

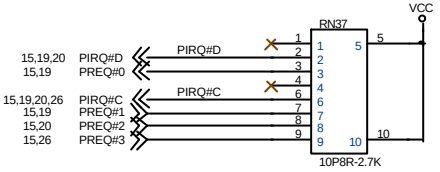

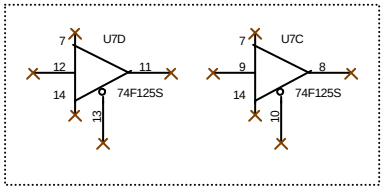

ICH

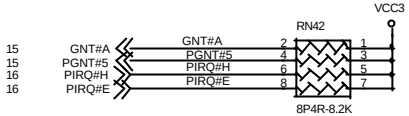

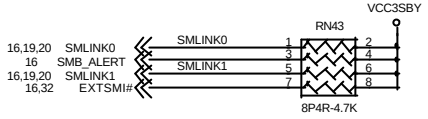

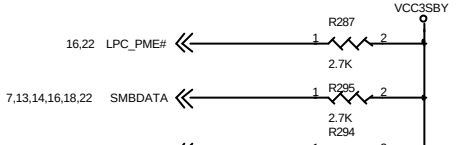

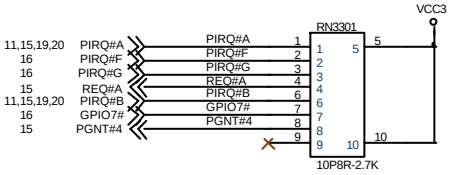

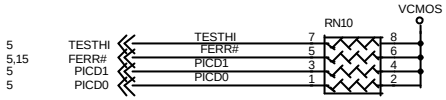

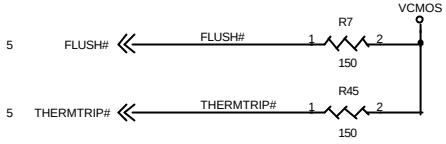

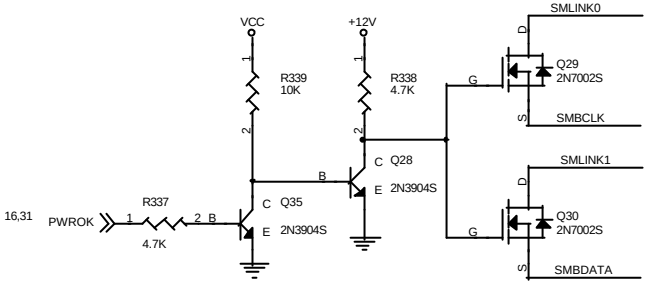

Micro-Star	Title: MS6315	Rev: 20A
Document Number: Pull-Up Resistors		
Last Revision Date: Friday, September 22, 2000	Sheet 33 of 34	

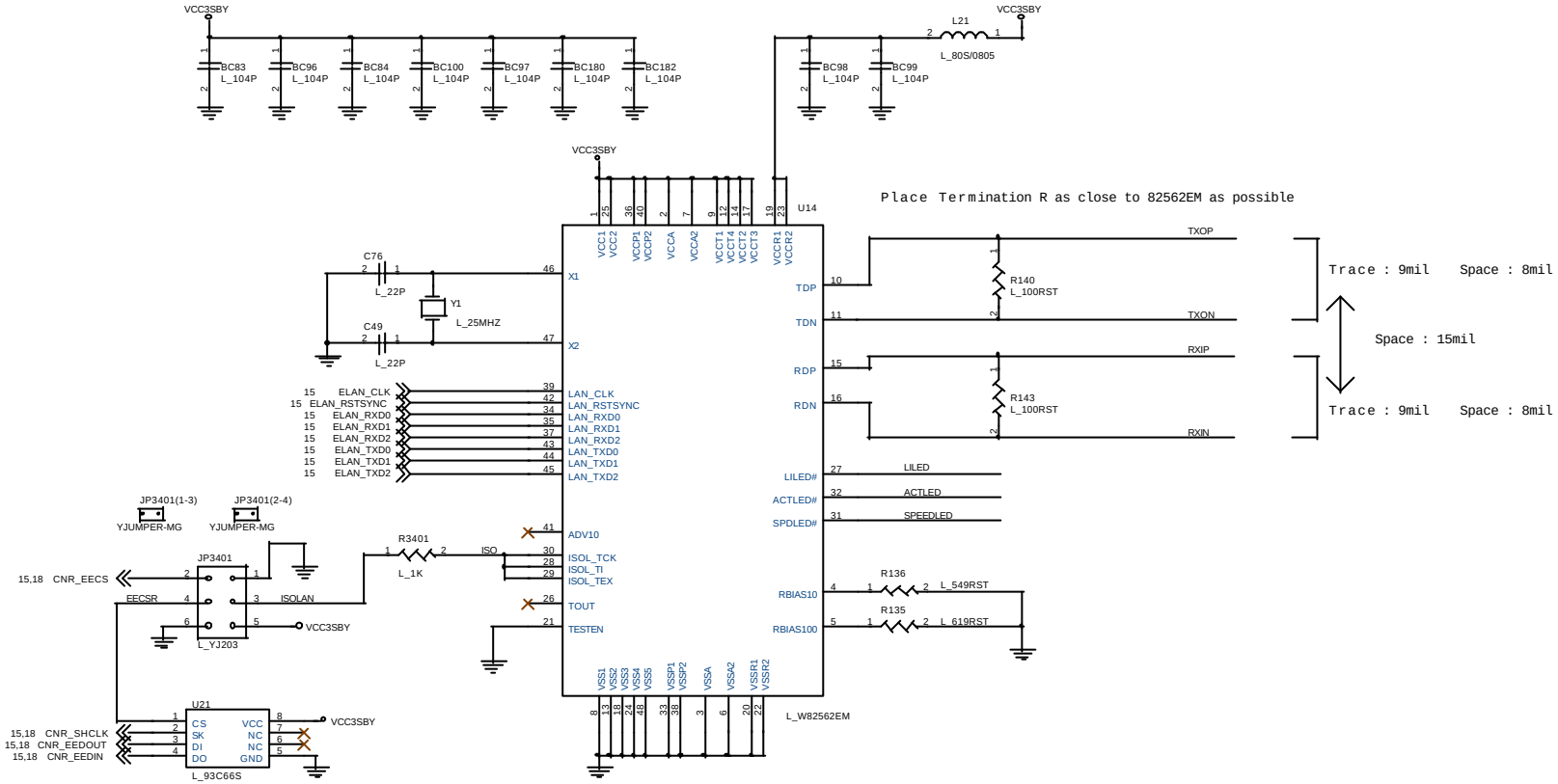

JP3401	On board LAN
1-3,2-4	Enable
3-5,4-6	Disable

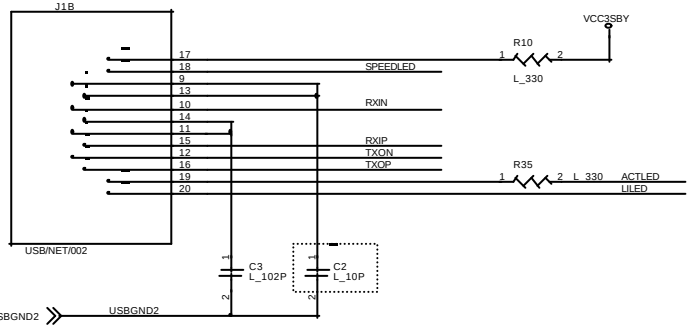

Micro-Star	Title: MS6315		Rev: 20A
Document Number: LAN Connector & I562EM (Kinnereth+)			
Last Revision Date: Friday, September 22,2000	Sheet 34 of 34		

MS-6315 Micro-ATX

Intel PPGA 370 Processor

Intel Solano2 Chipset

Winbond 83627HF-AW LPC I/O

Creative CT5880 Controller 4-Speaker

ICH2 LAN Controller + Kinnereth Plus

Model option table

Model type	Function	Part Mark
MS6315	Stantard will be del	X_????
Option A	With/ CT5880	A_????
Option L	With/ LAN on board	L_????
Option H	With/ Hardware monitor	H_????
Option S	With/ STR	S_????
Option G	For Legend only	G_????

Stantard+W/LAN ,W/ HW Monitor , W/STR

Title	Page
Cover Sheet	1
Block Diagram	2
GPIO SPEC	3
370PGA Socket	4,5
GTL Termination	6
Clock Synthesizer	7
GMCH	8,9,10
AGP / AIMM Display Cache	11
Graphics Connectors	12
System Memory	13,14
ICH	15,16
FWH	17
CNR Riser	18
PCI Connectors	19,20
ATA66 Connectors	21
LPC I/O	22
Hardware monitor	23
Parallel / Serial Port	24
Keyboard/Mouse Connectors	25
PCI Audio Controllor	26
AC'97 Codec	27
Audio/Game Port	28
USB HUB & USB Connectors	29
VRM 8.4	30
Voltage Regulators	31
Front Panel	32
Pull-up Resistors	33
LAN	34
History	

Block Diagram

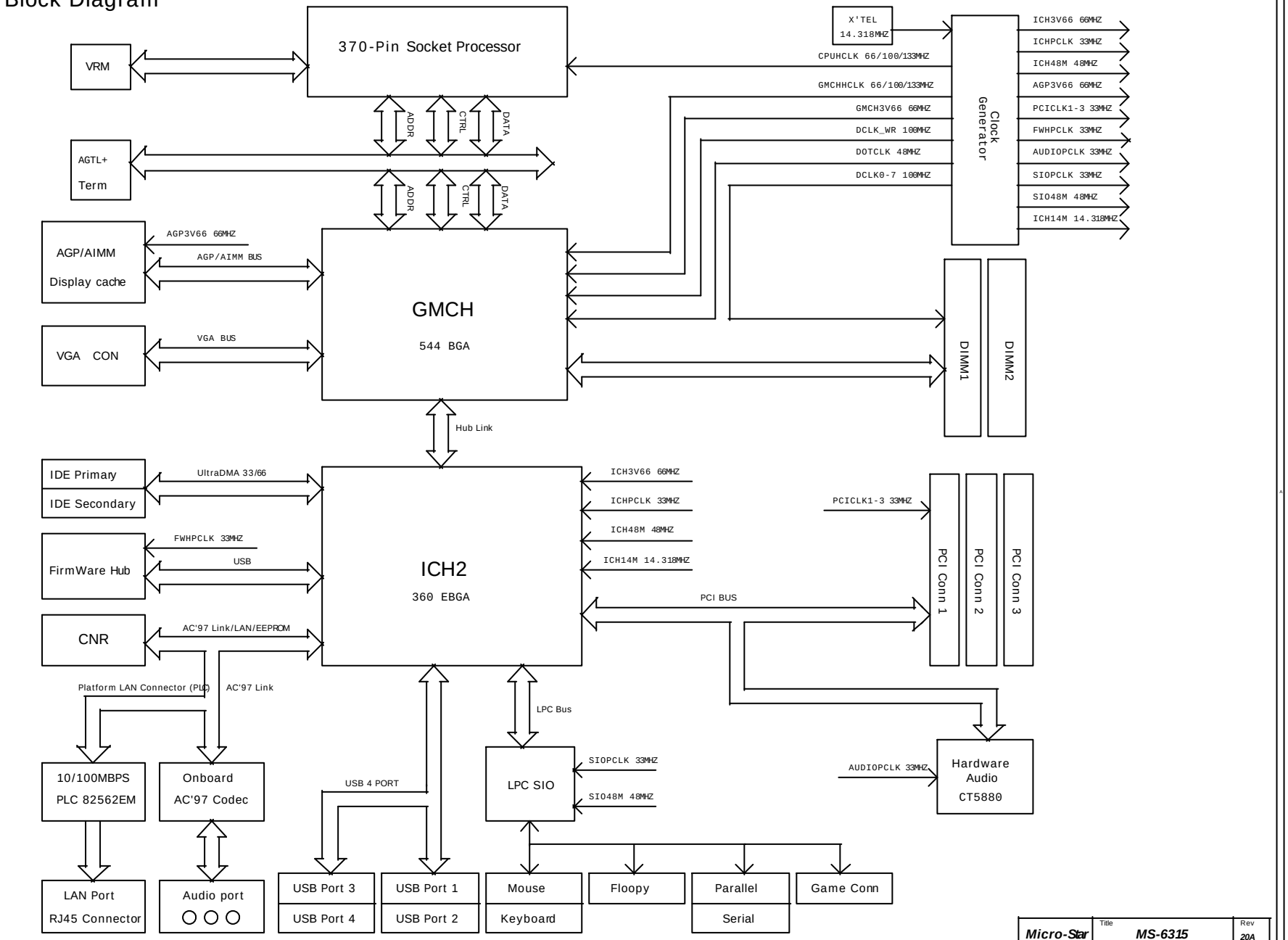

Micro-Star	Title: MS-6315	Rev: 20A
Document Number: Block Diagram		
Last Revision Date: Friday, September 22, 2000	Sheet 2 of 34	

General Purpose I/O Spec.

ICH

GPIO Pin	Type	Function
GPIO 0	I	Pull up (REQ#A)
GPIO 1	I	PREQ#5
GPIO 2~4	I	NC
GPIO 5	I	NC
GPIO 6	I	NC
GPIO 7	I	NC
GPIO 8	I	LAN Wake Up
GPIO 9	I	Not Implemented
GPIO 10	I	Not Implemented
GPIO 11	I	SMB_ALERT
GPIO 12	I	External SMI
GPIO 13	I	LPC PME
GPIO 14~15	I	Not Implemented
GPIO 16	O	Pull up(GNT#A)
GPIO 17	O	PGNT#5
GPIO 18~20	O	NC
GPIO 21	O	FAN Ctrl
GPIO 22	O	Pullup
GPIO 23	OD	BIOS update lock(H)/unlock(L)
GPIO 24	O	NC
GPIO 25	O	NC
GPIO 26	O	Not Implemented
GPIO 27	I/O	NC
GPIO 28	I/O	NC
GPIO 29~31	I/O	Not Implemented

FWH

GPIO Pin	Type	Function
GPI 0	I	ATA IDE 1 Detect
GPI 1	I	ATA IDE 2 Detect
GPI 2	I	GPI2=L GPI3=H Flash from FDD
GPI 3	I	GPI2=H GPI3=L Boot Auto clear CMOS

ICH2 SMLINK0,1 Connect to PCI2 for PCI card AOL

PCI Config.

DEVICE	ICH INT Pin	IDSEL
PCI Slot 1	INTA# INTB# INTC# INTD#	AD16
PCI Slot 2	INTB# INTC# INTD# INTA#	AD17
PCI Slot 3	INTC# INTD# INTA# INTB#	AD18
CT5880	INTC#	AD26

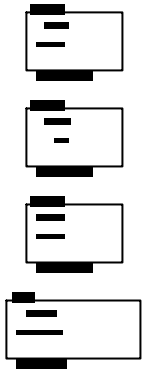

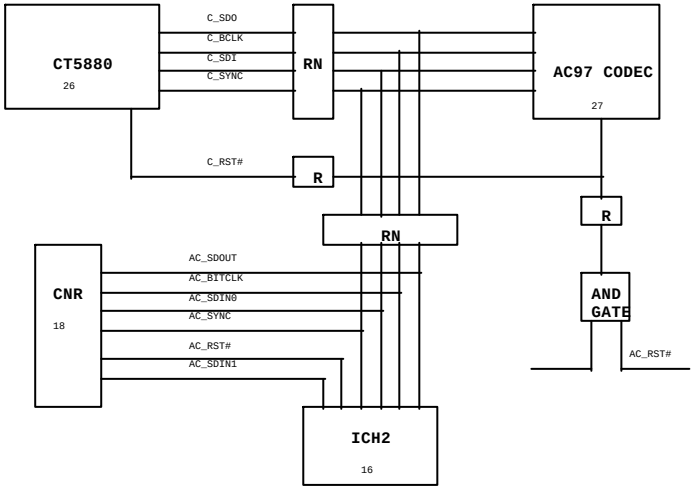

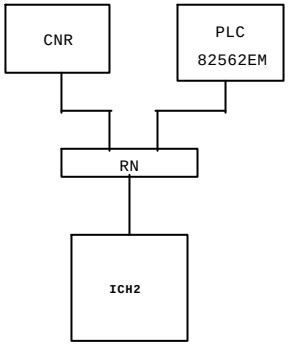

Micro-Star	MS-6315	20A
BIOS GPIO SPEC.		
Friday, September 22, 2000	3	34

370PGA Socket Part 1

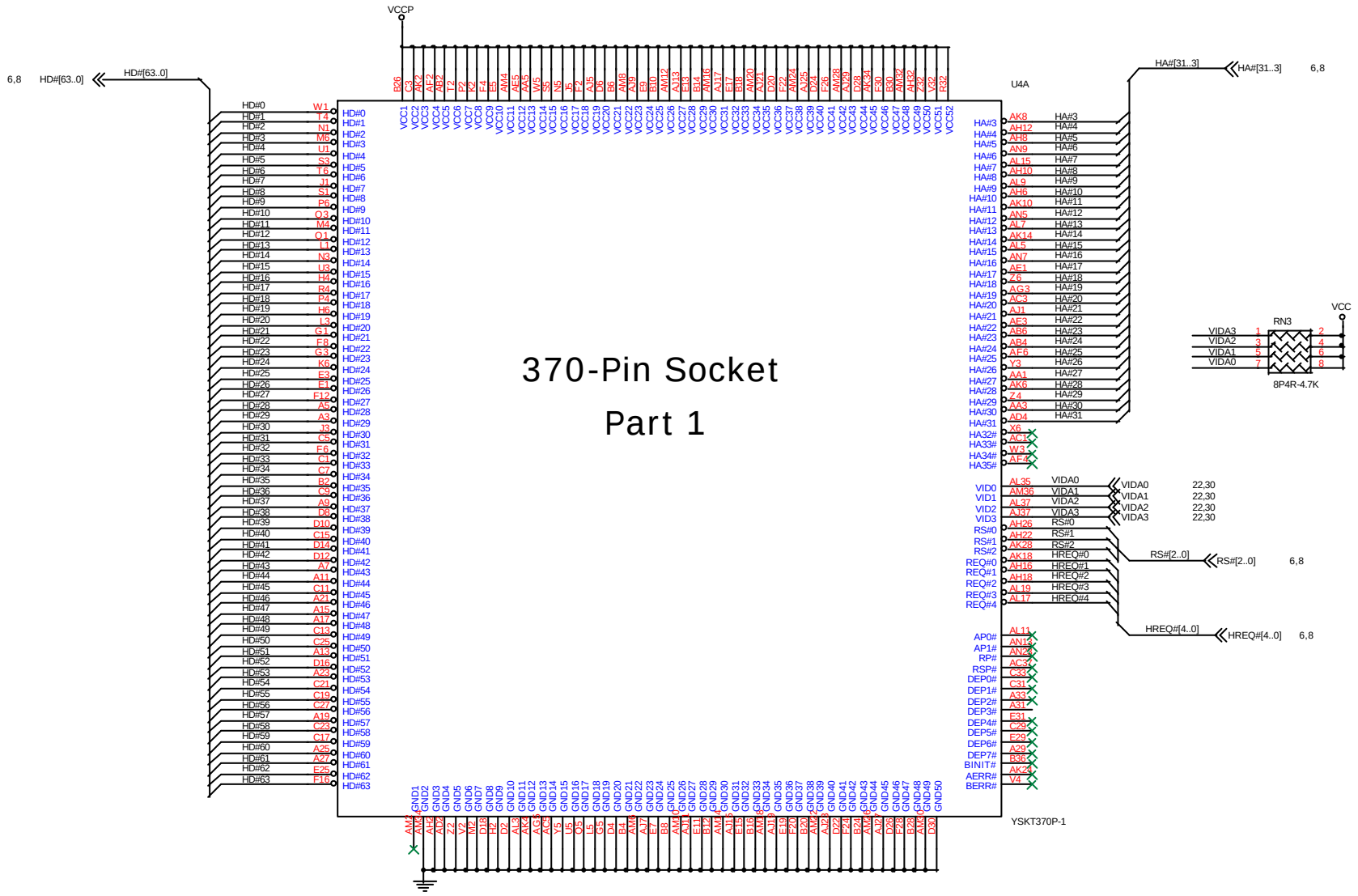

Micro-Star	Title: MS-6315		Rev: 20A
Document Number: SOCKET 370 PGA-1			
Last Revision Date: Friday, September 22, 2000		Sheet 4 of 34	

370PGA Socket Part 2

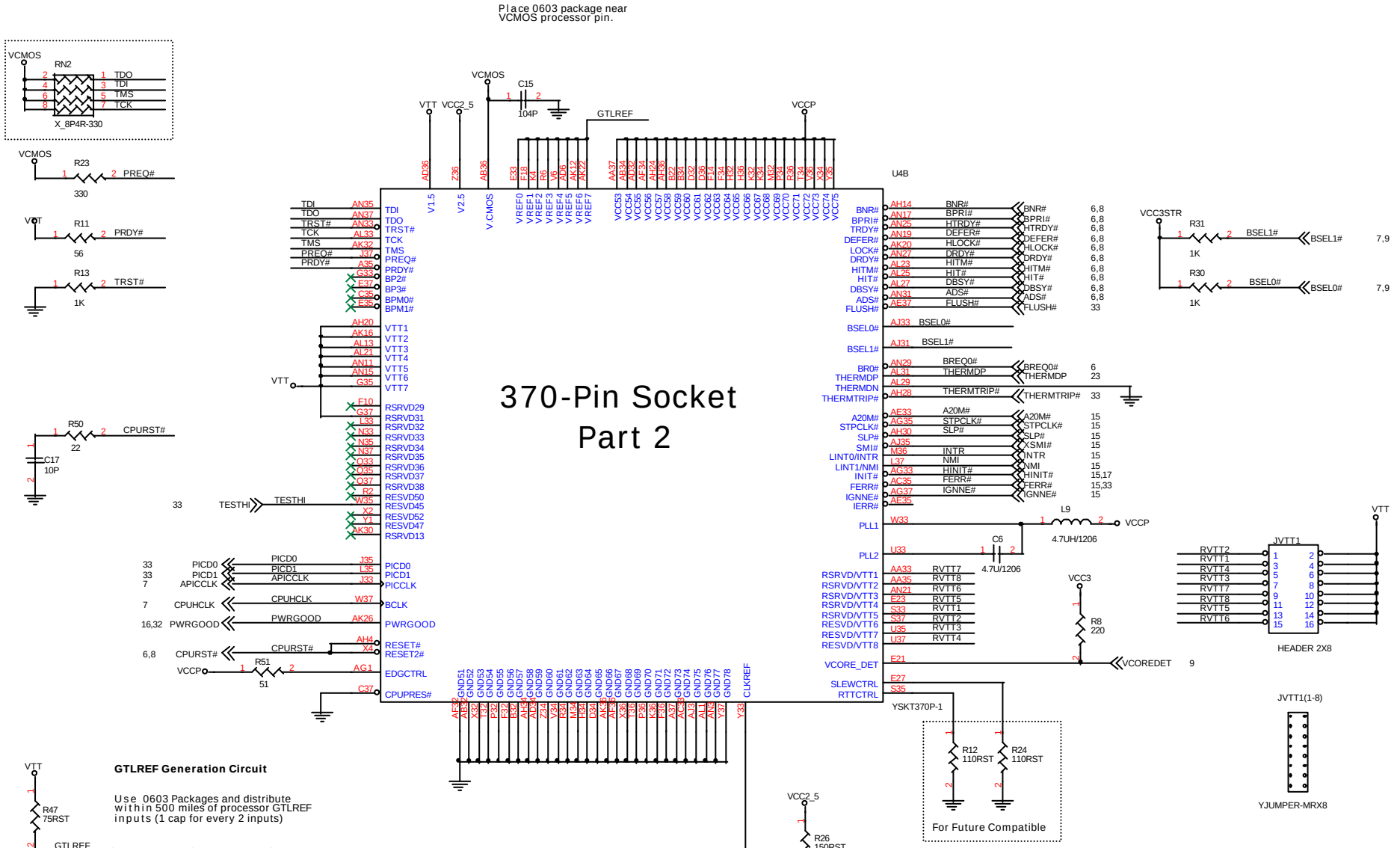

GTL Termination

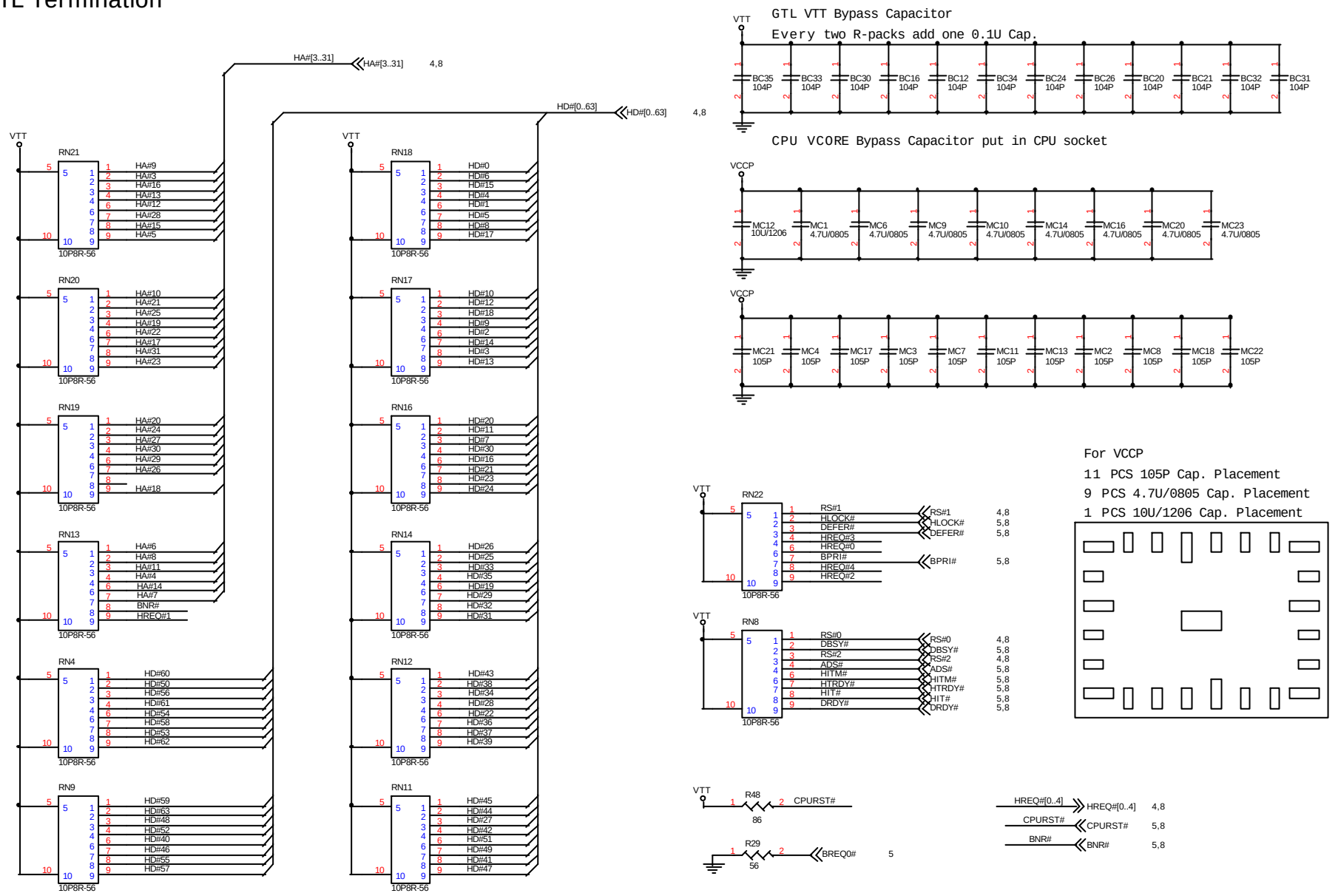

CPU VCORE Bypass Capacitor put in CPU socket

For VCCP
11 PCS 105P Cap. Placement
9 PCS 4.7U/0805 Cap. Placement
1 PCS 10U/1206 Cap. Placement

Micro-Star	Title: MS-6315	Rev: 20A
Document Number: GTL Termination		
Last Revision Date: Friday, September 22, 2000	Sheet 6 of 34	

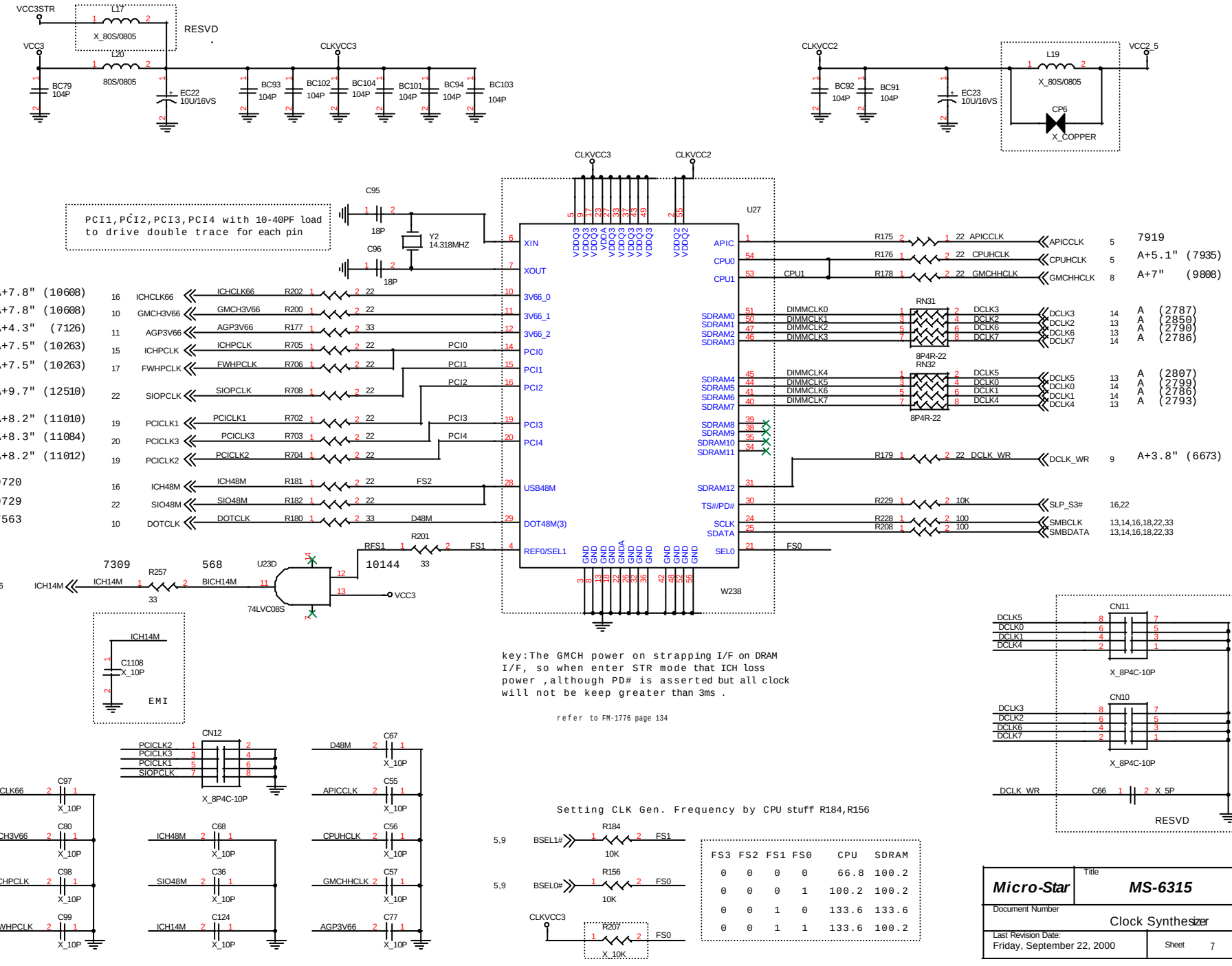
VCC3STR
L17
X_80S/0805
RESVD
VCC3
L20
80S/0805
BC79 104P
EC22 10U/16VS
CLKVCC3
BC93 104P
BC102 104P
BC104 104P
BC101 104P
BC94 104P
BC103 104P
CLKVCC2
BC92 104P
BC91 104P
EC23 10U/16VS
L19
X_80S/0805
VCC2_5
CP6
X_COPPER
PCI1,PCI2,PCI3,PCI4 with 10-40PF load to drive double trace for each pin
C95
18P
Y2 14.318MHZ
C96
18P
U27
XIN
XOUT
3V66_0
3V66_1
3V66_2
PCI0
PCI1
PCI2
PCI3
PCI4
USB48M
DOT48M(3)
REF0/SEL1
APIC
CPU0
CPU1
SDRAM0
SDRAM1
SDRAM2
SDRAM3
SDRAM4
SDRAM5
SDRAM6
SDRAM7
SDRAM8
SDRAM9
SDRAM10
SDRAM11
SDRAM12
TS#/PD#
SCLK
SDATA
SEL0
W238
A+7.8" (10608)
A+7.8" (10608)
A+4.3" (7126)
A+7.5" (10263)
A+7.5" (10263)
A+9.7" (12510)
A+8.2" (11010)
A+8.3" (11084)
A+8.2" (11012)
9720
9729
7563
ICHCLK66
GMCH3V66
AGP3V66
ICHPCLK
FWHPCLK
SIOPCLK
PCICLK1
PCICLK3
PCICLK2
ICH48M
SIO48M
DOTCLK
R202 22
R200 22
R177 33
R705 22
R706 22
R708 22
R702 22
R703 22
R704 22
R181 22
R182 22
R180 33
FS2
D48M
FS1
R201 33
RFS1
10144
7309
568
U23D
74LVC08S
R257 33
ICH14M
BICH14M
VCC3
R175 22 APICCLK
R176 22 CPUHCLK
R178 22 GMCHHCLK
RN31
8P4R-22
RN32
8P4R-22
DIMMCLK0
DIMMCLK1
DIMMCLK2
DIMMCLK3
DIMMCLK4
DIMMCLK5
DIMMCLK6
DIMMCLK7
DCLK3
DCLK2
DCLK6
DCLK7
DCLK5
DCLK0
DCLK1
DCLK4
R179 22 DCLK_WR
R229 10K
R228 100
R208 100
SLP_S3#
SMBCLK
SMBDATA
7919
A+5.1" (7935)
A+7" (9808)
A (2787)
A (2850)
A (2790)
A (2786)
A (2807)
A (2799)
A (2786)
A (2793)
A+3.8" (6673)
16,22
13,14,16,18,22,33
13,14,16,18,22,33
key:The GMCH power on strapping I/F on DRAM I/F, so when enter STR mode that ICH loss power ,although PD# is asserted but all clock will not be keep greater than 3ms .
refer to FM-1776 page 134
ICH14M
C1108 X_10P
EMI
CN12
X_8P4C-10P
CN11
X_8P4C-10P
CN10
X_8P4C-10P
C97 X_10P
C80 X_10P
C98 X_10P
C99 X_10P
C68 X_10P
C36 X_10P
C124 X_10P
C67 X_10P
C55 X_10P
C56 X_10P
C57 X_10P
C77 X_10P
C66 X_5P
RESVD
Setting CLK Gen. Frequency by CPU stuff R184,R156
BSEL1#
BSEL0#
R184 10K
R156 10K
R207 X_10K
FS3 FS2 FS1 FS0 CPU SDRAM
0 0 0 0 66.8 100.2
0 0 0 1 100.2 100.2
0 0 1 0 133.6 133.6
0 0 1 1 133.6 100.2
Micro-Star
Title
MS-6315
Rev
20A
Document Number
Clock Synthesizer
Last Revision Date:
Friday, September 22, 2000
Sheet 7 of 34

82815, PART 1 : HOST INTERFACE

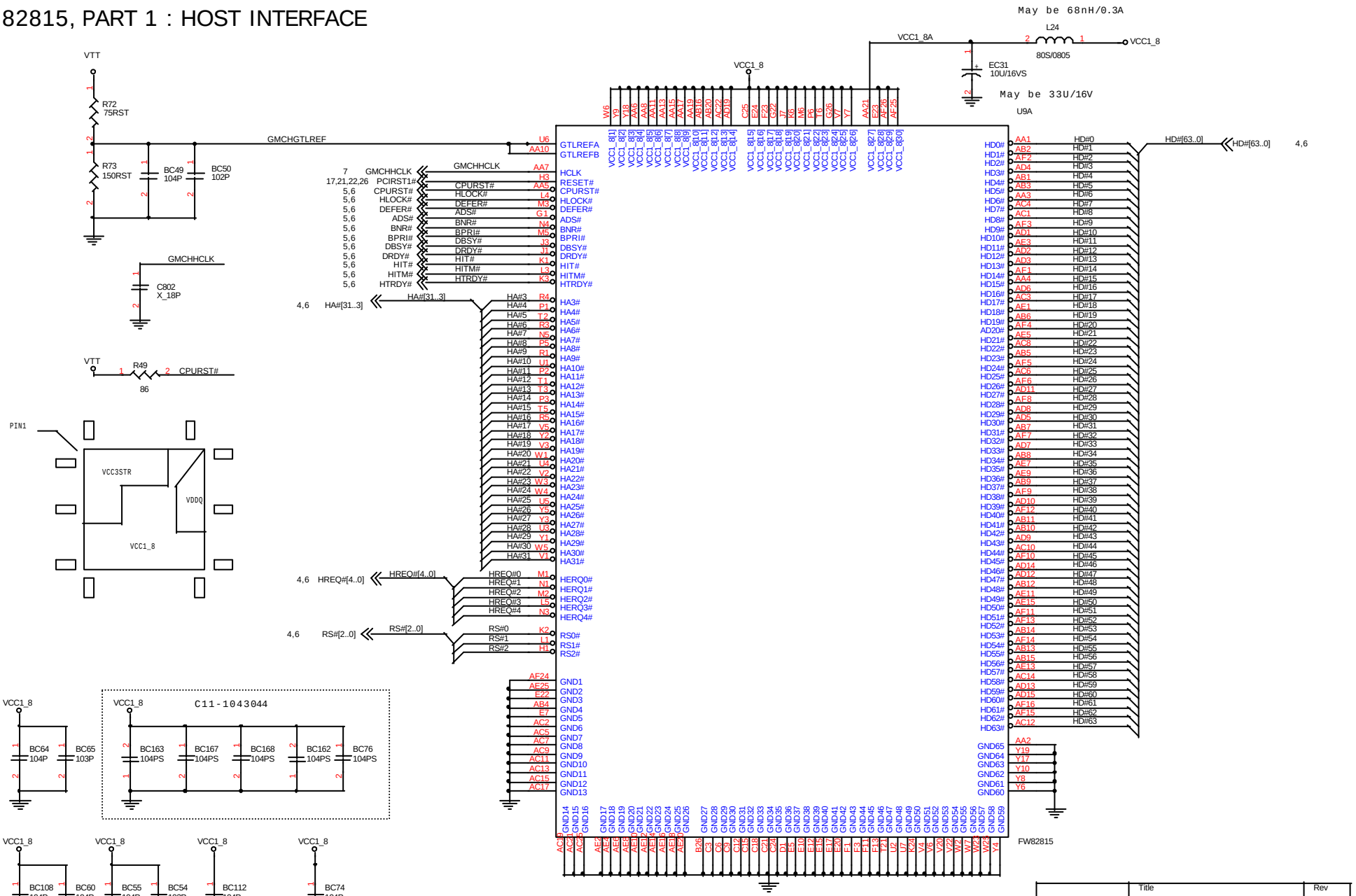

Micro-Star	Title: MS-6315		Rev: 20A
Document Number: GMCH Part1 Host Interface			
Last Revision Date: Friday, September 22, 2000		Sheet 8 of 34	

GMCH, PART 2 : SYSTEM MEMORY

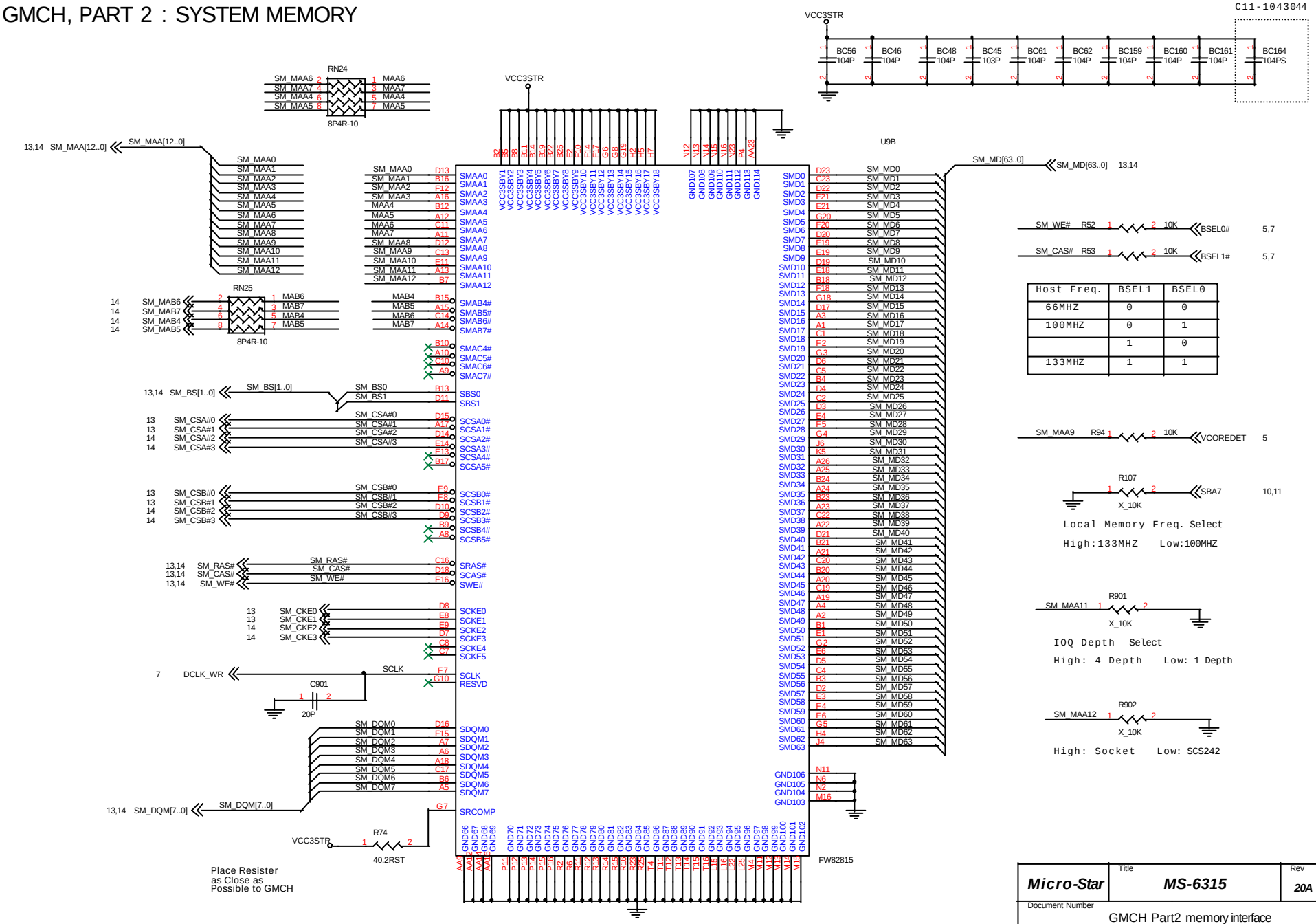

GMCH PART 3 : AGP & VIDEO Interface & HUB link

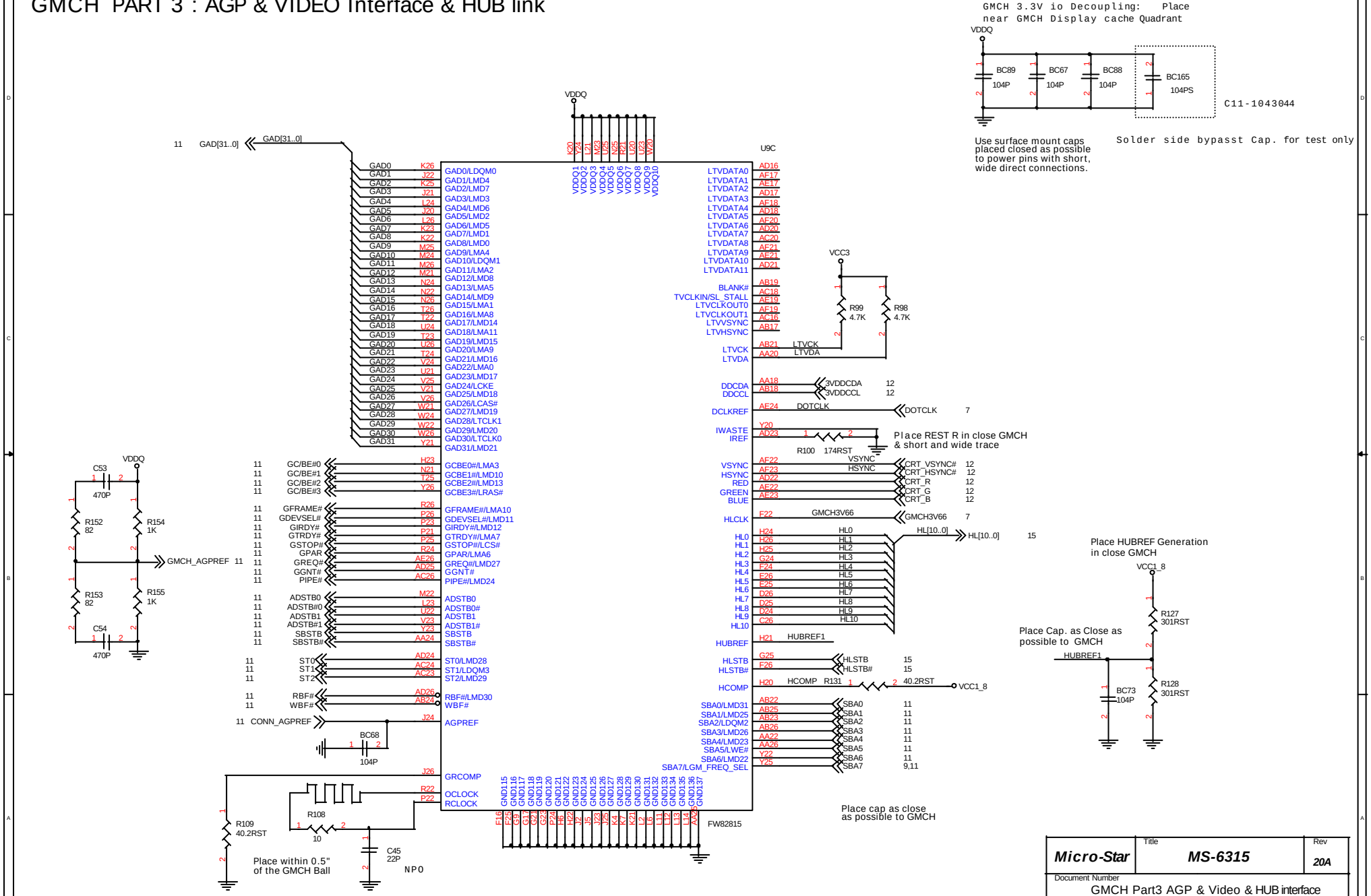

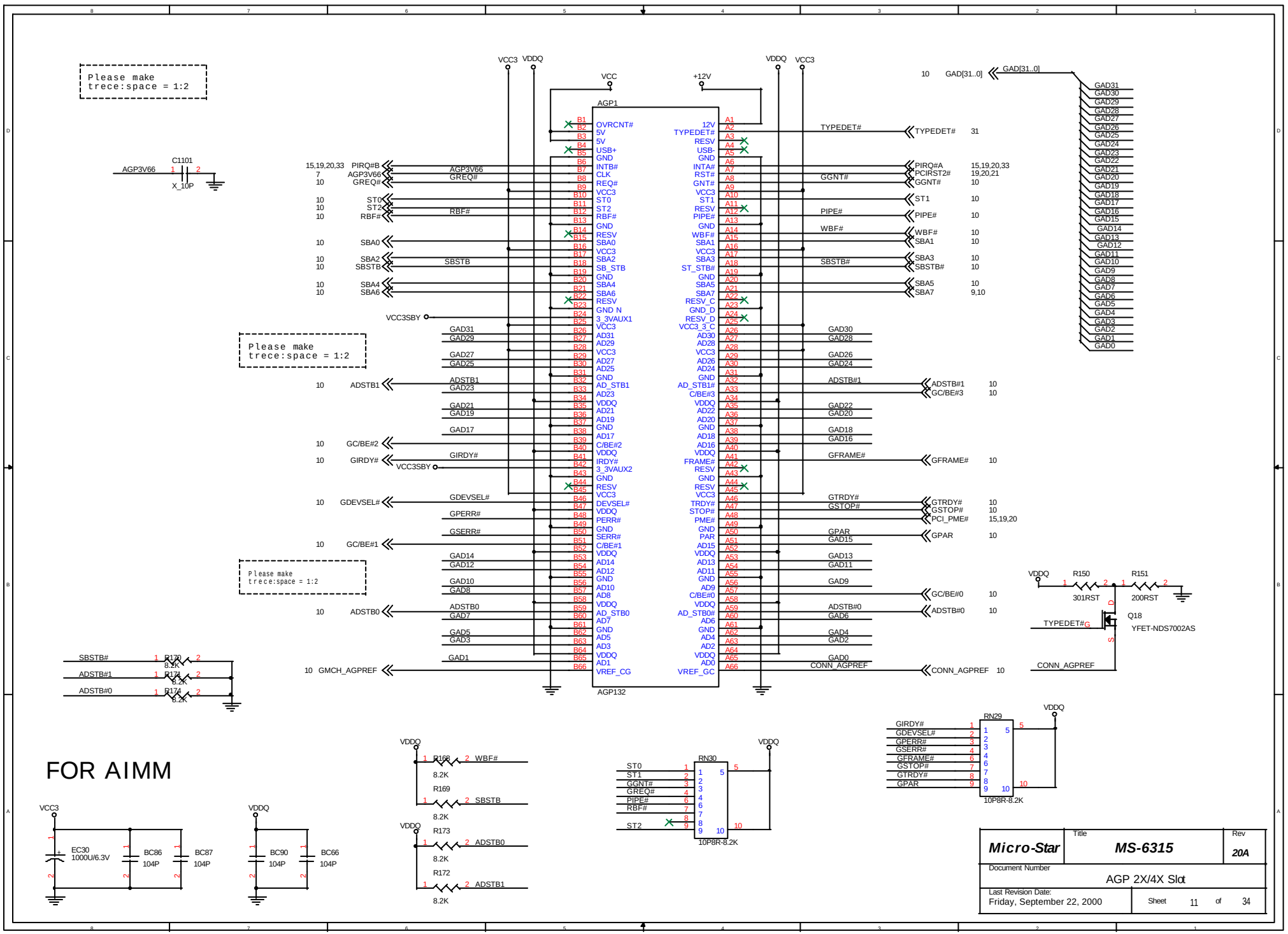
Please make trece:space = 1:2
Please make trece:space = 1:2
Please make trece:space = 1:2
AGP1
AGP132
VCC3
VDDQ
VCC
+12V
C1101
X_10P
AGP3V66
PIRQ#B
GREQ#
ST0
ST2
RBF#
SBA0
SBA2
SBSTB
SBA4
SBA6
VCC3SBY
GAD31
GAD29
GAD27
GAD25
ADSTB1
GAD23
GAD21
GAD19
GAD17
GC/BE#2
GIRDY#
GDEVSEL#
GPERR#
GSERR#
GC/BE#1
GAD14
GAD12
GAD10
GAD8
ADSTB0
GAD7
GAD5
GAD3
GAD1
GMCH_AGPREF
OVRCNT#
USB+
INTB#
CLK
REQ#
ST0
ST2
RBF#
RESV
SBA0
SBA2
SB_STB
SBA4
SBA6
GND N
3_3VAUX1
AD31
AD29
AD27
AD25
AD_STB1
AD23
AD21
AD19
AD17
C/BE#2
IRDY#
3_3VAUX2
DEVSEL#
PERR#
SERR#
C/BE#1
AD14
AD12
AD10
AD8
AD_STB0
AD7
AD5
AD3
AD1
VREF_CG
12V
TYPEDET#
RESV
USB-
INTA#
RST#
GNT#
VCC3
ST1
RESV
PIPE#
GND
WBF#
SBA1
VCC3
SBA3
ST_STB#
GND
SBA5
SBA7
RESV_C
GND_D
RESV_D
VCC3_3_C
AD30
AD28
VCC3
AD26
AD24
GND
AD_STB1#
C/BE#3
VDDQ
AD22
AD20
GND
AD18
AD16
VDDQ
FRAME#
RESV
GND
RESV
VCC3
TRDY#
STOP#
PME#
GND
PAR
AD15
VDDQ
AD13
AD11
GND
AD9
C/BE#0
VDDQ
AD_STB0#
AD6
GND
AD4
AD2
VDDQ
AD0
VREF_GC
GAD[31..0]
GAD31
GAD30
GAD29
GAD28
GAD27
GAD26
GAD25
GAD24
GAD23
GAD22
GAD21
GAD20
GAD19
GAD18
GAD17
GAD16
GAD15
GAD14
GAD13
GAD12
GAD11
GAD10
GAD9
GAD8
GAD7
GAD6
GAD5
GAD4
GAD3
GAD2
GAD1
GAD0
TYPEDET#
PIRQ#A
PCIRST2#
GGNT#
ST1
PIPE#
WBF#
SBA1
SBA3
SBSTB#
SBA5
SBA7
ADSTB#1
GC/BE#3
GFRAME#
GTRDY#
GSTOP#
PCI_PME#
GPAR
GC/BE#0
ADSTB#0
CONN_AGPREF
R150
301RST
R151
200RST
Q18
YFET-NDS7002AS
SBSTB#
ADSTB#1
ADSTB#0
R170
R171
R174
8.2K
R168
R169
R173
R172
WBF#
SBSTB
ADSTB0
ADSTB1
RN30
10P8R-8.2K
RN29
GIRDY#
GDEVSEL#
GPERR#
GSERR#
GFRAME#
GSTOP#
GTRDY#
GPAR
FOR AIMM
EC30
1000U/6.3V
BC86
104P
BC87
104P
BC90
104P
BC66
104P
Micro-Star
Title
MS-6315
Rev
20A
Document Number
AGP 2X/4X Slot
Last Revision Date:
Friday, September 22, 2000
Sheet 11 of 34

Video Connector

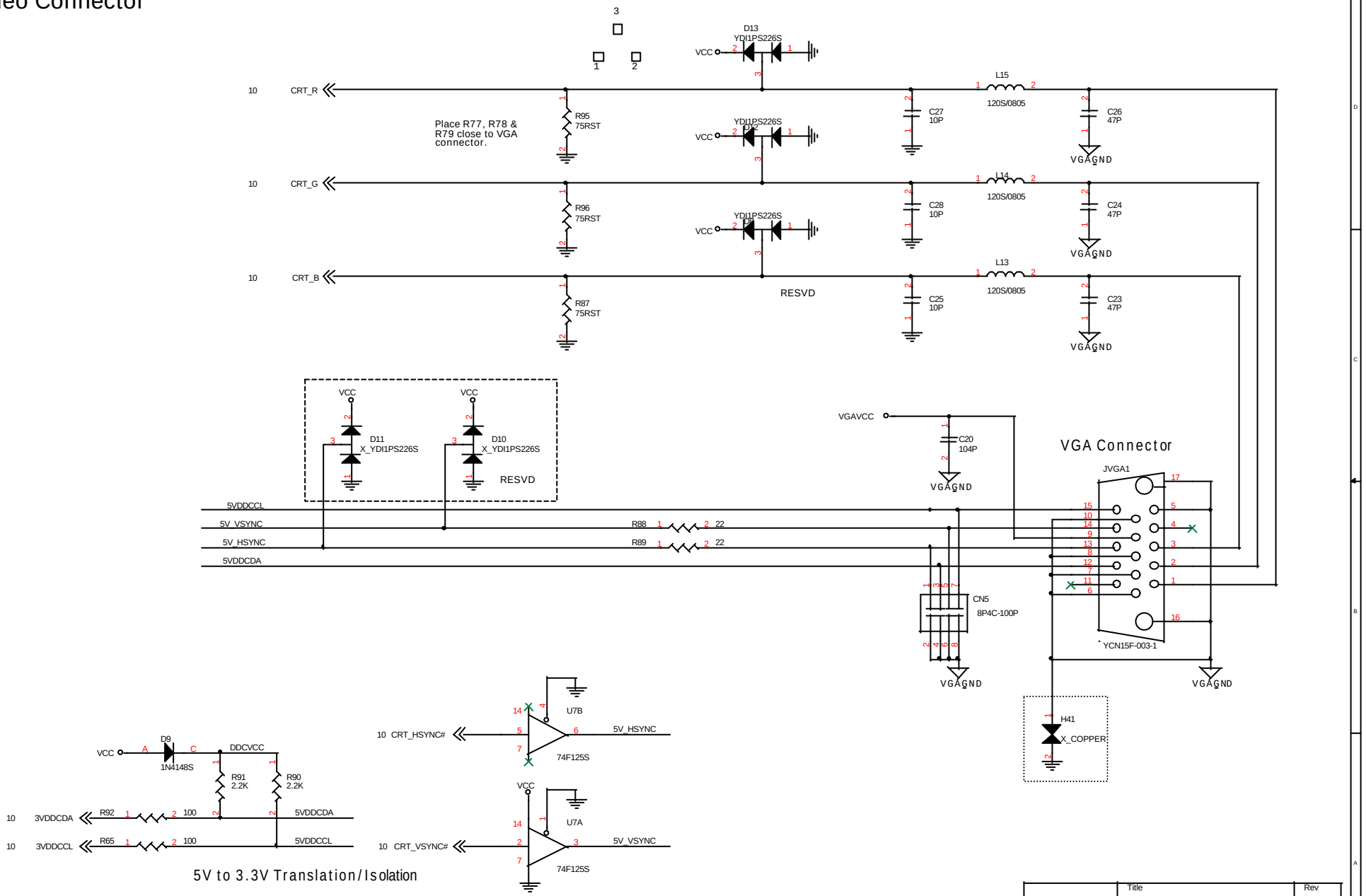

5V to 3.3V Translation/Isolation

Micro-Star	Title: MS-6315		Rev: 20A
Document Number: Video Connector			
Last Revision Date: Friday, September 22, 2000		Sheet 12 of 34	

DIMM1

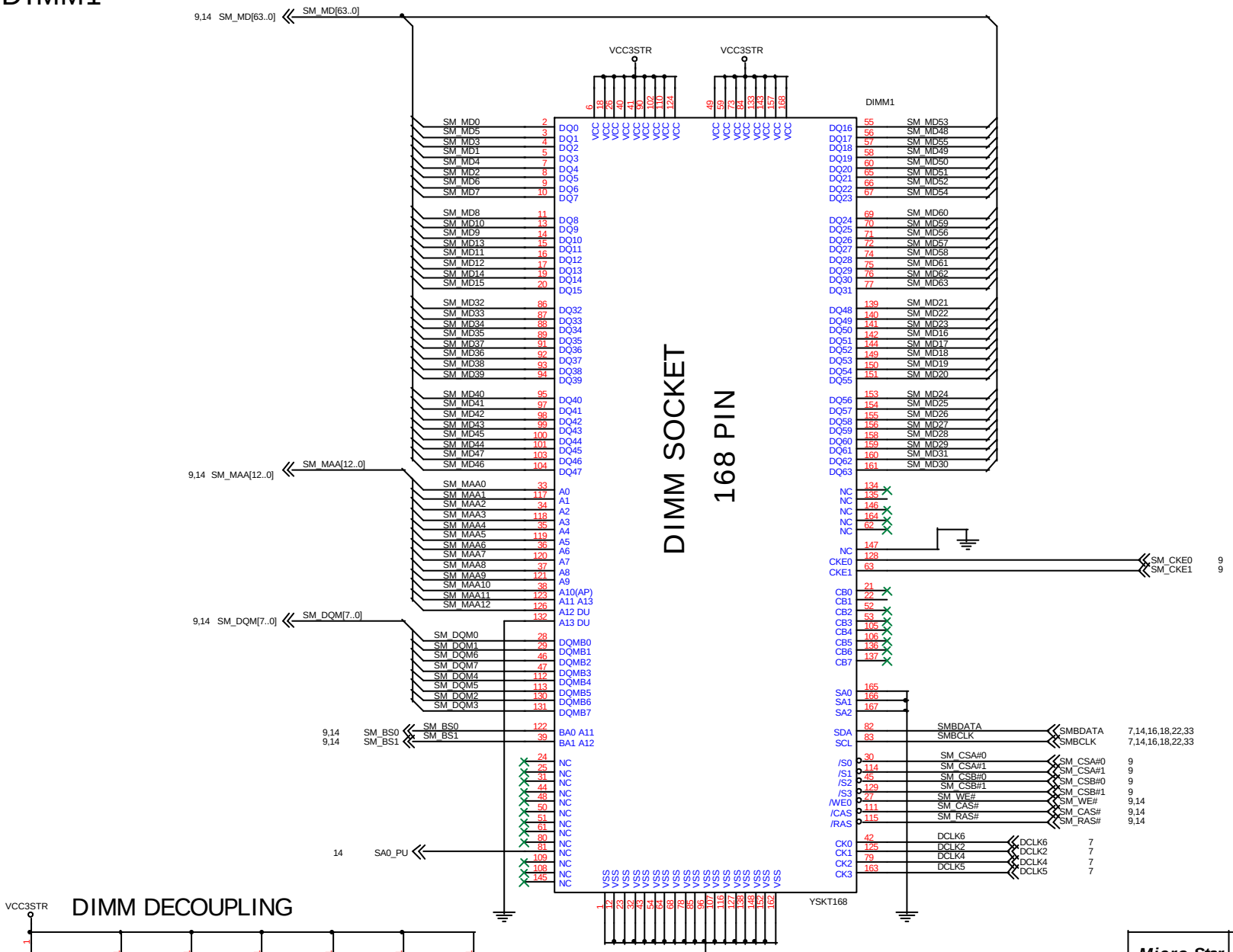

DIMM DECOUPLING

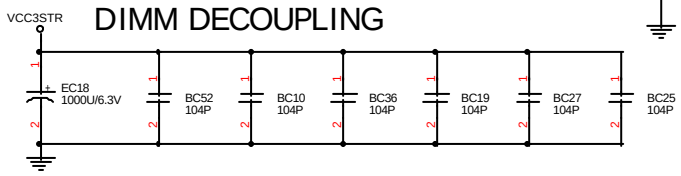

Micro-Star	Title: MS-6315	Rev: 20A
Document Number: System Memory: DIMM1		
Last Revision Date: Friday, September 22, 2000	Sheet 13 of 34	

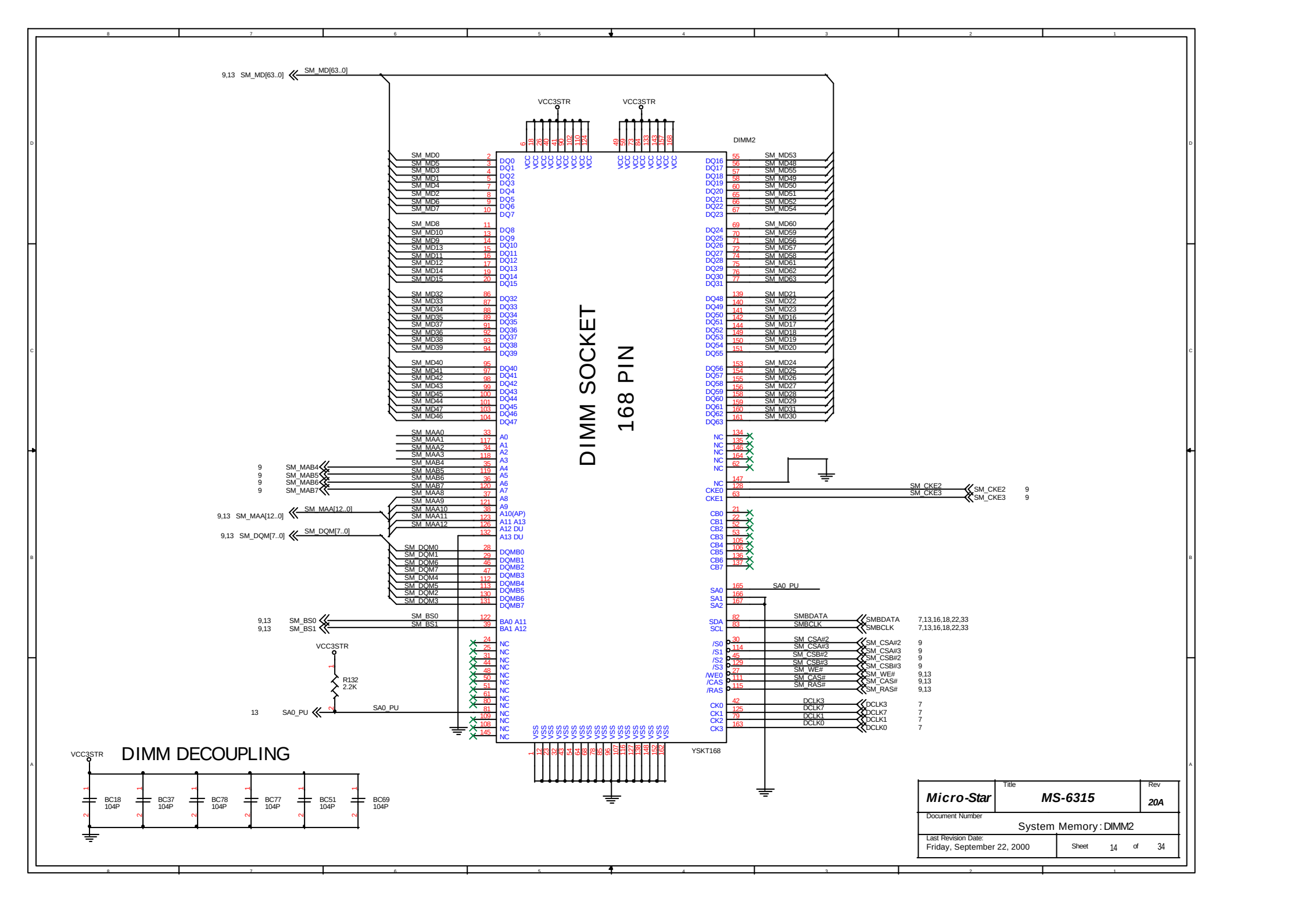
DIMM SOCKET
168 PIN
DIMM2
YSKT168
VCC3STR
SM_MD[63..0]
SM_MAA[12..0]
SM_DQM[7..0]
SM_MAB4
SM_MAB5
SM_MAB6
SM_MAB7
SM_BS0
SM_BS1
SA0_PU
R132
2.2K
SM_CKE2
SM_CKE3
SMBDATA
SMBCLK
SM_CSA#2
SM_CSA#3
SM_CSB#2
SM_CSB#3
SM_WE#
SM_CAS#
SM_RAS#
DCLK3
DCLK7
DCLK1
DCLK0
DIMM DECOUPLING
BC18 104P
BC37 104P
BC78 104P
BC77 104P
BC51 104P
BC69 104P
Micro-Star
MS-6315
20A
System Memory: DIMM2
Friday, September 22, 2000
Sheet 14 of 34

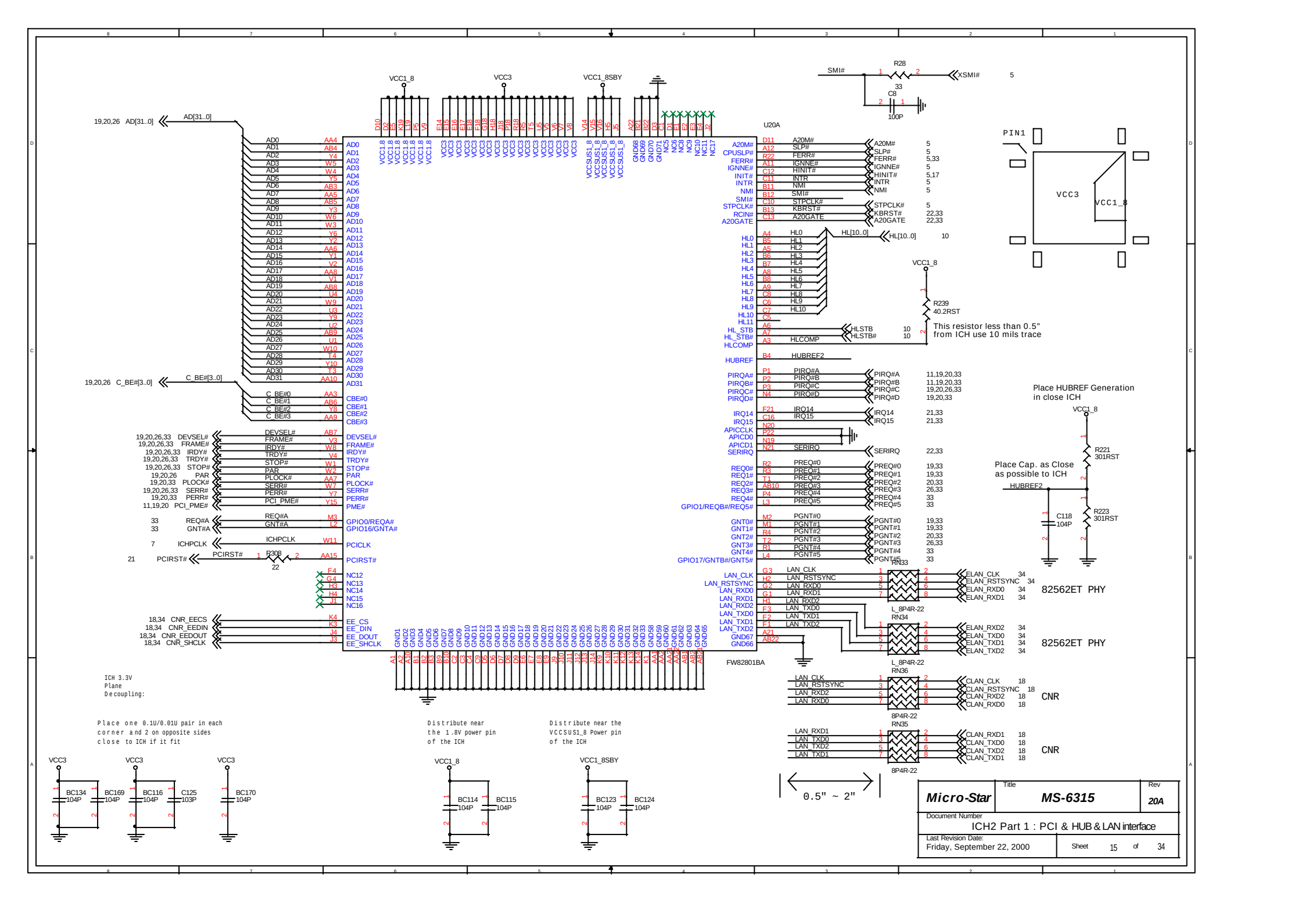
U20A
FW82801BA
AD[31..0]
C_BE#[3..0]
VCC1_8
VCC3
VCC1_8SBY
SMI#
R28
33
C8
100P
XSMI#
PIN1
R239
40.2RST
This resistor less than 0.5" from ICH use 10 mils trace
Place HUBREF Generation in close ICH
Place Cap. as Close as possible to ICH
R221
301RST
R223
301RST
C118
104P
HUBREF2
82562ET PHY
82562ET PHY
CNR
CNR
RN33
RN34
RN36
RN35
L_8P4R-22
8P4R-22
0.5" ~ 2"
ICH 3.3V Plane Decoupling:
Place one 0.1U/0.01U pair in each corner and 2 on opposite sides close to ICH if it fit
Distribute near the 1.8V power pin of the ICH
Distribute near the VCCSUS1_8 Power pin of the ICH
BC134 104P
BC169 104P
BC116 104P
C125 103P
BC170 104P
BC114 104P
BC115 104P
BC123 104P
BC124 104P
Micro-Star
Title
MS-6315
Rev
20A
Document Number
ICH2 Part 1 : PCI & HUB & LAN interface
Last Revision Date:
Friday, September 22, 2000
Sheet 15 of 34

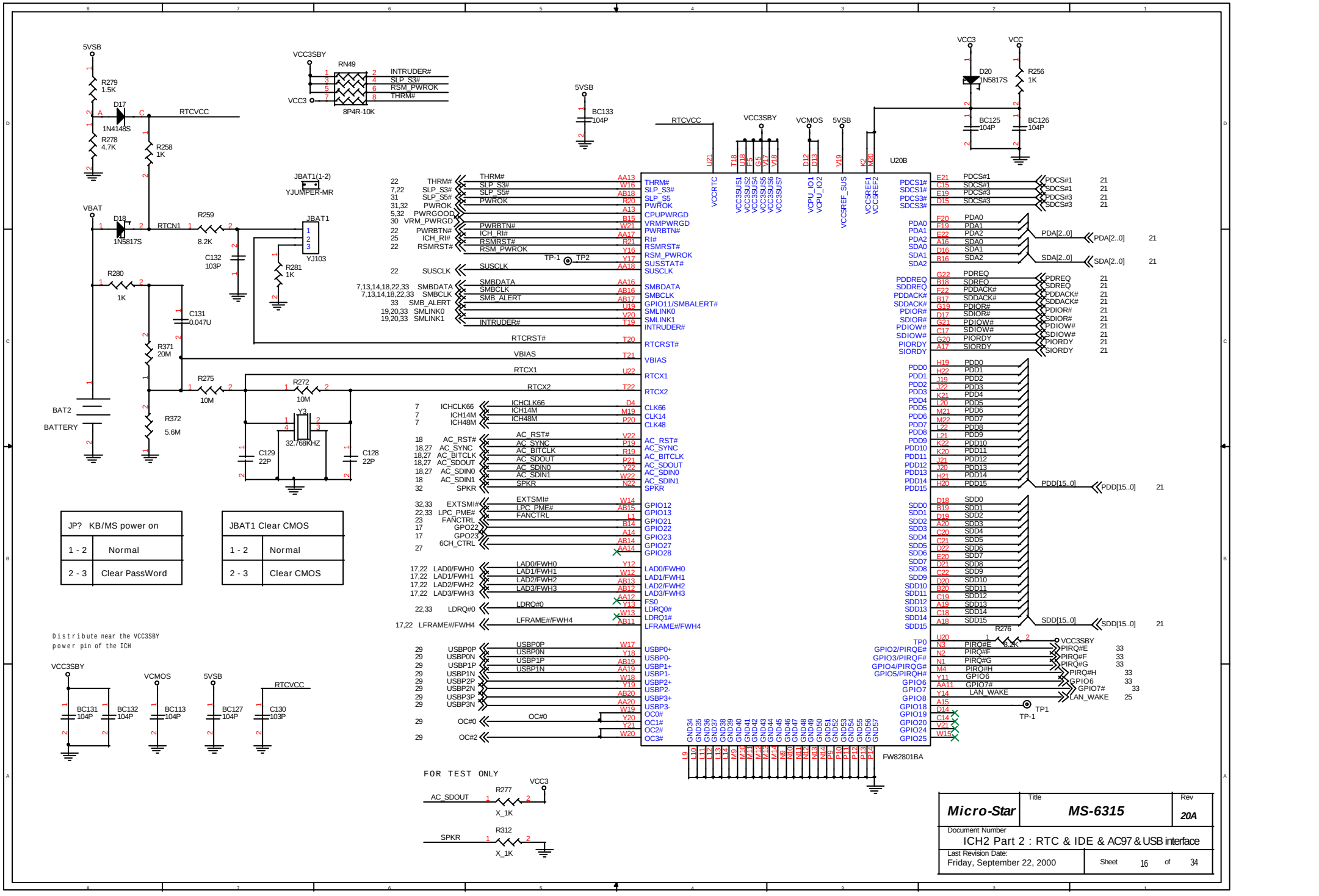

Micro-Star	Title: MS-6315
	Rev: 20A
Document Number	ICH2 Part 2 : RTC & IDE & AC97 & USB interface
Last Revision Date: Friday, September 22, 2000	Sheet 16 of 34

Firware Hub (FWH)

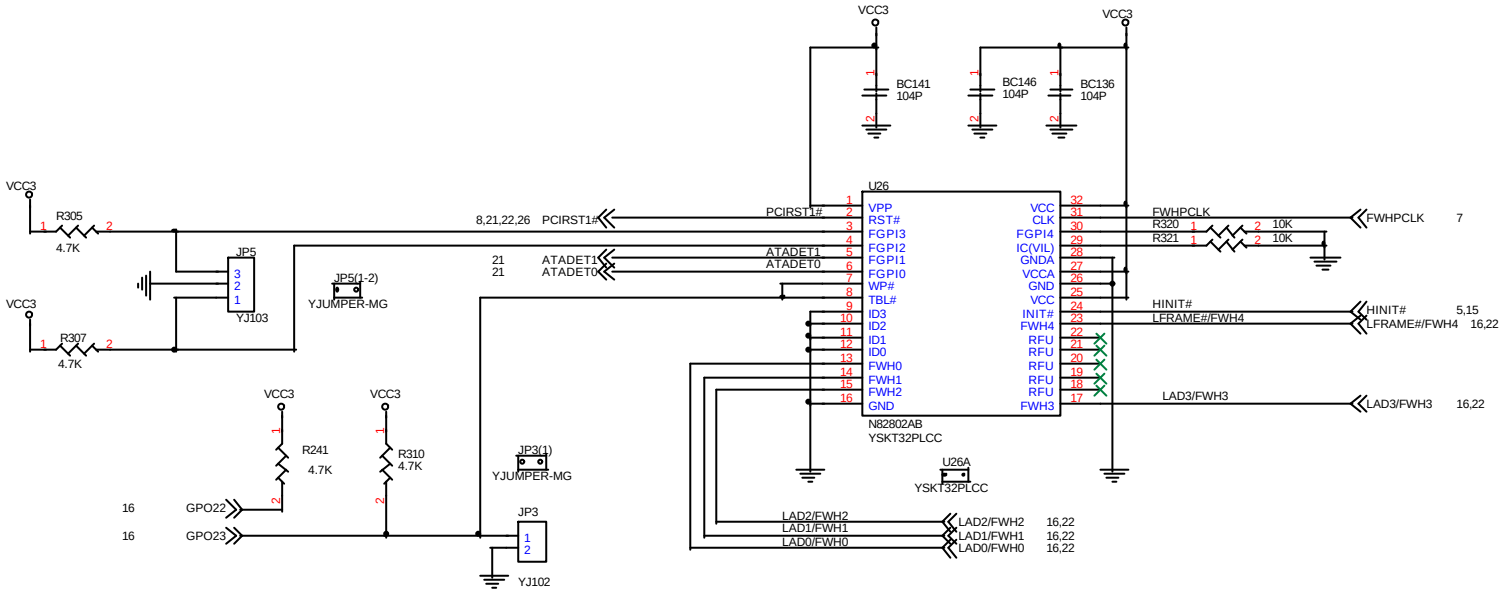

JP5 BIOS Update Configuration	
1 - 2	Normal Mode
2 - 3	Boot auto clear CMOS
OPEN	Flash from FDD

*

JP3 BIOS Update	
SHORT	Locked
OPEN	Unlocked

Micro-Star	Title: MS-6315	Rev: 20A
Document Number: Firware HUB (FWH)		
Last Revision Date: Friday, September 22, 2000	Sheet 17 of 34	

CNR RISER

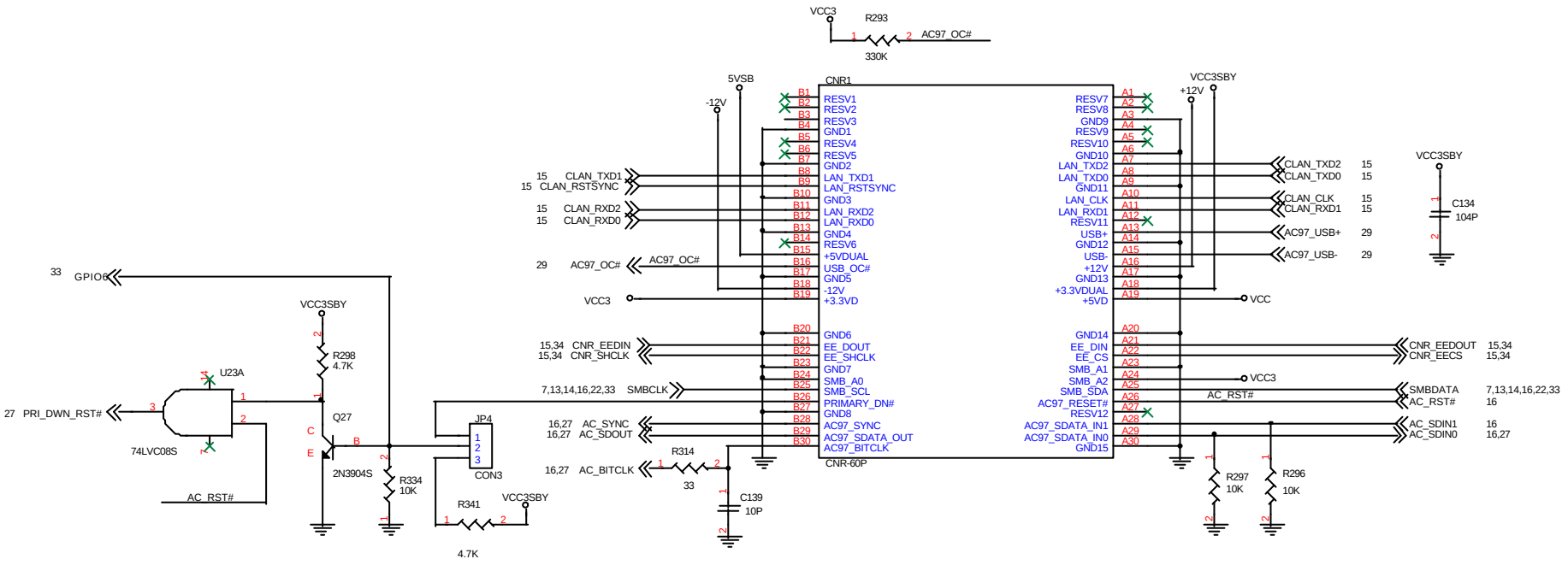

JP4	AUDIO DOWN
1 - 2	Auto mode
2 - 3	Primary audio codec onboard

Micro-Star	Title: MS-6315	Rev: 20A
Document Number: CNR Slot		
Last Revision Date: Wednesday, October 11, 2000	Sheet 18 of 34	

PCI Connectors

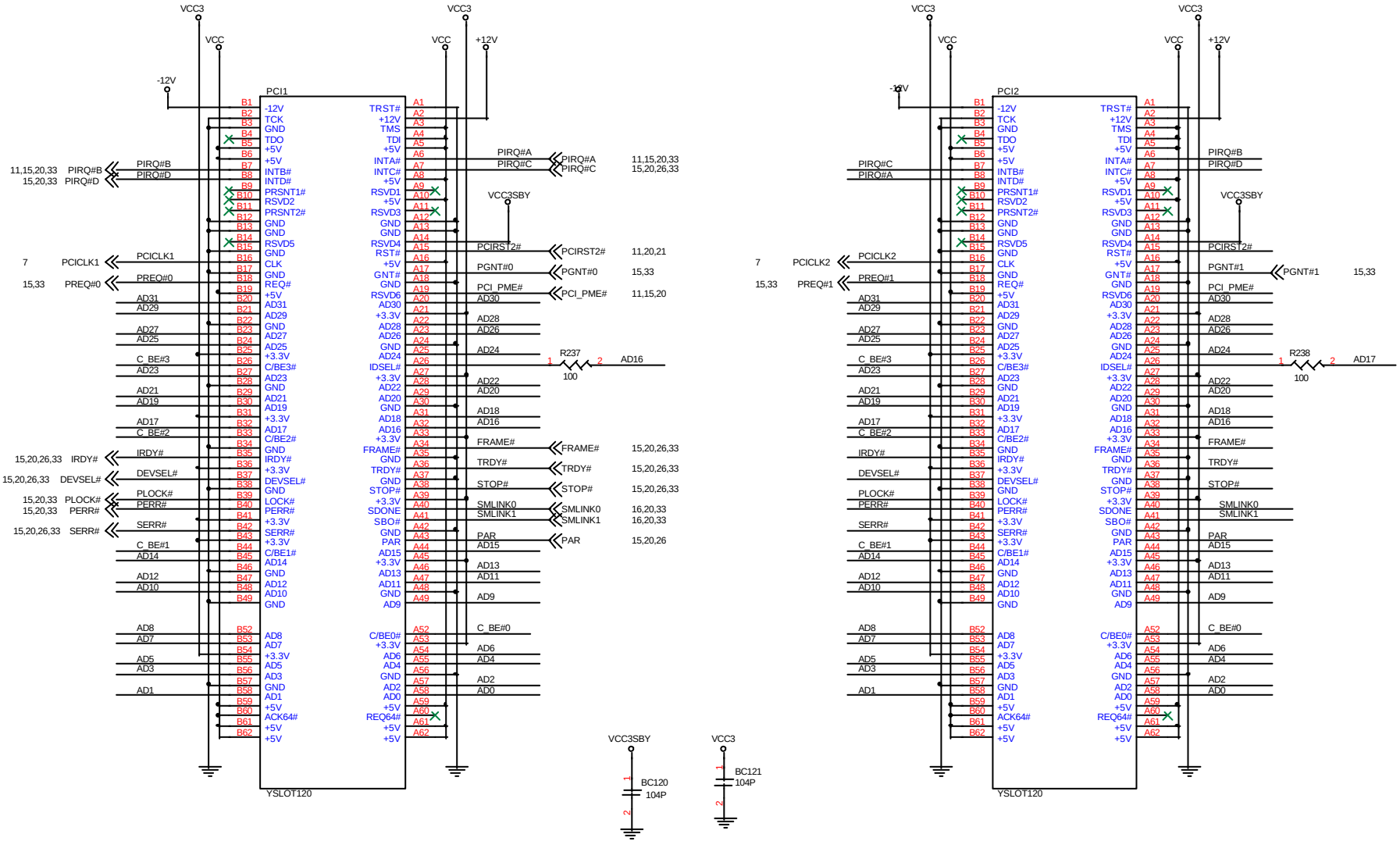

Micro-Star	Title: MS-6315		Rev: 20A
Document Number: PCI Slot 1 & 2			
Last Revision Date: Friday, September 22, 2000		Sheet 19 of 34	

PCI Slot

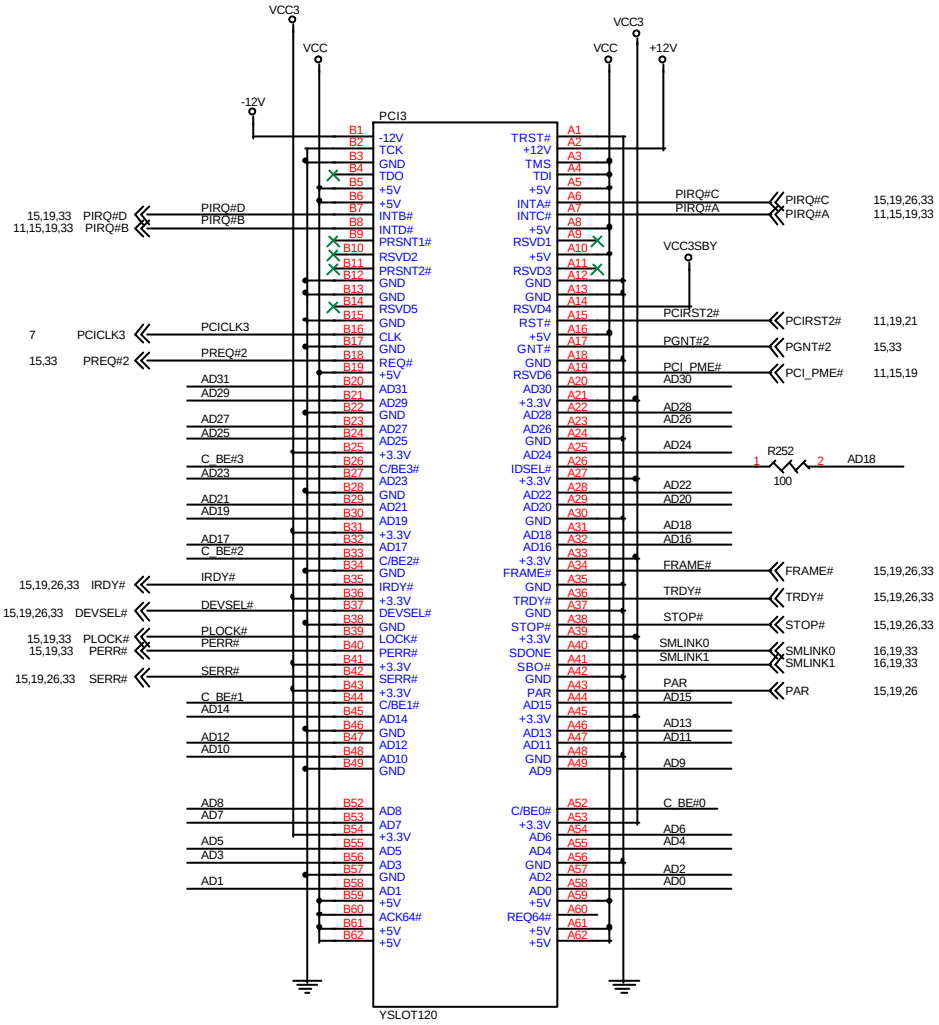

15,19,26 AD[31..0] AD[31..0]

15,19,26 C_BE#[3..0] C_BE#[3..0]

Micro-Star	Title: MS-6315	Rev: 20A
Document Number: PCI Slot 3		
Last Revision Date: Friday, September 22, 2000	Sheet 20 of 34	

ATA66 IDE CONNECTORS

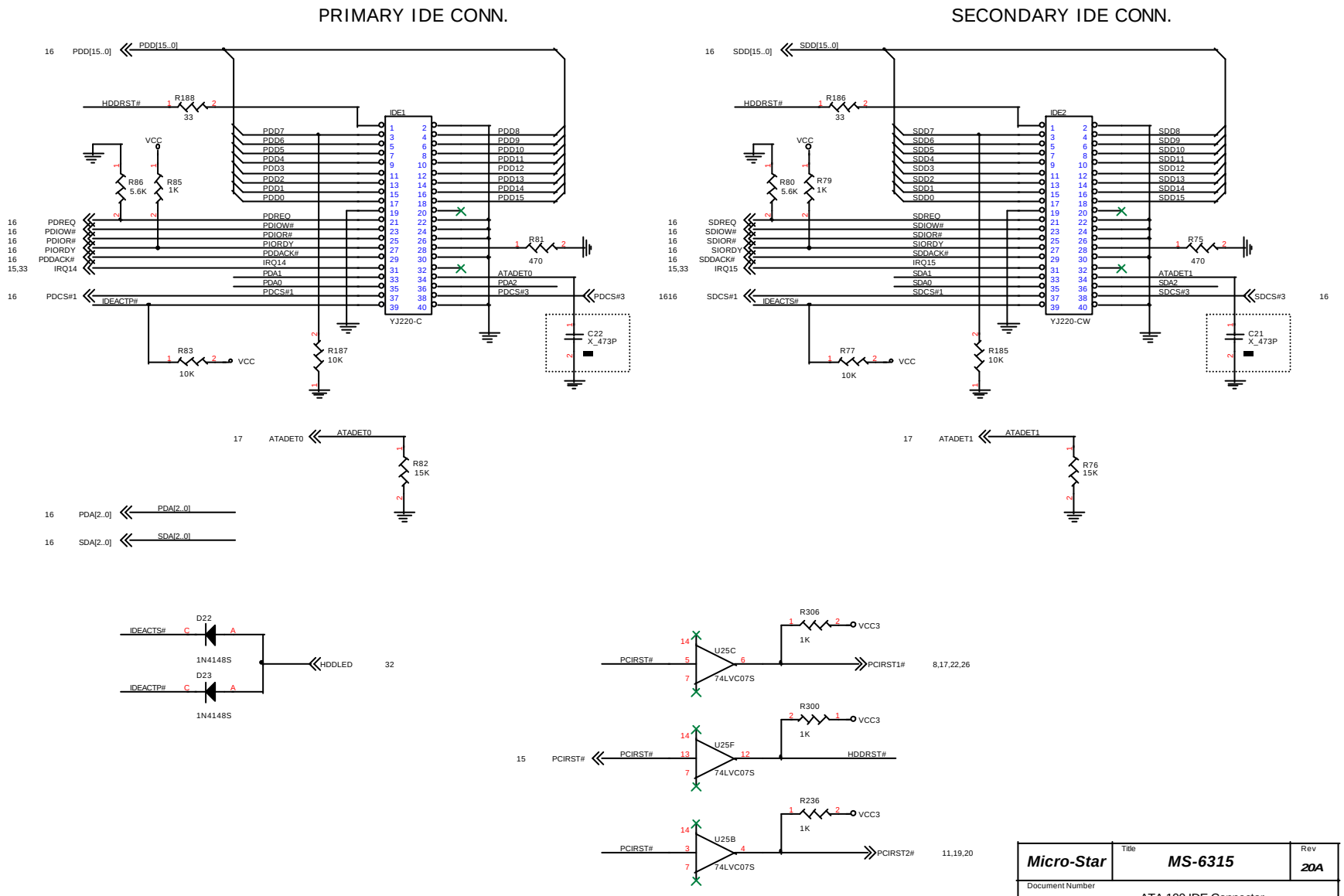

Micro-Star	Title: MS-6315		Rev: 20A
Document Number: ATA 100 IDE Connector			
Last Revision Date: Friday, September 22,2000	Sheet 21 of 34		

Super I/O

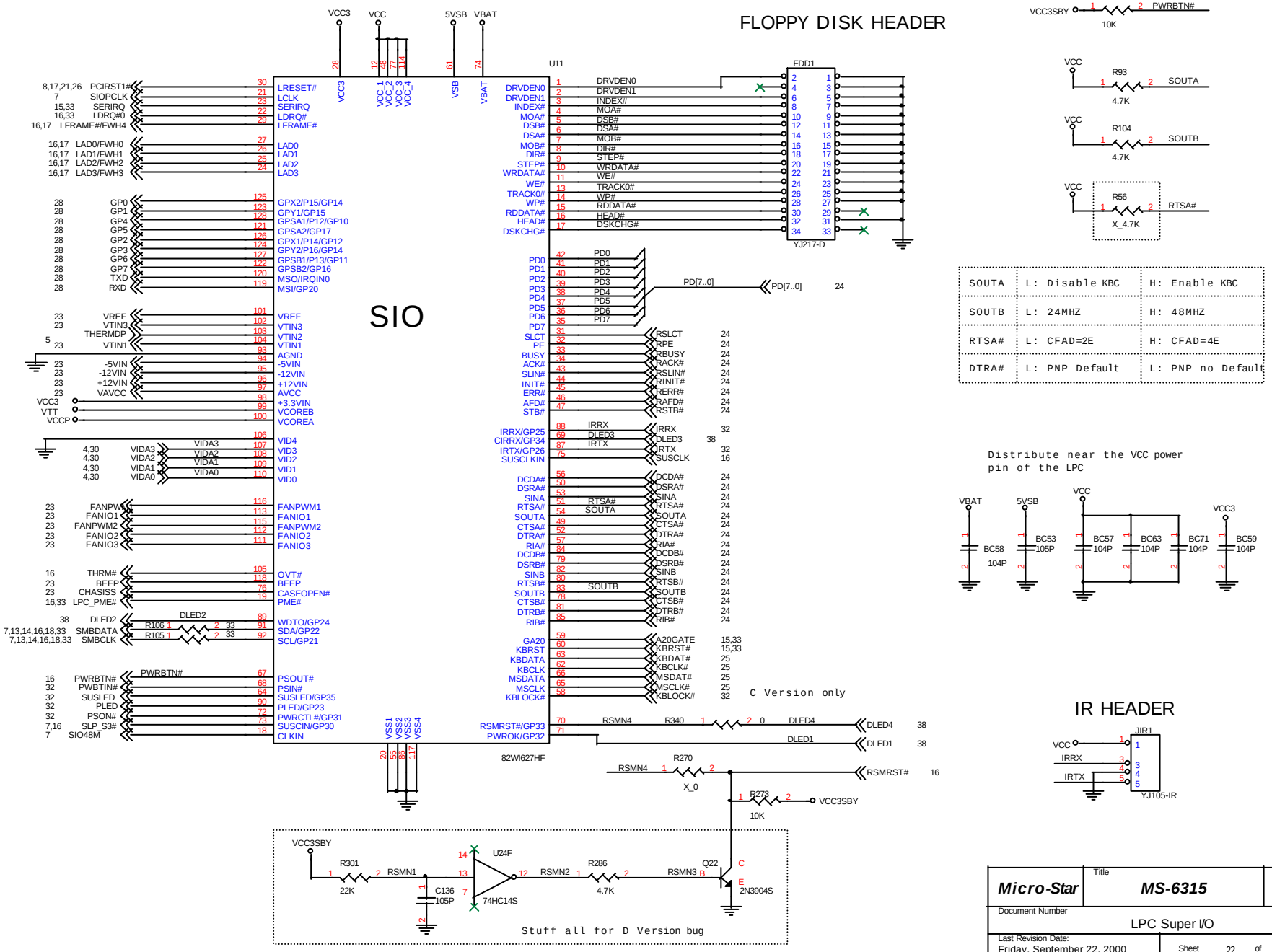

SOUTA	L: Disable KBC	H: Enable KBC
SOUTB	L: 24MHZ	H: 48MHZ
RTSA#	L: CFAD=2E	H: CFAD=4E
DTRA#	L: PNP Default	L: PNP no Default

Micro-Star	Title: MS-6315	Rev: 20A
Document Number: LPC Super I/O		
Last Revision Date: Friday, September 22, 2000	Sheet 22 of 34	

Hardware Monitor

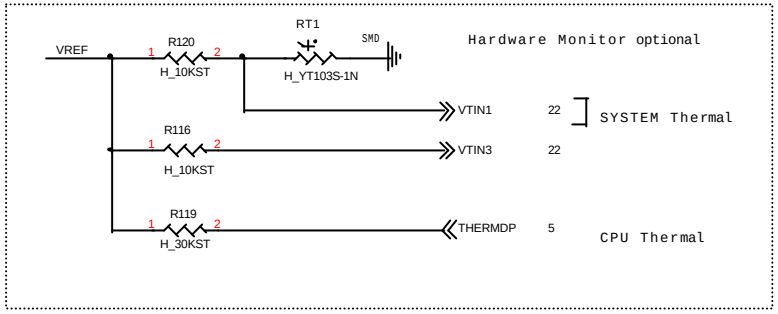

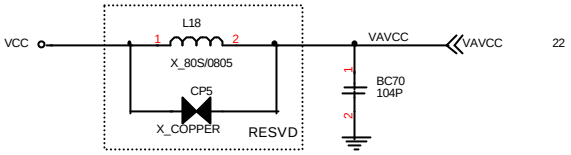

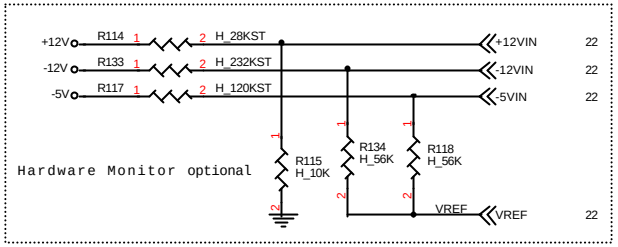

Chasiss Intrusion Header

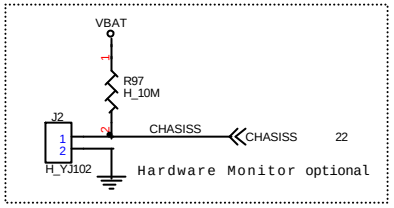

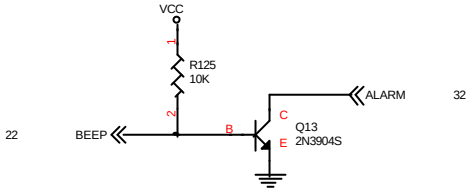

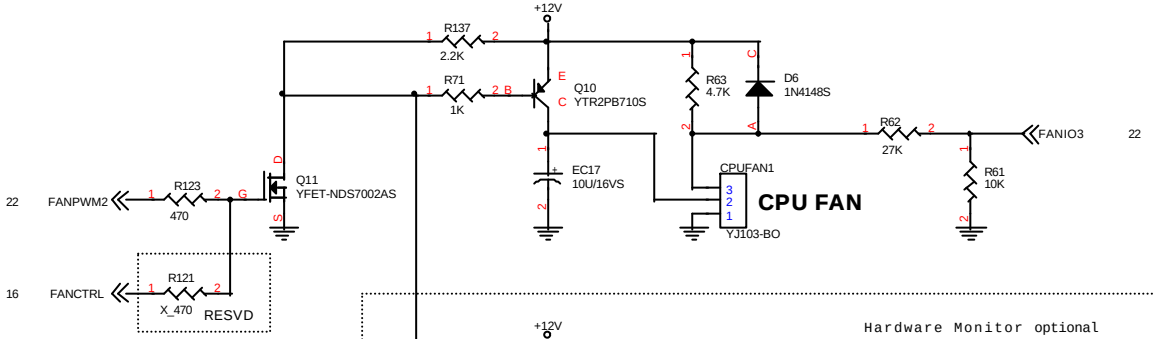

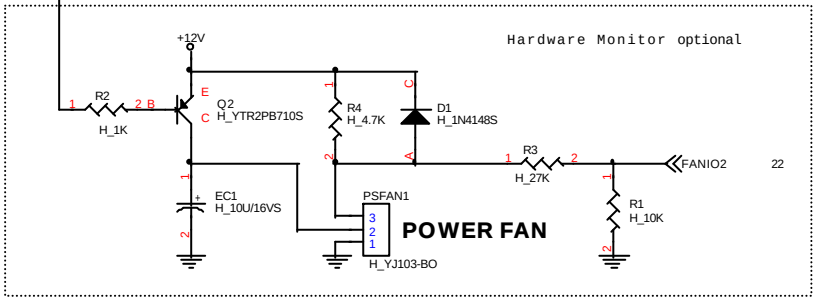

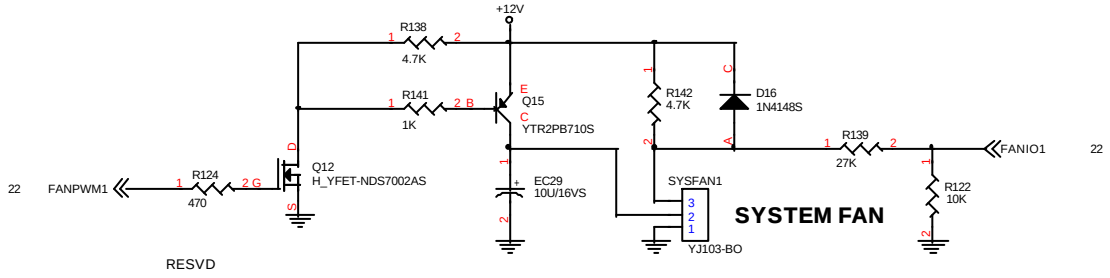

Micro-Star	Title: MS-6315	Rev: 20A
Document Number: Hardware Monitor		
Last Revision Date: Friday, September 22, 2000	Sheet 23 of 34	

Parallel Port / COM1port & COM2 Header

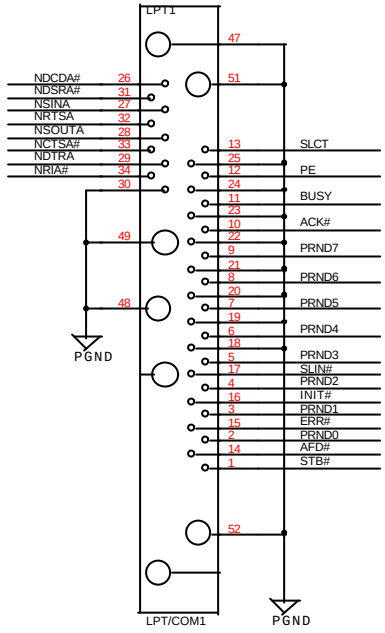

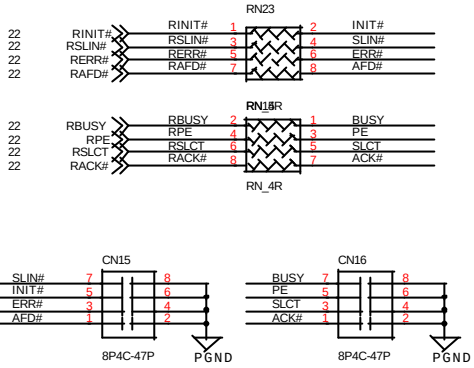

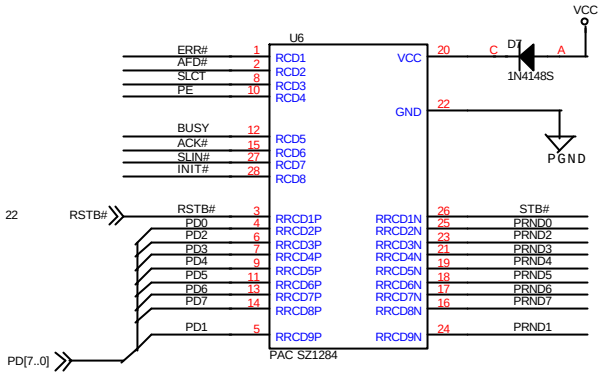

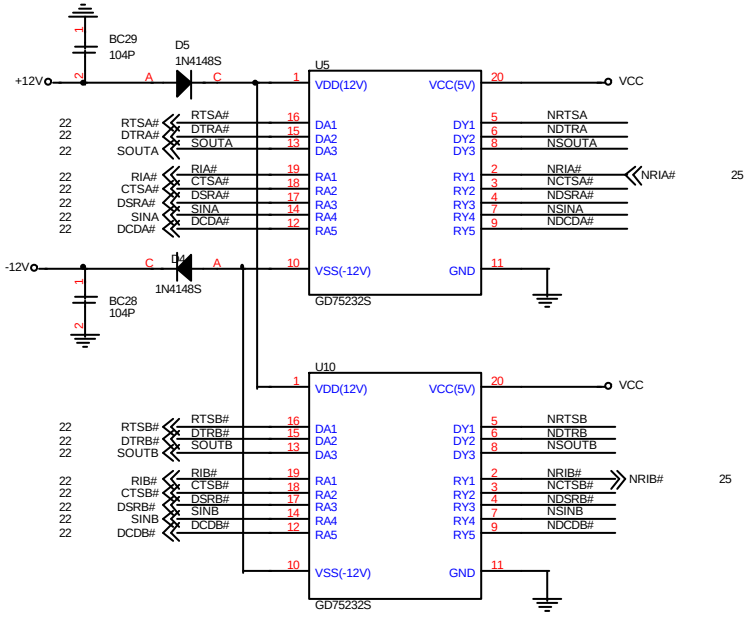

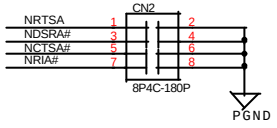

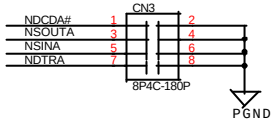

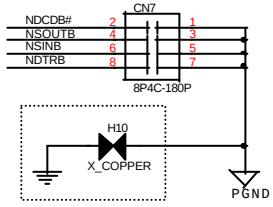

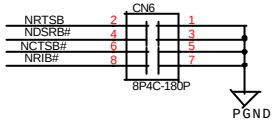

COM2 HEADER

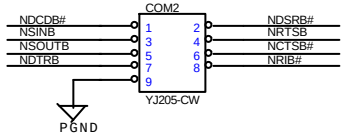

Micro-Star	Title: MS-6315	Rev: 20A
Document Number: Parallel Port Header		
Last Revision Date: Friday, September 22, 2000	Sheet 24 of 34	

KEYBOARD/MOUSE PORTS

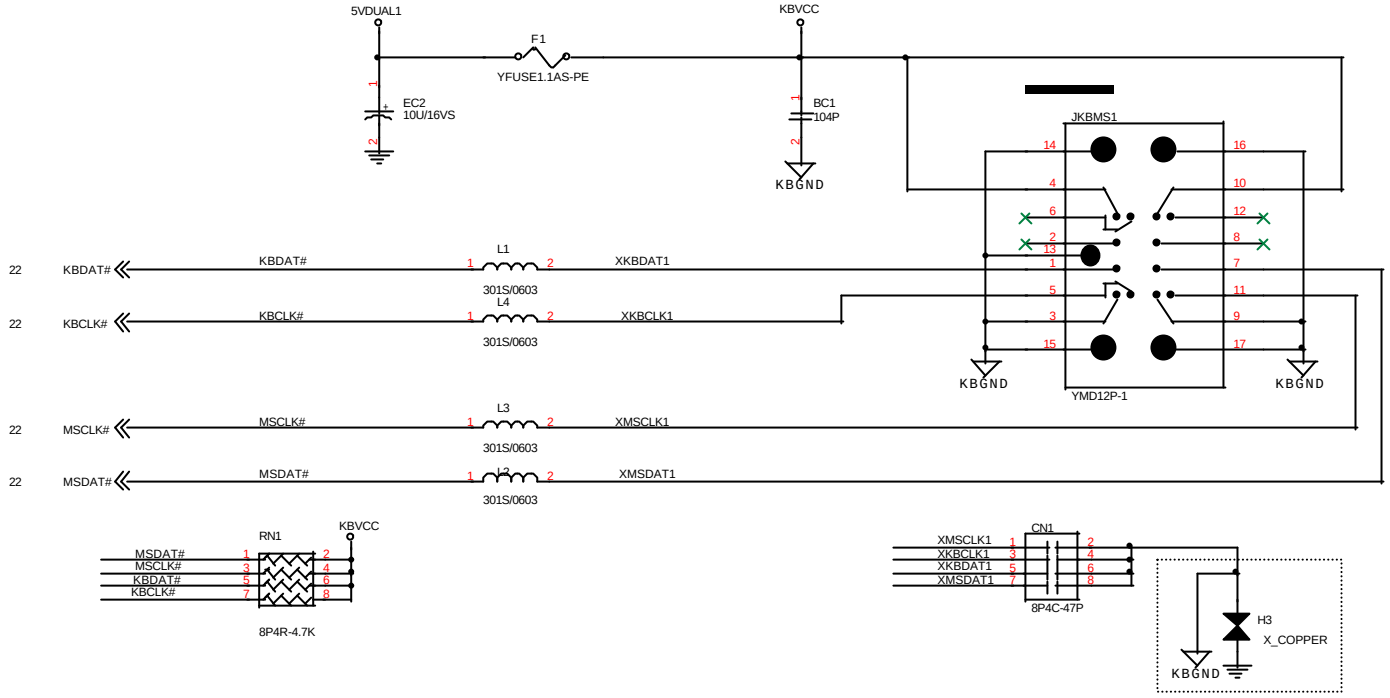

LAN WAKEUP HEADER

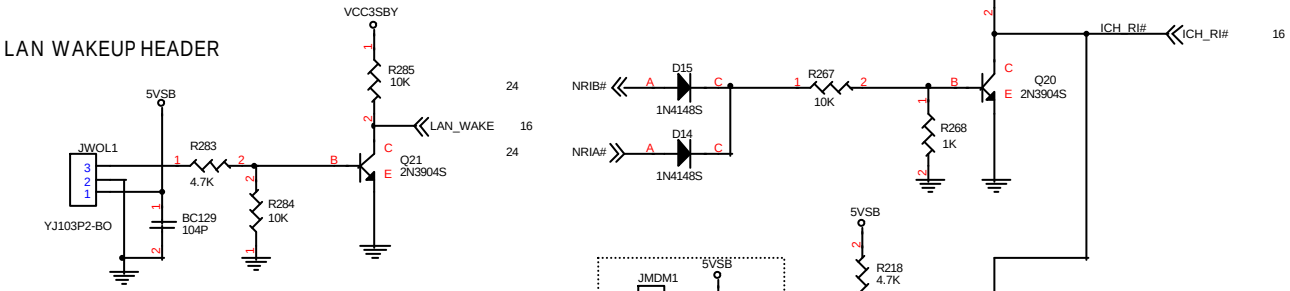

INTERNAL MODEM WAKEUP HEADER

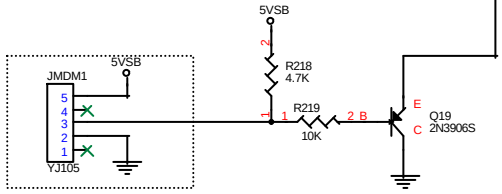

Micro-Star	Title: MS6315	Rev: 20A
	Document Number: Keyboard board / Mouse port	
Last Revision Date: Friday, September 22, 2000	Sheet 25 of 34	

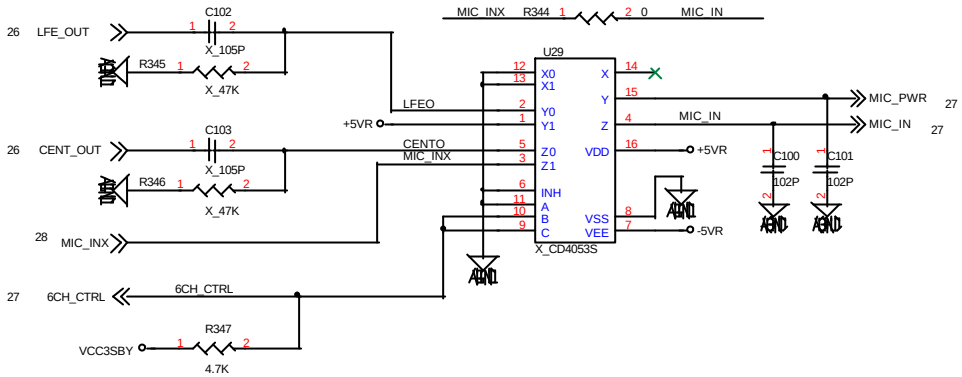

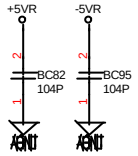

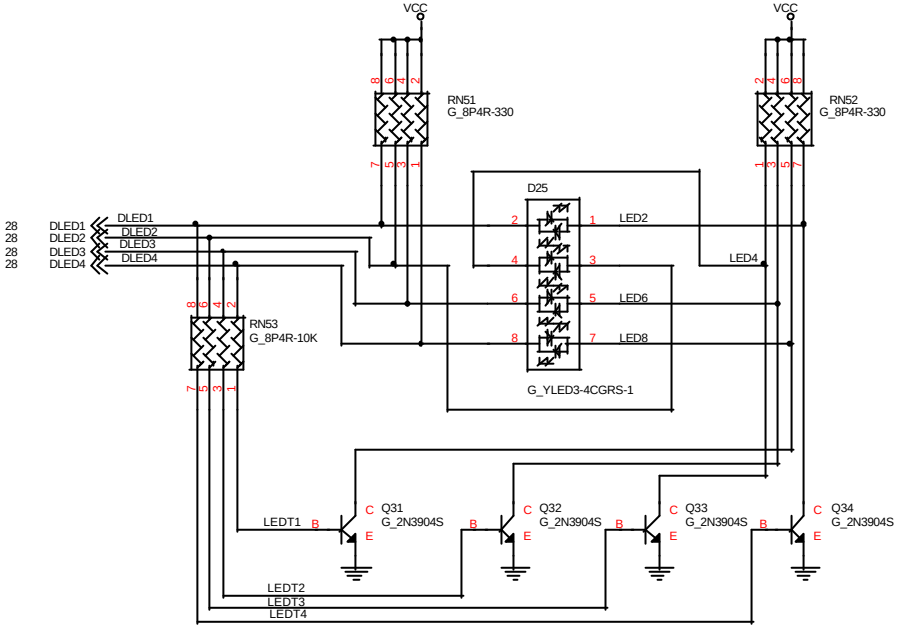

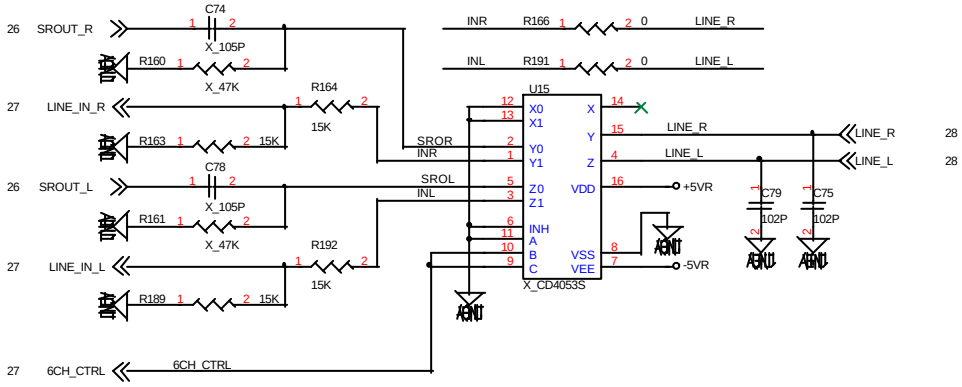

Micro-Star	Title: MS6315	Rev: 20A
Document Number: PCI Hardware Audio		
Last Revision Date: Friday, September 22, 2000	Sheet 26 of 34	

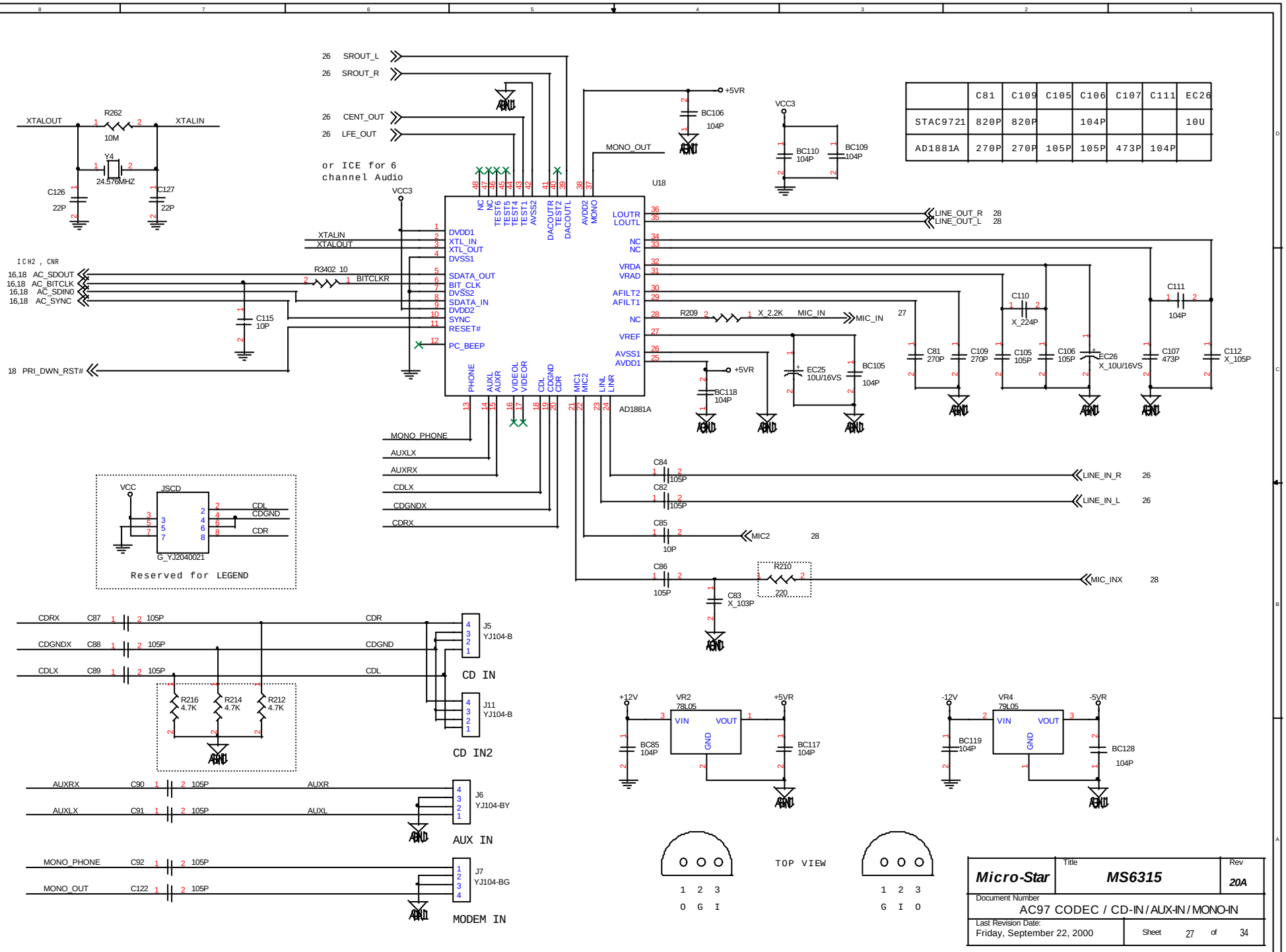

	C81	C109	C105	C106	C107	C111	EC26
STAC9721	820P	820P		104P			10U
AD1881A	270P	270P	105P	105P	473P	104P	

Micro-Star	Title: MS6315		Rev: 20A
	Document Number: AC97 CODEC / CD-IN / AUX-IN / MONO-IN		
	Last Revision Date: Friday, September 22, 2000	Sheet 27 of 34	

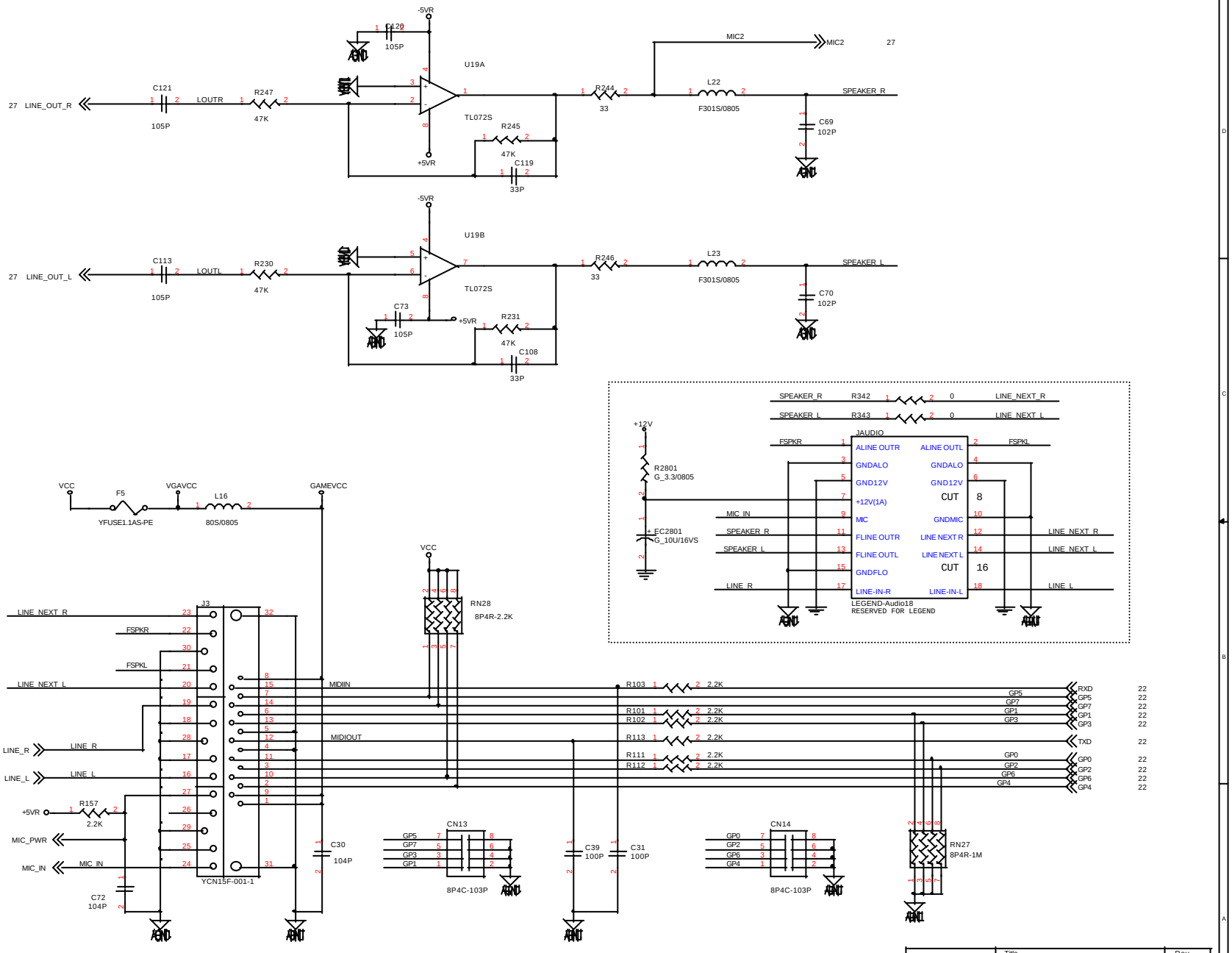
-5VR
C120
105P
U19A
C121
LOUTR
R247
47K
105P
27 LINE_OUT_R
TL072S
R245
47K
C119
33P
+5VR
R244
33
MIC2
L22
F301S/0805
SPEAKER_R
C69
102P
U19B
C113
LOUTL
R230
47K
105P
27 LINE_OUT_L
C73
105P
R231
47K
C108
33P
R246
33
L23
F301S/0805
SPEAKER_L
C70
102P
SPEAKER_R R342 0 LINE_NEXT_R
SPEAKER_L R343 0 LINE_NEXT_L
+12V
R2801
G_3.3/0805
EC2801
G_10U/16VS
JAUDIO
FSPKR
FSPKL
ALINE OUTR
ALINE OUTL
GNDALO
GND12V
+12V(1A)
MIC
FLINE OUTR
FLINE OUTL
GNDFLO
LINE-IN-R
LINE-IN-L
GNDMIC
LINE NEXT R
LINE NEXT L
CUT 8
CUT 16
MIC_IN
SPEAKER_R
SPEAKER_L
LINE_R
LINE_NEXT_R
LINE_NEXT_L
LINE_L
LEGEND-Audio18
RESERVED FOR LEGEND
VCC
F5
YFUSE1.1AS-PE
VGAVCC
L16
80S/0805
GAMEVCC
VCC
RN28
8P4R-2.2K
J3
YCN15F-001-1
LINE_NEXT_R
FSPKR
FSPKL
LINE_NEXT_L
MIDIIN
MIDIOUT
26 LINE_R
26 LINE_L
R157
2.2K
+5VR
27 MIC_PWR
27 MIC_IN
C72
104P
C30
104P
CN13
8P4C-103P
GP5
GP7
GP3
GP1
C39
100P
C31
100P
CN14
8P4C-103P
GP0
GP2
GP6
GP4
R103 2.2K
R101 2.2K
R102 2.2K
R113 2.2K
R111 2.2K
R112 2.2K
RN27
8P4R-1M
RXD
TXD
22
GAME PORT HEADER
Micro-Star
Title
MS6315
Rev
20A
Document Number
Audio Amplifier & Game port Connector
Last Revision Date:
Friday, September 22,2000
Sheet 28 of 34

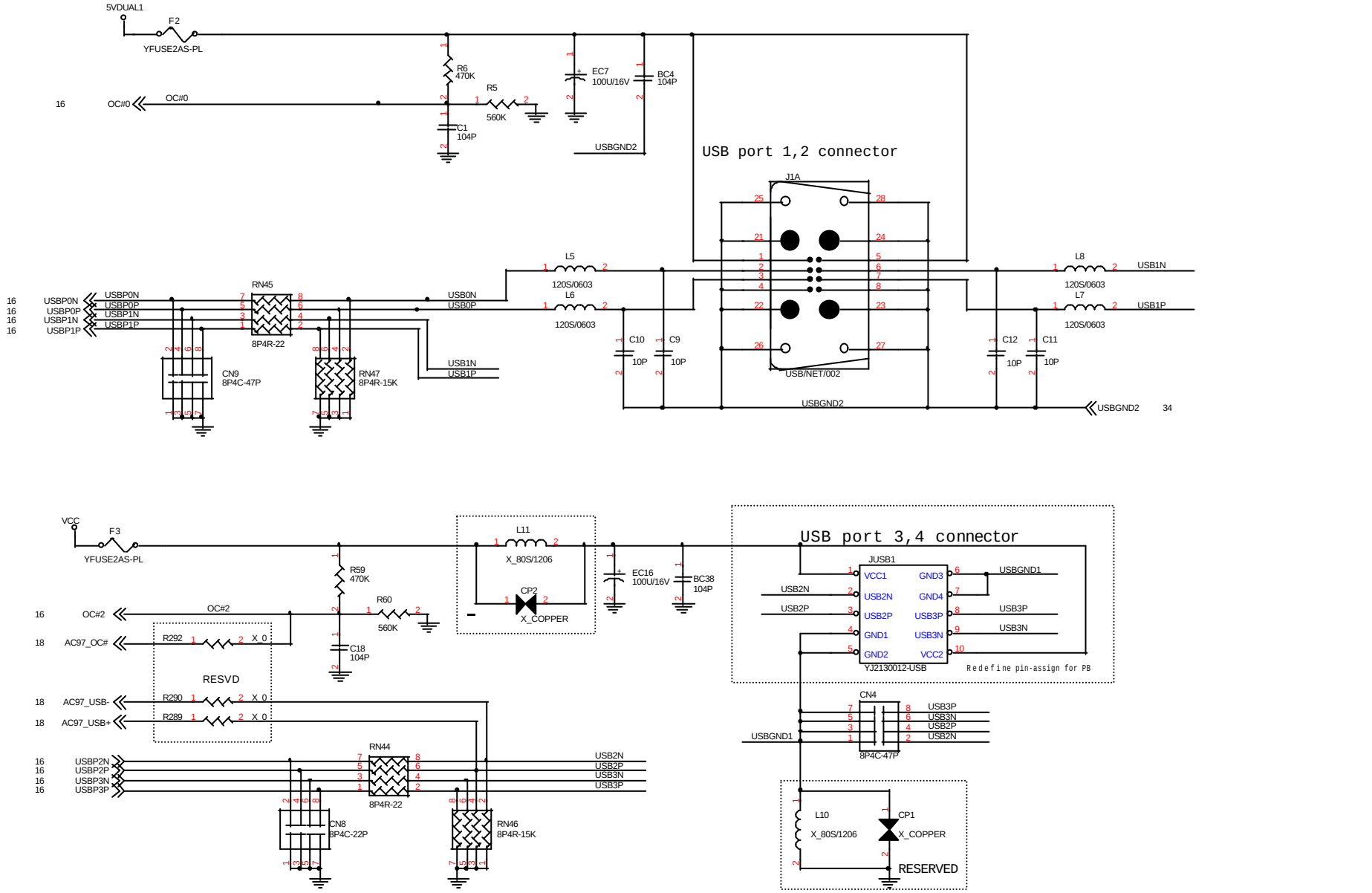

Micro-Star	Title: MS6315	Rev: 20A
Document Number: USB Connector		
Last Revision Date: Friday, September 22, 2000	Sheet 29 of 34	

VRM 8.4

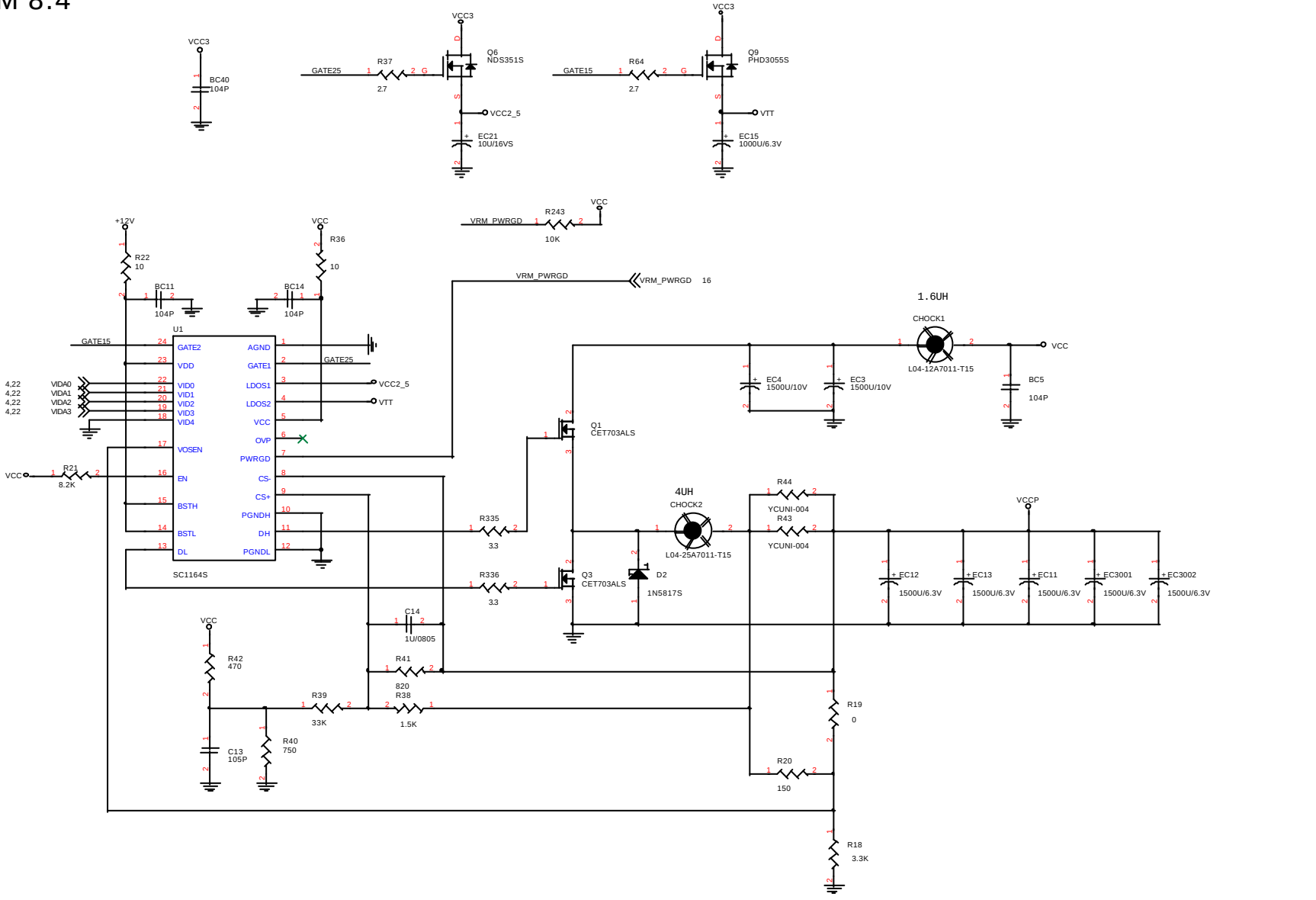

Micro-Star	Title: MS6315	Rev: 20A
Document Number: VRM 8.4 (SC1164) / VCCP , VCC2_5 , VTT		
Last Revision Date: Friday, September 22,2000	Sheet 30 of 34	

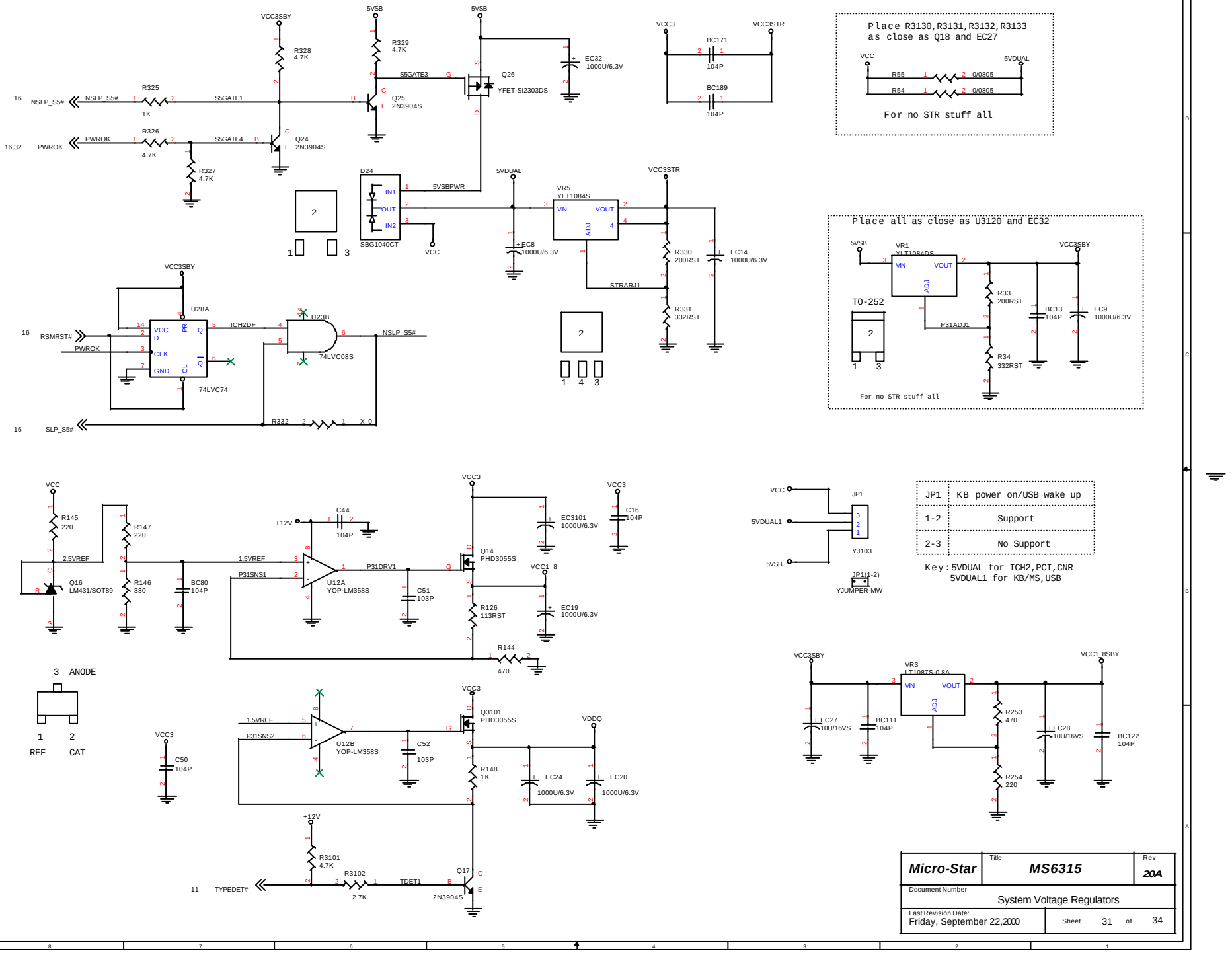
VCC3SBY
5VSB
5VSB
R328 4.7K
R329 4.7K
S5GATE3
Q26
YFET-SI2303DS
EC32 1000U/6.3V
VCC3
VCC3STR
BC171 104P
BC189 104P
16
NSLP_S5#
R325 1K
S5GATE1
Q25 2N3904S
16,32
PWROK
R326 4.7K
S5GATE4
Q24 2N3904S
R327 4.7K
D24
SBG1040CT
5VSBPWR
5VDUAL
VR5 YLT1084S
VIN
VOUT
ADJ
EC8 1000U/6.3V
VCC3STR
R330 200RST
EC14 1000U/6.3V
STRARJ1
R331 332RST
VCC
Place R3130,R3131,R3132,R3133 as close as Q18 and EC27
VCC
5VDUAL
R55 0/0805
R54 0/0805
For no STR stuff all
Place all as close as U3120 and EC32
5VSB
VR1 YLT1084DS
VCC3SBY
TO-252
P31ADJ1
R33 200RST
R34 332RST
BC13 104P
EC9 1000U/6.3V
For no STR stuff all
U28A
74LVC74
U23B
74LVC08S
RSMRST#
PWROK
ICH2DF
NSLP_S5#
R332
SLP_S5#
C44 104P
+12V
EC3101 1000U/6.3V
C16 104P
R145 220
R147 220
2.5VREF
Q16 LM431/SOT89
R146 330
BC80 104P
1.5VREF
P31SNS1
U12A YOP-LM358S
P31DRV1
Q14 PHD3055S
C51 103P
VCC1_8
R126 113RST
EC19 1000U/6.3V
R144 470
3 ANODE
1 REF
2 CAT
JP1
YJ103
JP1(1-2)
YJUMPER-MW
5VDUAL1
JP1 | KB power on/USB wake up
1-2 | Support
2-3 | No Support
Key:5VDUAL for ICH2,PCI,CNR
5VDUAL1 for KB/MS,USB
C50 104P
P31SNS2
U12B YOP-LM358S
Q3101 PHD3055S
C52 103P
VDDQ
R148 1K
EC24 1000U/6.3V
EC20 1000U/6.3V
R3101 4.7K
R3102 2.7K
TDET1
Q17 2N3904S
11
TYPEDET#
VR3 LT1087S-0.8A
EC27 10U/16VS
BC111 104P
R253 470
EC28 10U/16VS
BC122 104P
R254 220
Micro-Star
MS6315
20A
System Voltage Regulators
Friday, September 22,2000
Sheet 31 of 34

Front Panel & Power Connector

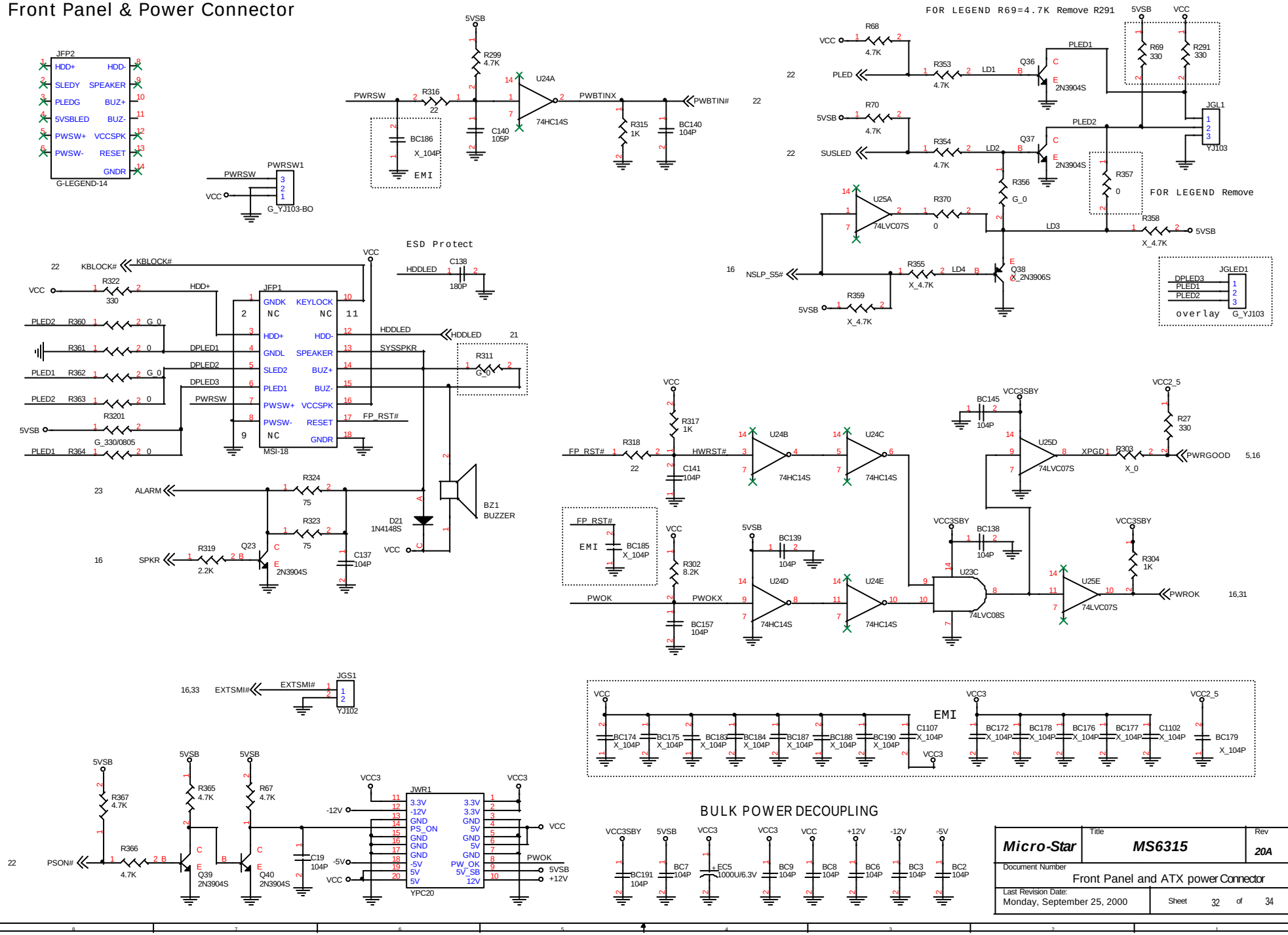

Micro-Star	Title: MS6315	Rev: 20A
Document Number: Front Panel and ATX power Connector		
Last Revision Date: Monday, September 25, 2000	Sheet 32 of 34	

PULL-UP RESISTORS

PCI BUS

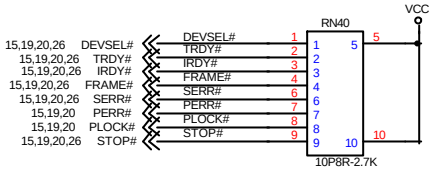

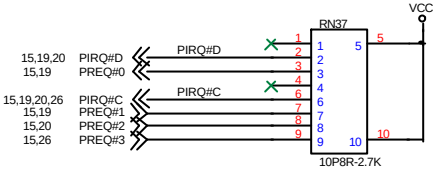

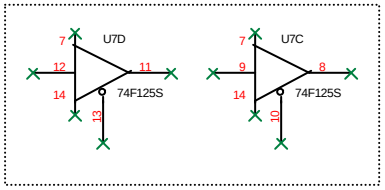

ICH

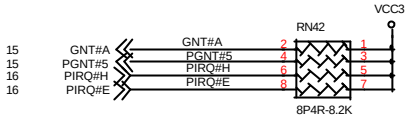

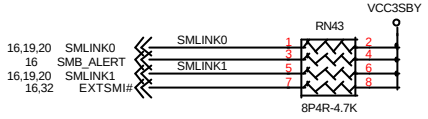

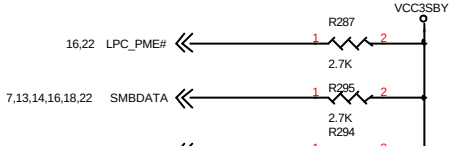

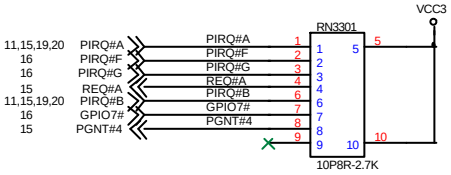

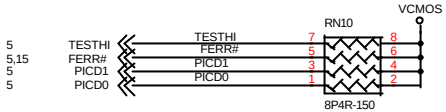

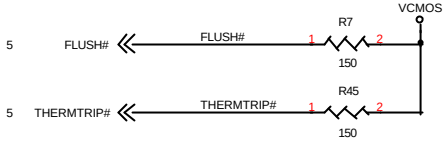

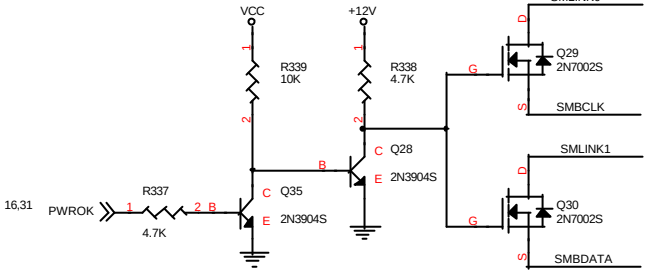

Micro-Star	Title: MS6315	Rev: 20A
Document Number: Pull-Up Resistors		
Last Revision Date: Friday, September 22, 2000	Sheet 33 of 34	

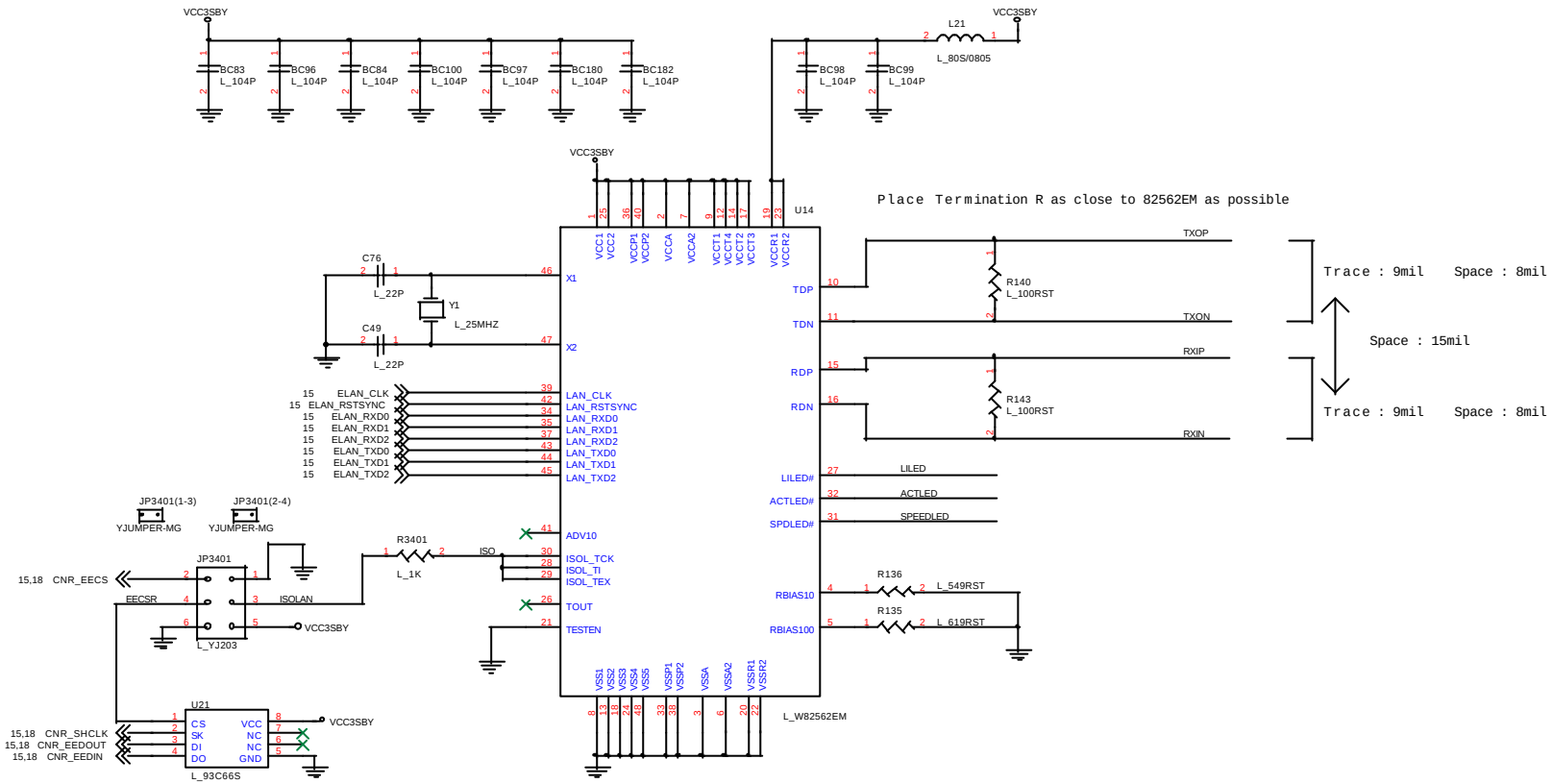

JP3401	On board LAN
1-3,2-4	Enable
3-5,4-6	Disable

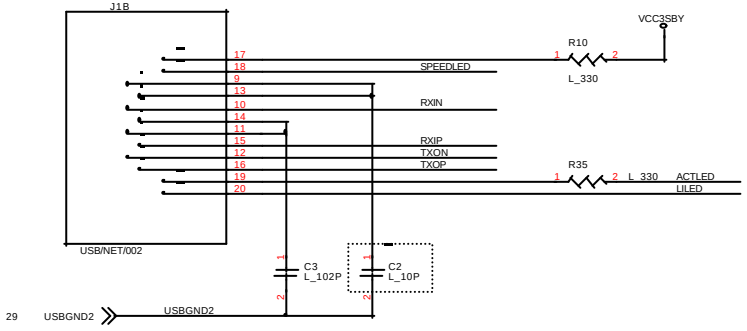

Micro-Star	Title: MS6315		Rev: 20A
Document Number: LAN Connector & I562EM (Kinnereth+)			
Last Revision Date: Friday, September 22,2000	Sheet 34 of 34		

MS-6315 5.0 1.0 Micro-ATX W/S LAN

Intel FCPGA / FCPGA2 370 Processor

Intel 815E /815EP B-STEP Chipset

Winbond 83627HF-AW / 83627F +W83782D

Intel82562ET / 82562EM Chipset

Last Schematic Update Date:

06/07/2001

Title	Page
Cover Sheet	1
Block Diagram	2
BIOS GPIO SPEC	3
370PGA Socket	4,5
Clock Synthesizer	6
GMCH	7,8,9
AGP / AIMM Display Cache	10
Graphics Connectors	11
System Memory	12,13,14
ICH2	15,16
FWH	17
CNR Riser	18
PCI Connectors	19,20
ATA100 Connectors	21
LPC I/O	22
Hardware monitor	23
Parallel / Serial Port	24
Keyboard/Mouse Connectors	25
AC'97 Codec	26
Audio Amp	27
USB HUB & USB Connectors	28
VRM 8.5	29
Voltage Regulators	30
Front Panel / Power connector	31
Pull-up Resistors	32
LAN	33

MSI

Title: COVER PAGE

Size | Document Number: MS-6315-5.0 | Rev: 1.0

Date: Monday, October 08, 2001 Sheet 1 of 34

Block Diagram

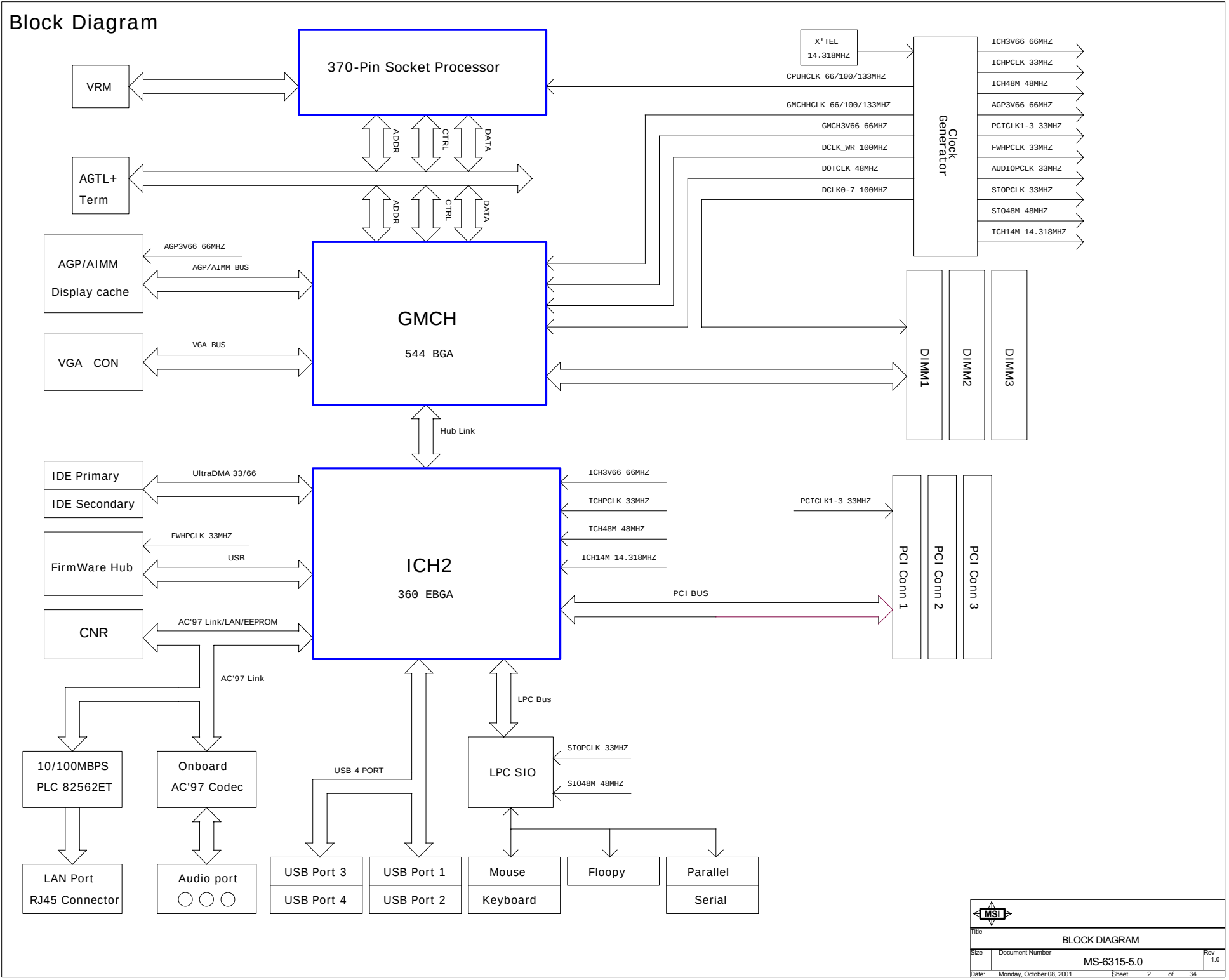

MSI		
Title	BLOCK DIAGRAM	
Size	Document Number MS-6315-5.0	Rev 1.0
Date: Monday, October 08, 2001	Sheet 2 of 34	

General Purpose I/O Spec.

ICH

GPIO Pin	Type	Function
GPIO 0		Pull up (REQ#A)
GPIO 1		PREQ#5
GPIO 2		PIRQ#E
GPIO 3		PIRQ#F
GPIO 4		PIRQ#G
GPIO 5		PIRQ#H
GPIO 6		AC97 Codec High / Disable Low / Enable
GPIO 7		PULL UP
GPIO 8		LAN Wake Up
GPIO 9		Not Implemented
GPIO 10		Not Implemented
GPIO 11		SMB_ALERT
GPIO 12		External SMI
GPIO 13		LPC PME
GPIO 14~15		Not Implemented
GPIO 16		Pull up(GNT#A)
GPIO 17		PGNT#5
GPIO 18		MAIL LED
GPIO 19~21		NC
GPIO 22		Pull up
GPIO 23		NC
GPIO 24		NC
GPIO 25		EEPROM CS Control
GPIO 26		Not Implemented
GPIO 27		LAN Control ON / OFF
GPIO 28		A20M# Control
GPIO 29~31		Not Implemented

PCI Config.

DEVICE	ICH INT Pin	IDSEL
PCI Slot 1	INTC# INTF# INTG# INTB#	AD25
PCI Slot 2	INTF# INTG# INTB# INTC#	AD26
PCI Slot 3	INTG# INTB# INTC# INTF#	AD27

FWH

GPIO Pin	Type	Function
GPI 0	I	ATA IDE 1 Detect
GPI 1	I	ATA IDE 2 Detect
GPI 2	I	CONFIGURATION
GPI 3	I	CONFIGURATION

ICH2 SMLINK0,1 Connect to PCI1,2,3 for PCI card AOL

Title	BIOS GPIO SPEC.		
Size	Document Number	MS-6315-5.0	Rev 1.0
Date: Monday, October 08, 2001	Sheet 3 of 34		

370PGA Socket Part 1

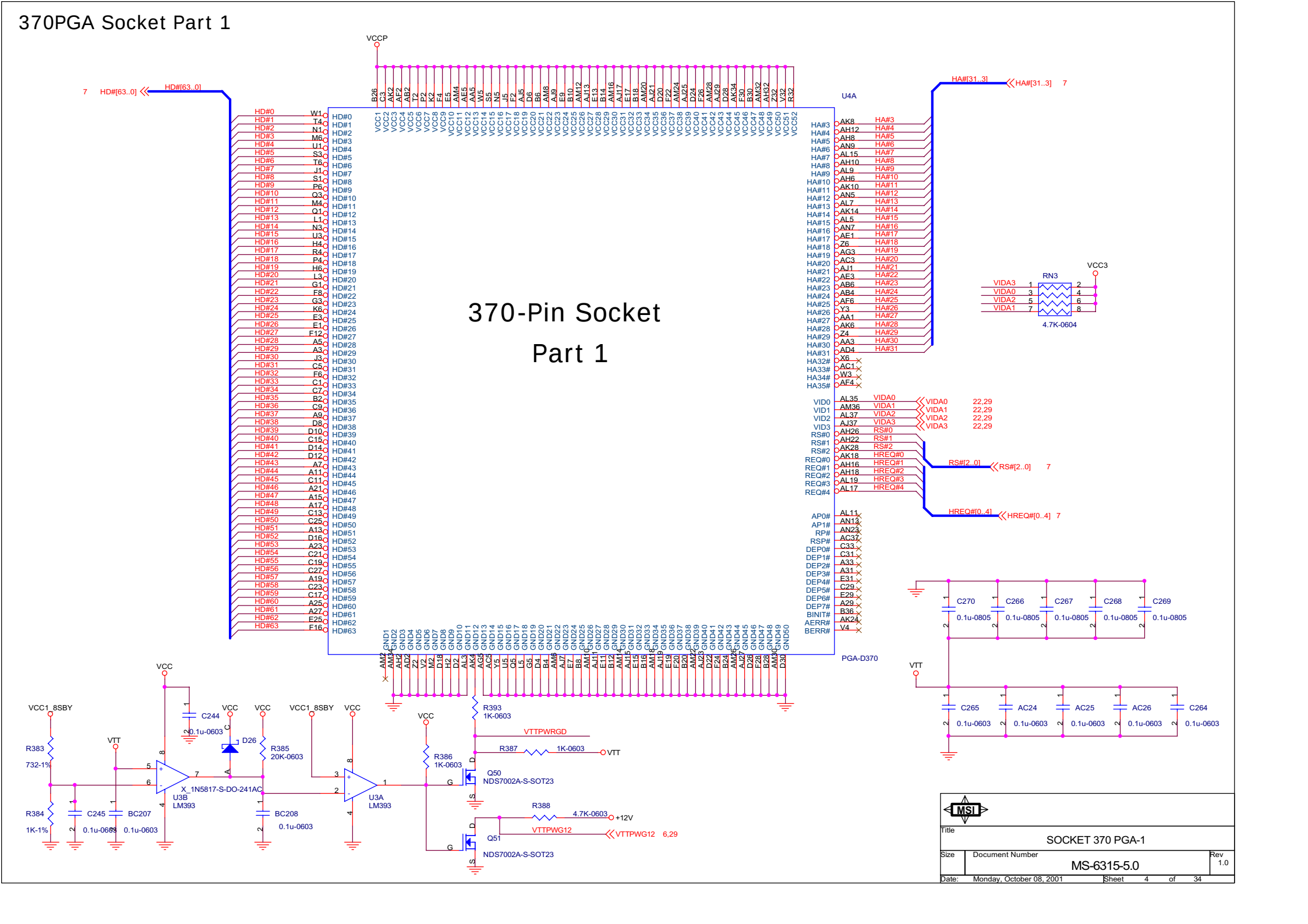

370PGA Socket Part 2

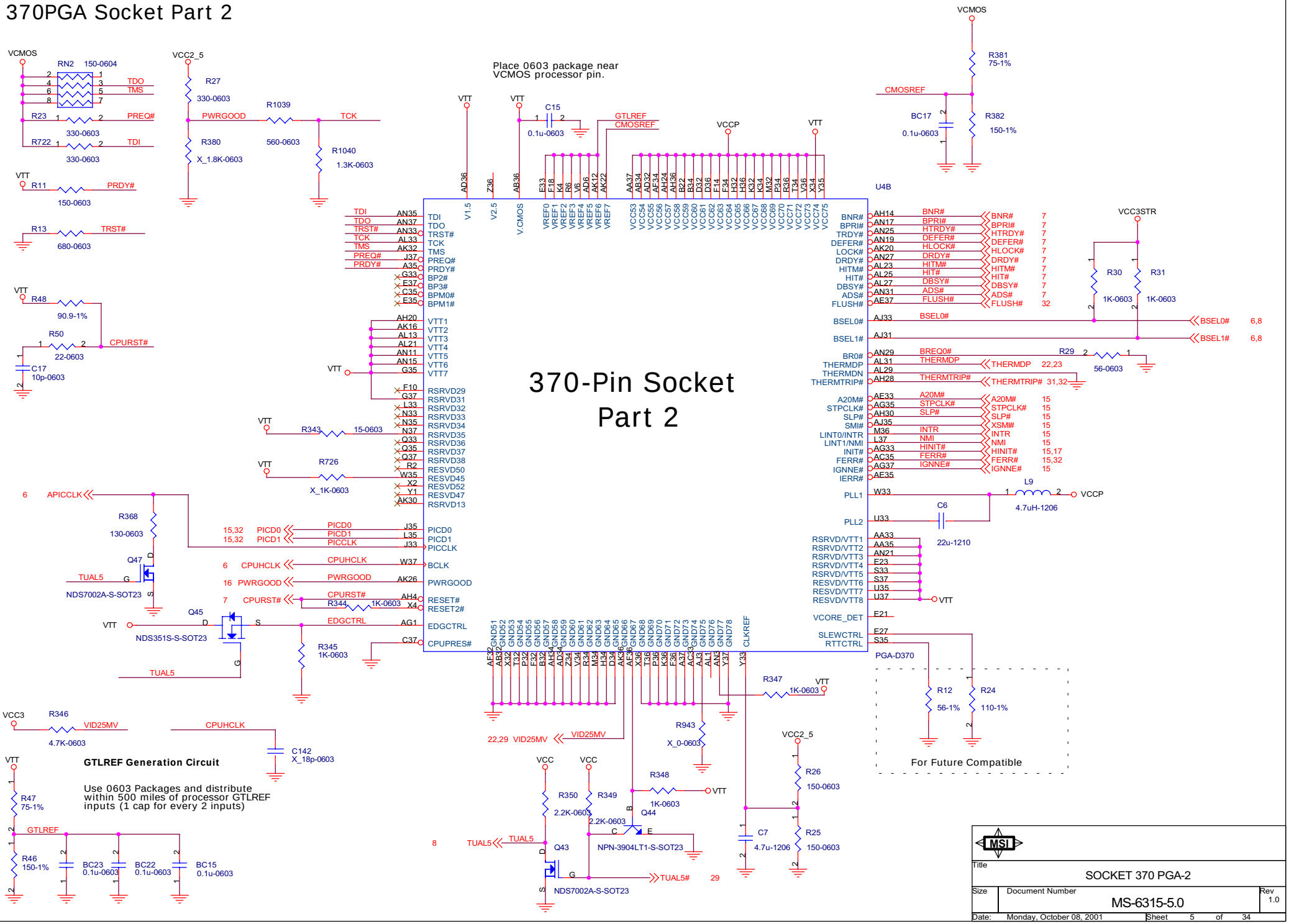

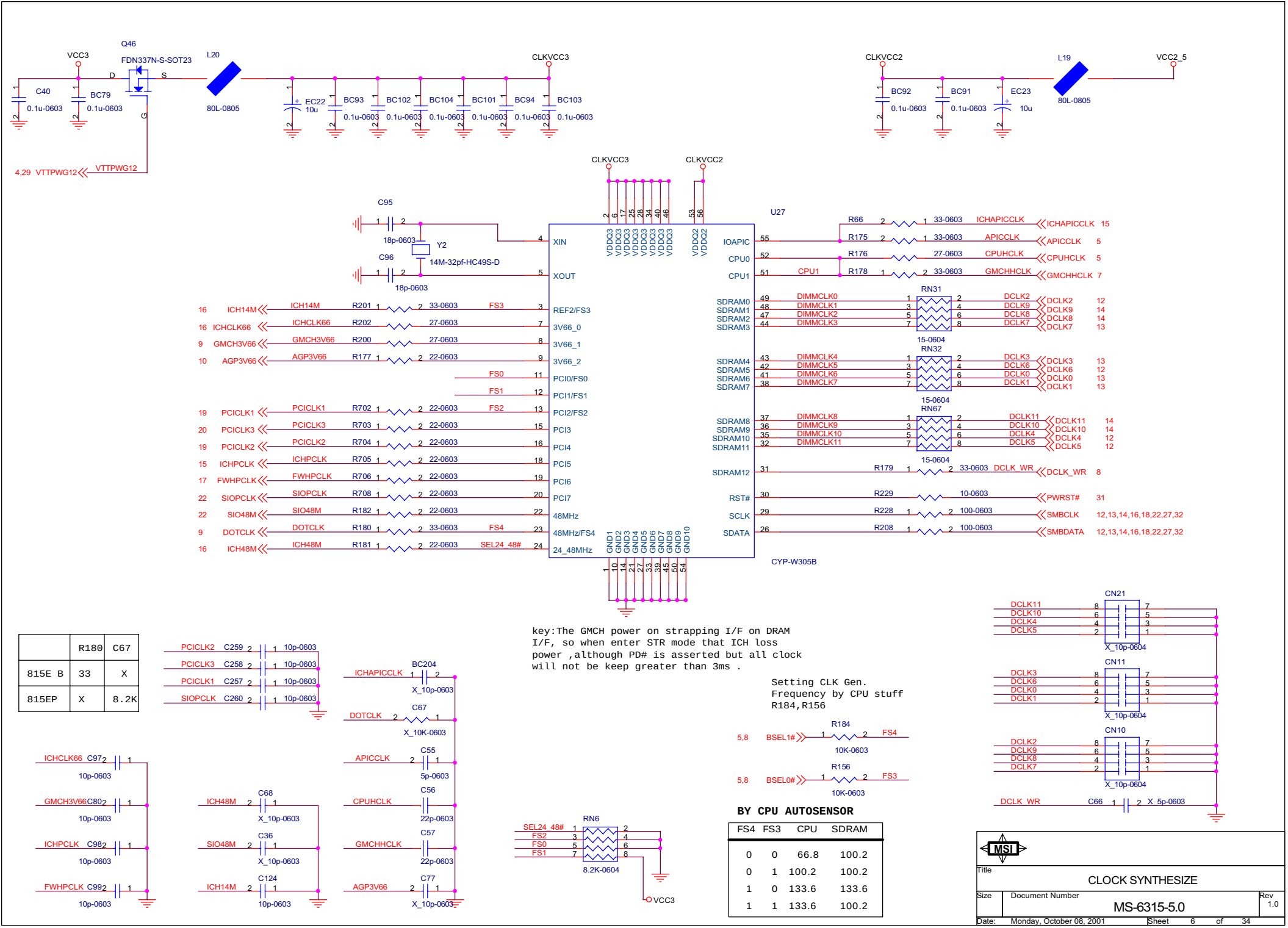

key:The GMCH power on strapping I/F on DRAM I/F, so when enter STR mode that ICH loss power ,although PD# is asserted but all clock will not be keep greater than 3ms .

Setting CLK Gen. Frequency by CPU stuff R184,R156

	R180	C67
815E B	33	X
815EP	X	8.2K

BY CPU AUTOSENSOR

FS4	FS3	CPU	SDRAM
0	0	66.8	100.2
0	1	100.2	100.2
1	0	133.6	133.6
1	1	133.6	100.2

MSI	Title	CLOCK SYNTHESIZE
	Size	Document Number MS-6315-5.0 Rev 1.0
	Date: Monday, October 08, 2001	Sheet 6 of 34

82815, PART 1 : HOST INTERFACE

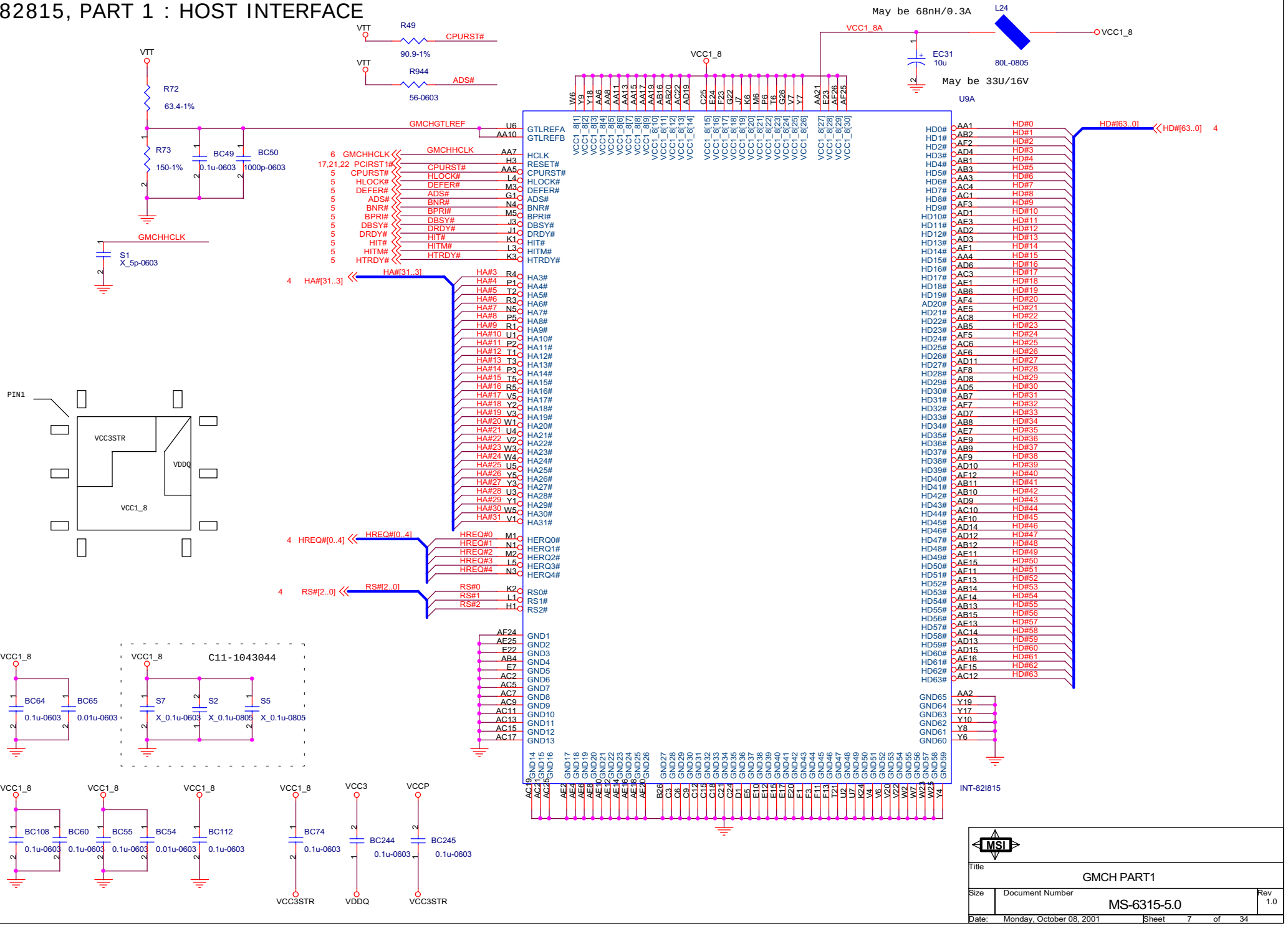

Title	GMCH PART1	
Size	Document Number MS-6315-5.0	Rev 1.0
Date: Monday, October 08, 2001	Sheet 7 of 34	

GMCH, PART 2 : SYSTEM MEMORY

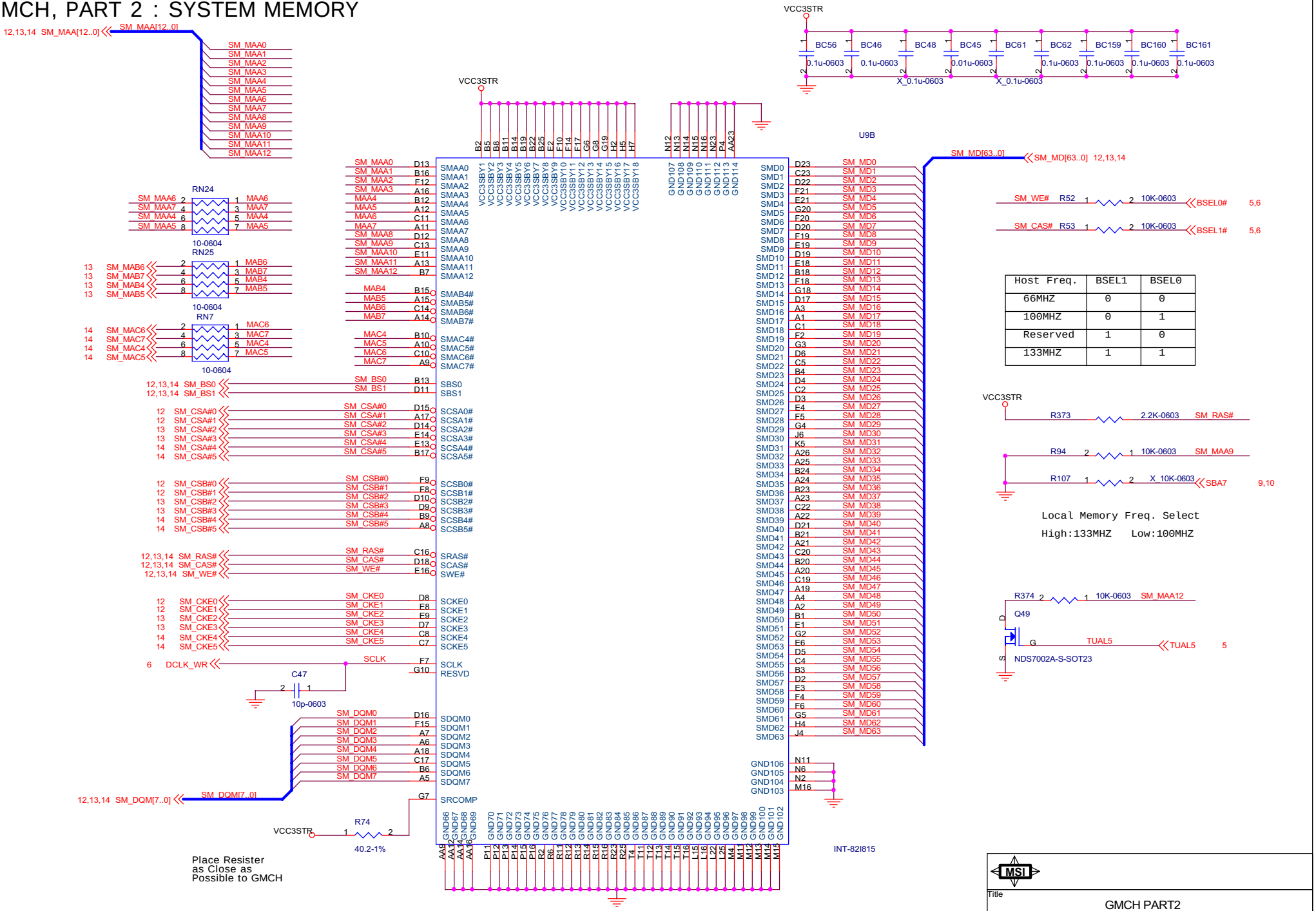

Title	GMCH PART2		
Size	Document Number	MS-6315-5.0	Rev 1.0
Date:	Monday, October 08, 2001	Sheet 8 of 34	

GMCH PART 3 : AGP & VIDEO Interface & HUB link

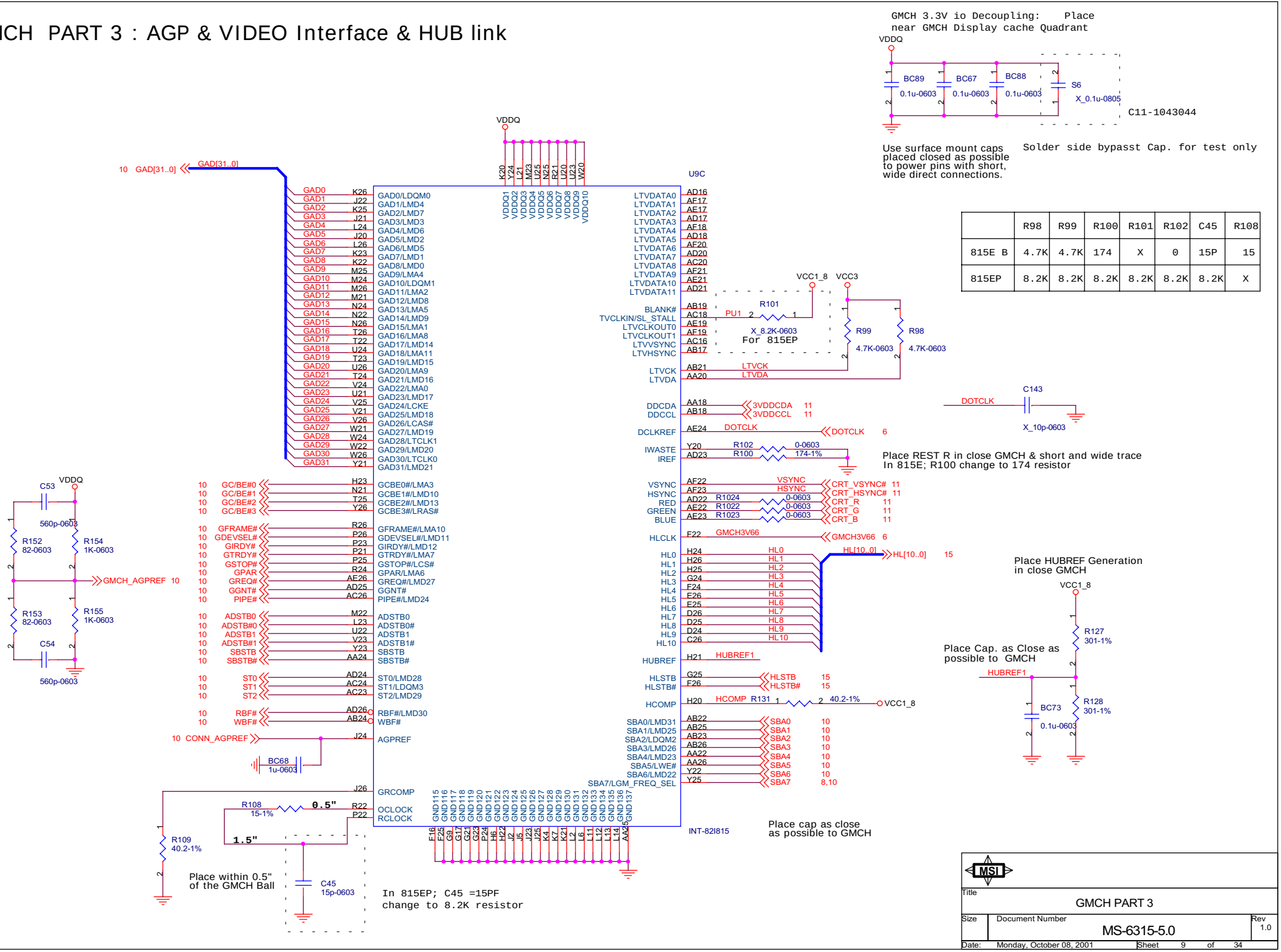

	R98	R99	R100	R101	R102	C45	R108
815E B	4.7K	4.7K	174	X	0	15P	15
815EP	8.2K	8.2K	8.2K	8.2K	8.2K	8.2K	X

Title	GMCH PART 3	
Size	Document Number MS-6315-5.0	Rev 1.0
Date: Monday, October 08, 2001	Sheet 9 of 34	

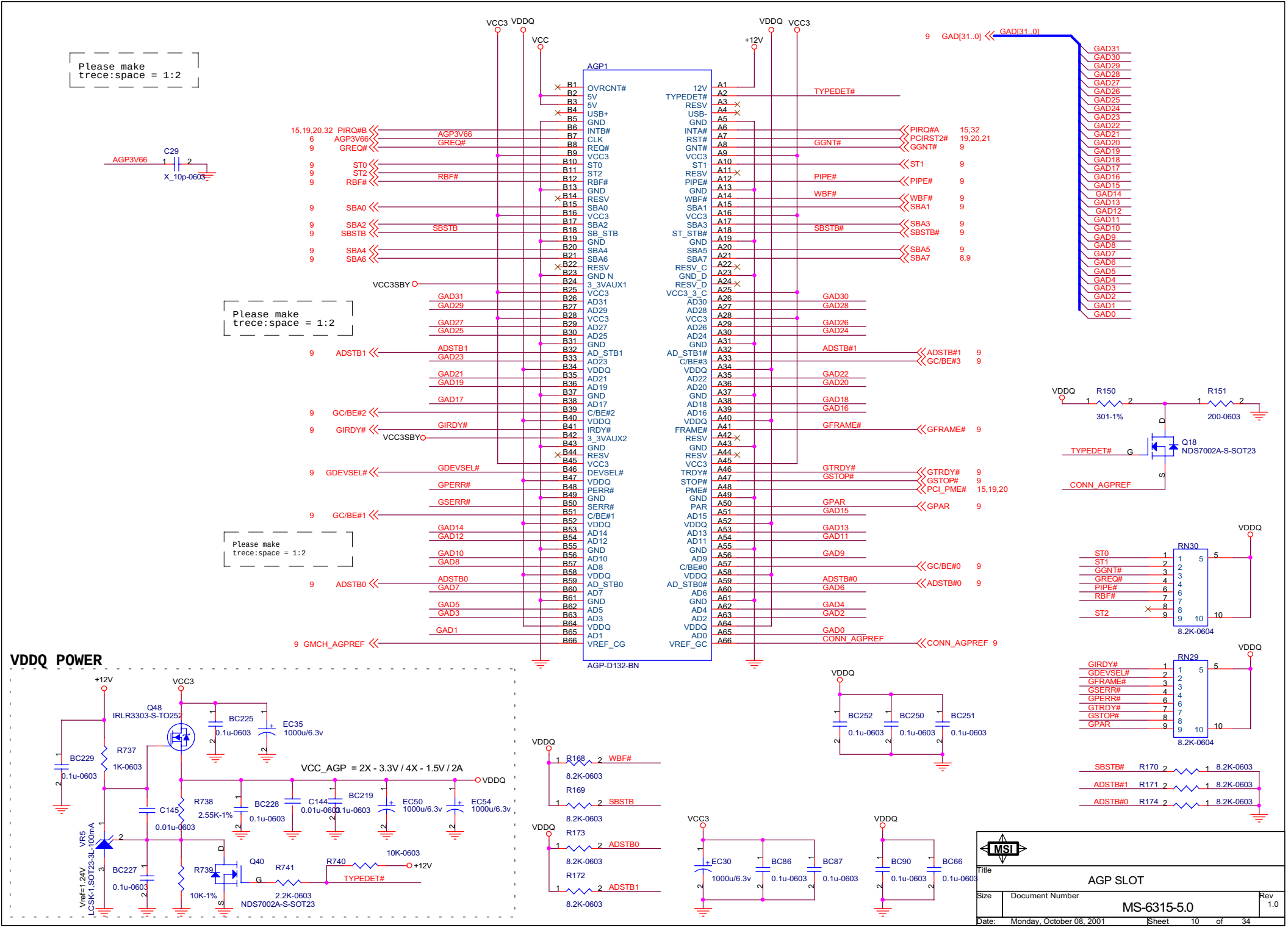
Please make trece:space = 1:2
Please make trece:space = 1:2
Please make trece:space = 1:2
AGP1
AGP-D132-BN
VDDQ POWER
VCC_AGP = 2X - 3.3V / 4X - 1.5V / 2A
AGP-D132-BN
Title
AGP SLOT
Size
Document Number
MS-6315-5.0
Rev
1.0
Date: Monday, October 08, 2001
Sheet 10 of 34

Video Connector

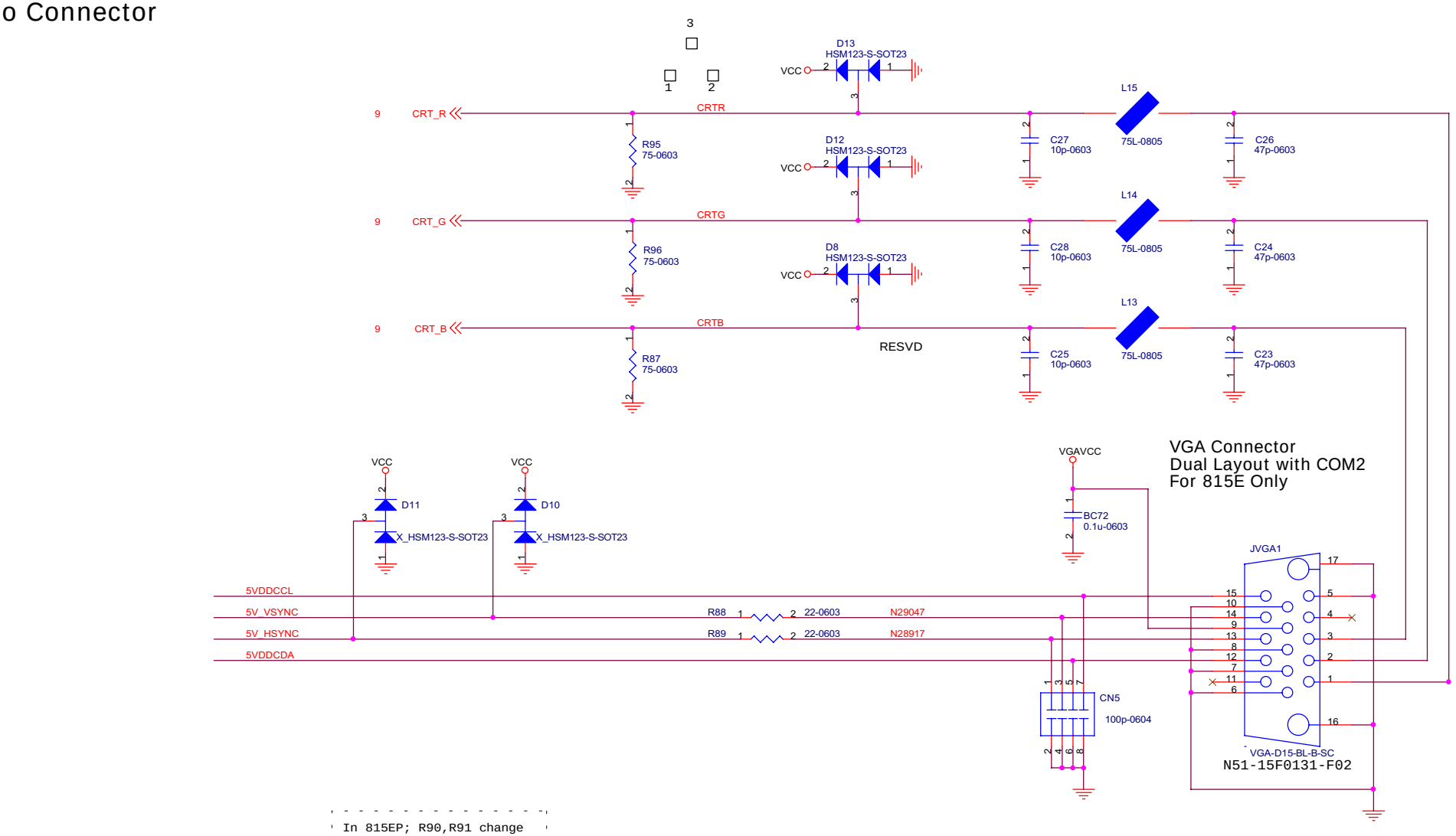

Title	VGA CONNECTOR	
Size	Document Number MS-6315-5.0	Rev 1.0
Date: Monday, October 08, 2001	Sheet 11 of 34	

DIMM1

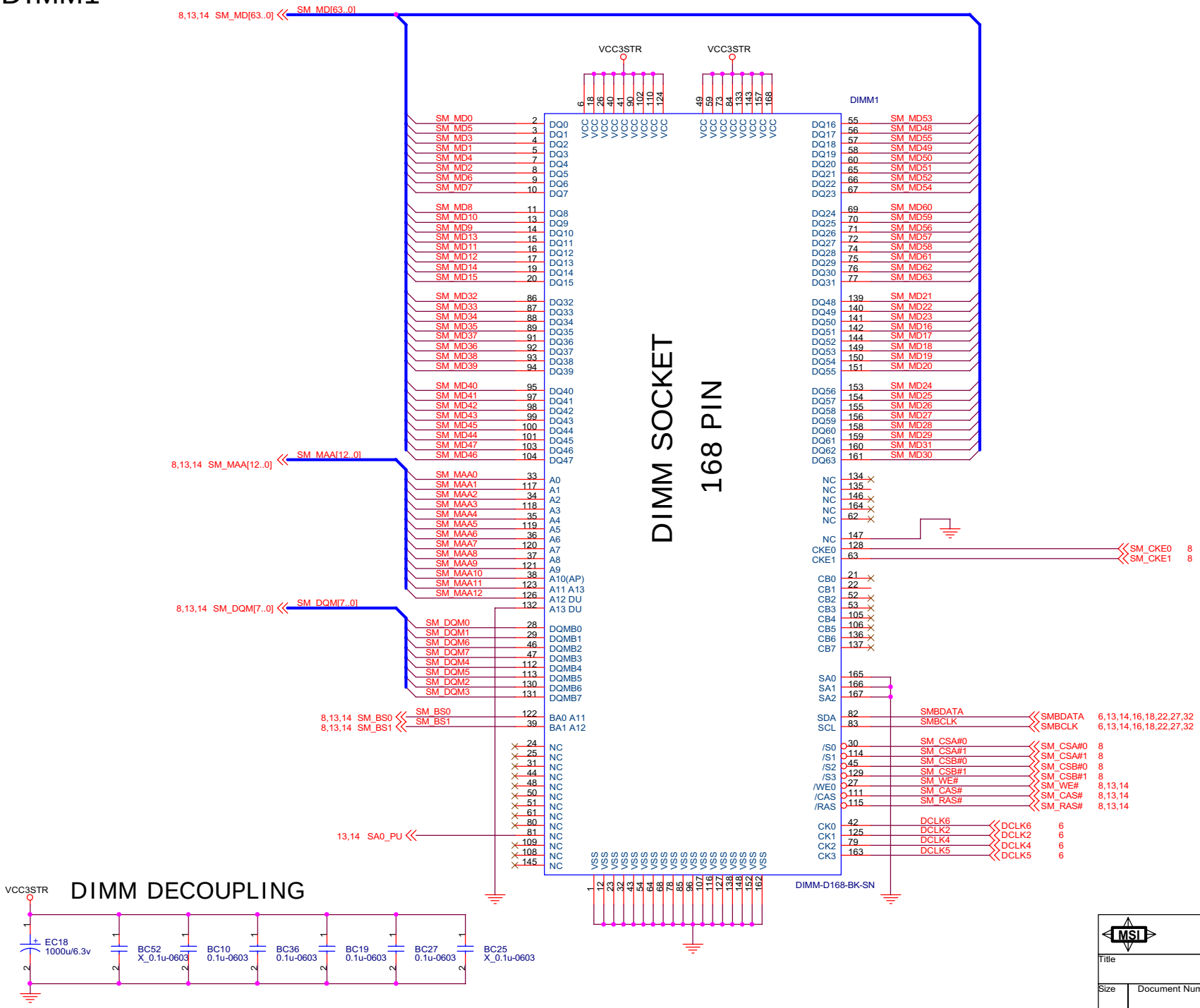

DIMM DECOUPLING

Title	DIMM1	
Size	Document Number MS-6315-5.0	Rev 1.0
Date: Monday, October 08, 2001	Sheet 12 of 34	

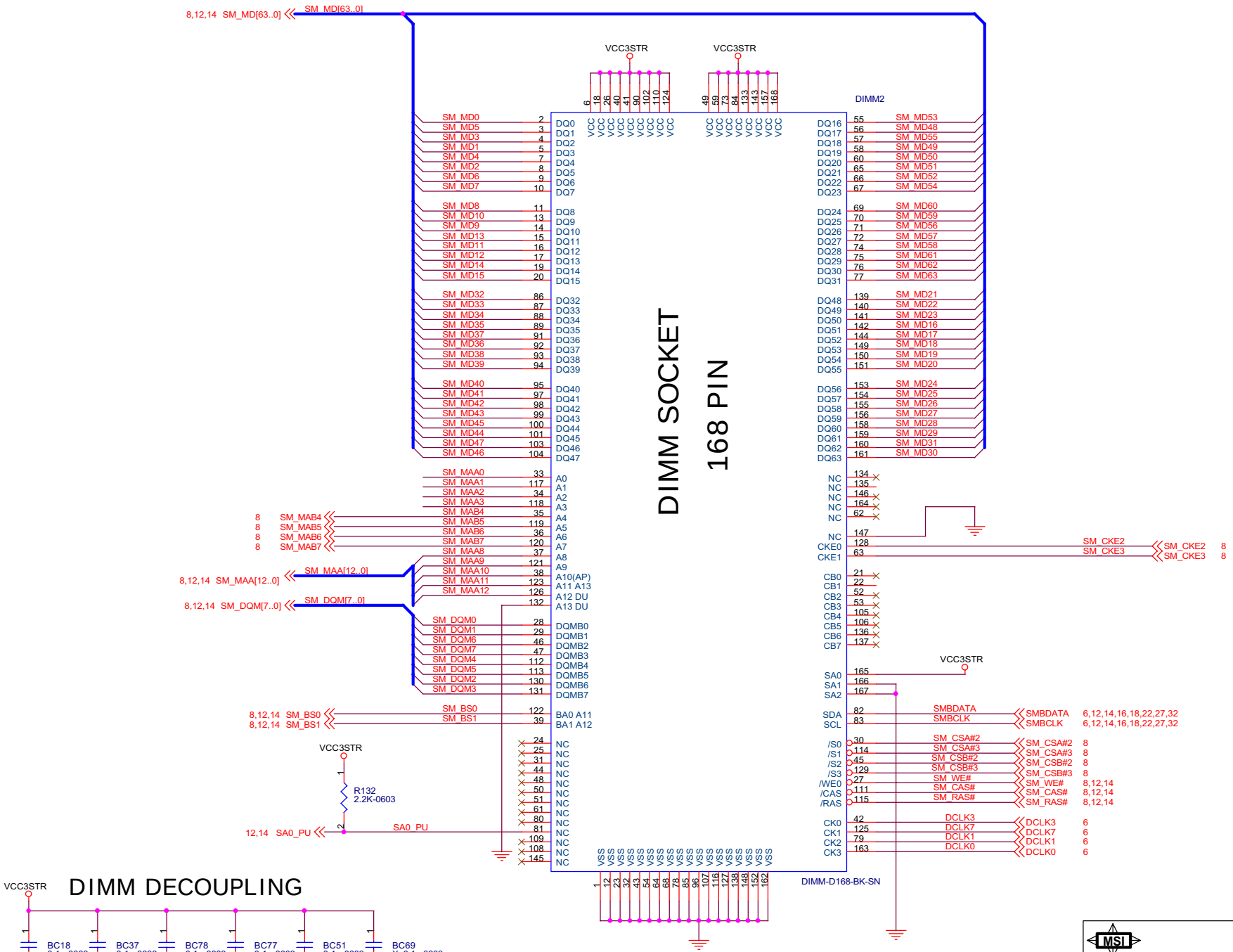

Title	DIMM2	
Size	Document Number MS-6315-5.0	Rev 1.0
Date: Monday, October 08, 2001	Sheet 13 of 34	

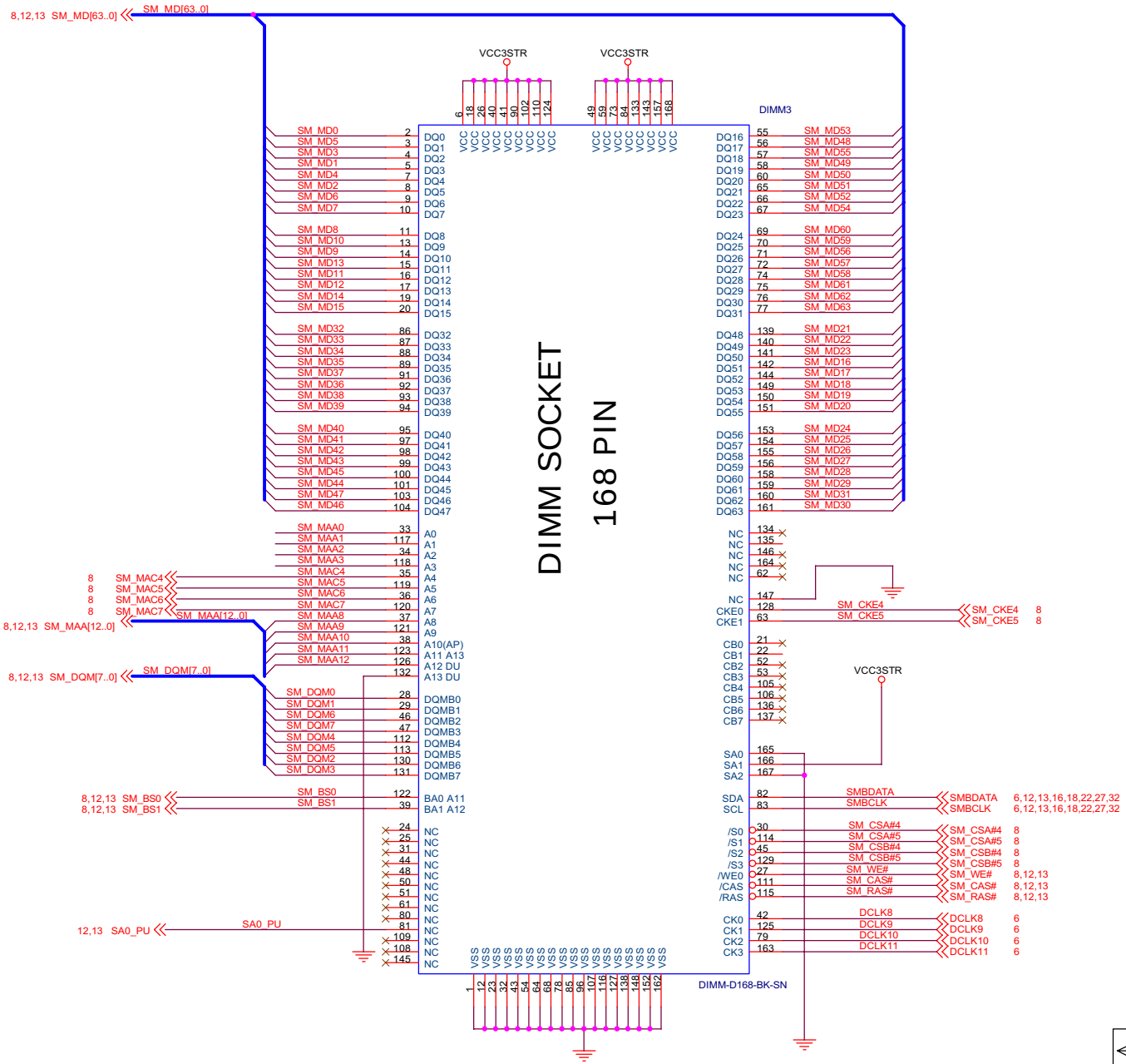

MSI		
Title	DIMM3	
Size	Document Number MS-6315-5.0	Rev 1.0
Date: Monday, October 08, 2001	Sheet 14 of 34	

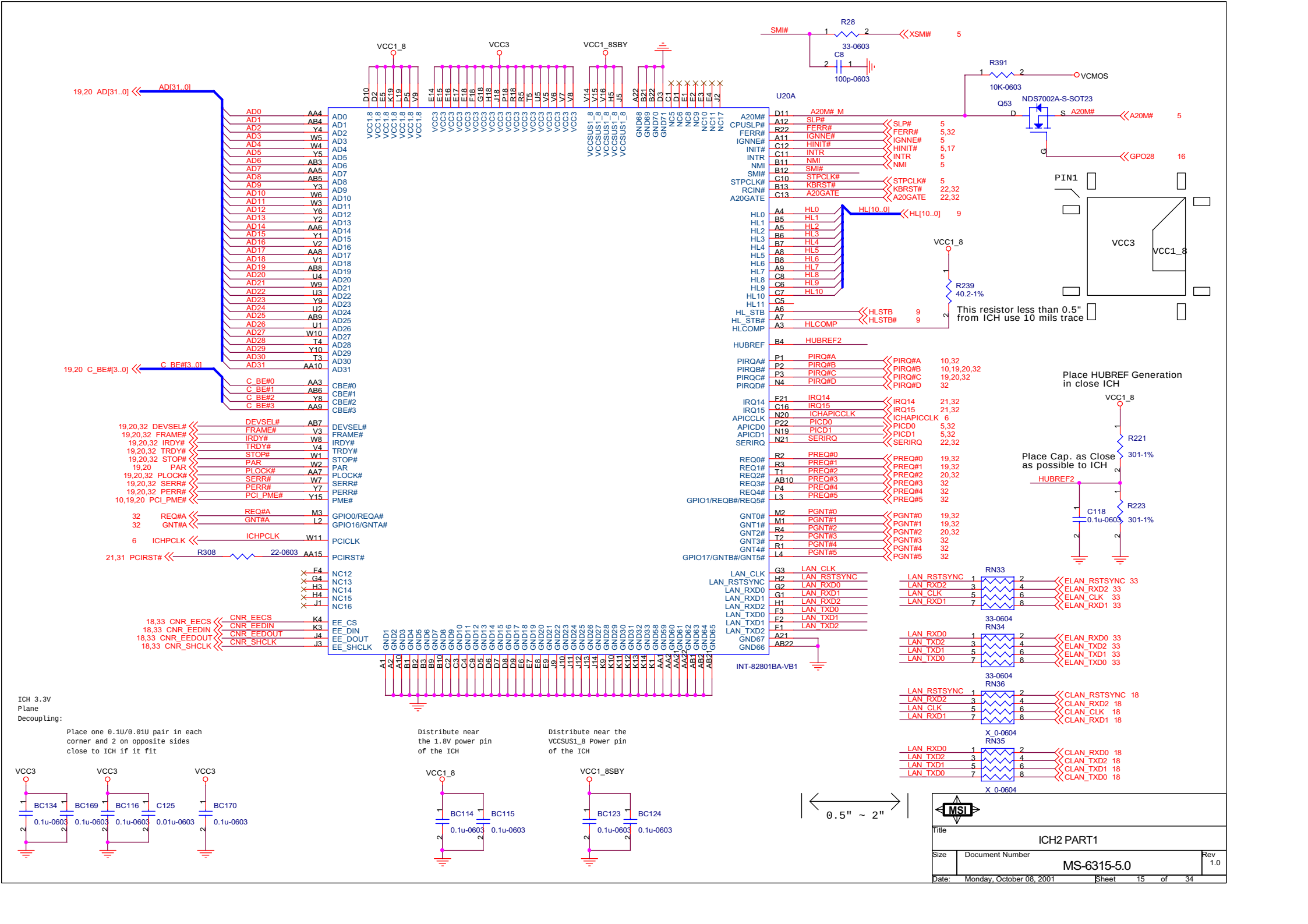
U20A
INT-82801BA-VB1
R28
33-0603
C8
100p-0603
R391
10K-0603
VCMOS
Q53
NDS7002A-S-SOT23
R239
40.2-1%
This resistor less than 0.5" from ICH use 10 mils trace
PIN1
VCC3
VCC1_8
Place HUBREF Generation in close ICH
Place Cap. as Close as possible to ICH
R221
301-1%
R223
301-1%
C118
0.1u-0603
HUBREF2
RN33
RN34
RN36
RN35
33-0604
X_0-0604
ICH 3.3V Plane Decoupling:
Place one 0.1U/0.01U pair in each corner and 2 on opposite sides close to ICH if it fit
Distribute near the 1.8V power pin of the ICH
Distribute near the VCCSUS1_8 Power pin of the ICH
BC134
BC169
BC116
C125
BC170
BC114
BC115
BC123
BC124
0.5" ~ 2"
MSI
Title
ICH2 PART1
Size
Document Number
MS-6315-5.0
Rev
1.0
Date: Monday, October 08, 2001
Sheet 15 of 34

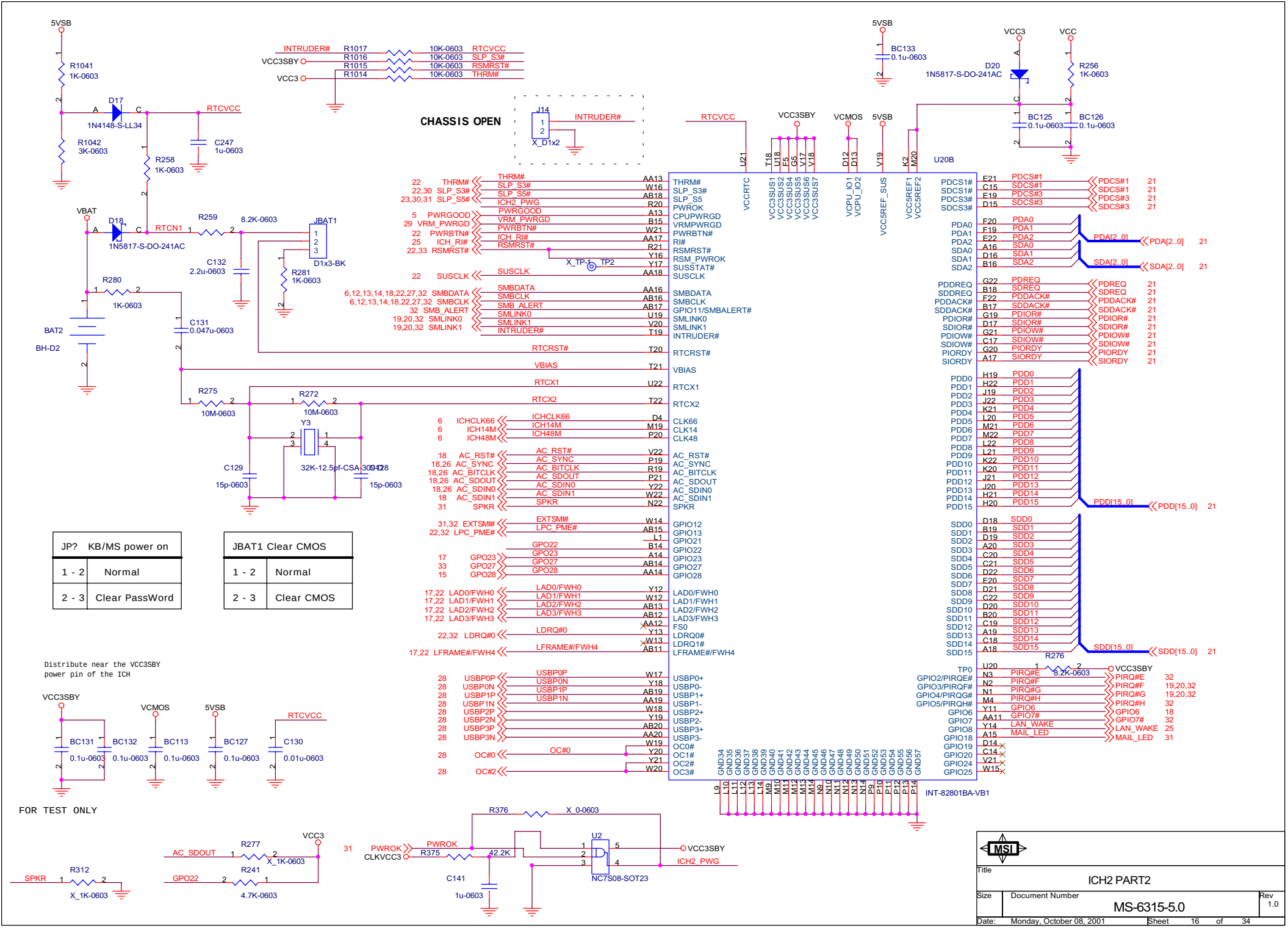
5VSB
R1041 1K-0603
R1042 3K-0603
D17 1N4148-S-LL34
RTCVCC
C247 1u-0603
R258 1K-0603
VBAT
D18 1N5817-S-DO-241AC
RTCN1
R259 8.2K-0603
JBAT1
D1x3-BK
R281 1K-0603
C132 2.2u-0603
R280 1K
C131 0.047u-0603
BAT2
BH-D2
R275 10M-0603
R272 10M-0603
Y3 32K-12.5pf-CSA-3094128
C129 15p-0603
15p-0603
INTRUDER# R1017 10K-0603 RTCVCC
VCC3SBY R1016 10K-0603 SLP_S3#
R1015 10K-0603 RSMRST#
VCC3 R1014 10K-0603 THRM#
CHASSIS OPEN
J14 INTRUDER# X_D1x2
5VSB BC133 0.1u-0603
VCC3 VCC
D20 1N5817-S-DO-241AC
R256 1K-0603
BC125 0.1u-0603
BC126 0.1u-0603
RTCVCC VCC3SBY VCMOS 5VSB
U20B
THRM# SLP_S3# SLP_S5# PWROK CPUPWRGD VRMPWRGD PWRBTN# RI# RSMRST# RSM_PWROK SUSSTAT# SUSCLK
SMBDATA SMBCLK GPIO11/SMBALERT# SMLINK0 SMLINK1 INTRUDER#
RTCRST# VBIAS RTCX1 RTCX2
CLK66 CLK14 CLK48
AC_RST# AC_SYNC AC_BITCLK AC_SDOUT AC_SDIN0 AC_SDIN1 SPKR
GPIO12 GPIO13 GPIO21 GPIO22 GPIO23 GPIO27 GPIO28
LAD0/FWH0 LAD1/FWH1 LAD2/FWH2 LAD3/FWH3 FS0 LDRQ0# LDRQ1# LFRAME#/FWH4
USBP0+ USBP0- USBP1+ USBP1- USBP2+ USBP2- USBP3+ USBP3- OC0# OC1# OC2# OC3#
VCCRTC VCC3SUS1 VCC3SUS2 VCC3SUS4 VCC3SUS5 VCC3SUS6 VCC3SUS7 VCPU_IO1 VCPU_IO2 VCC5REF_SUS VCC5REF1 VCC5REF2
PDCS1# SDCS1# PDCS3# SDCS3#
PDA0 PDA1 PDA2 SDA0 SDA1 SDA2
PDREQ SDREQ PDDACK# SDDACK# PDIOR# SDIOR# PDIOW# SDIOW# PIORDY SIORDY
PDD0 PDD1 PDD2 PDD3 PDD4 PDD5 PDD6 PDD7 PDD8 PDD9 PDD10 PDD11 PDD12 PDD13 PDD14 PDD15
SDD0 SDD1 SDD2 SDD3 SDD4 SDD5 SDD6 SDD7 SDD8 SDD9 SDD10 SDD11 SDD12 SDD13 SDD14 SDD15
R276 8.2K-0603
VCC3SBY
TP0 GPIO2/PIRQE# GPIO3/PIRQF# GPIO4/PIRQG# GPIO5/PIRQH# GPIO6 GPIO7 GPIO8 GPIO18 GPIO19 GPIO20 GPIO24 GPIO25
PIRQ#E PIRQ#F PIRQ#G PIRQ#H GPIO6 GPIO7# LAN_WAKE MAIL_LED
GND34 GND35 GND36 GND37 GND38 GND39 GND40 GND41 GND42 GND43 GND44 GND45 GND46 GND47 GND48 GND49 GND50 GND51 GND52 GND53 GND54 GND55 GND56 GND57
INT-82801BA-VB1
JP? KB/MS power on
1 - 2 Normal
2 - 3 Clear PassWord
JBAT1 Clear CMOS
1 - 2 Normal
2 - 3 Clear CMOS
Distribute near the VCC3SBY power pin of the ICH
VCC3SBY VCMOS 5VSB RTCVCC
BC131 0.1u-0603
BC132 0.1u-0603
BC113 0.1u-0603
BC127 0.1u-0603
C130 0.01u-0603
FOR TEST ONLY
R312 X_1K-0603
SPKR
R277 X_1K-0603
R241 4.7K-0603
AC_SDOUT
GPO22
VCC3
R376 X_0-0603
PWROK
CLKVCC3
R375 42.2K
C141 1u-0603
U2 NC7S08-SOT23
VCC3SBY
ICH2_PWG
MSI
Title
ICH2 PART2
Size
Document Number
MS-6315-5.0
Rev 1.0
Date: Monday, October 08, 2001
Sheet 16 of 34

Firware Hub (FWH)

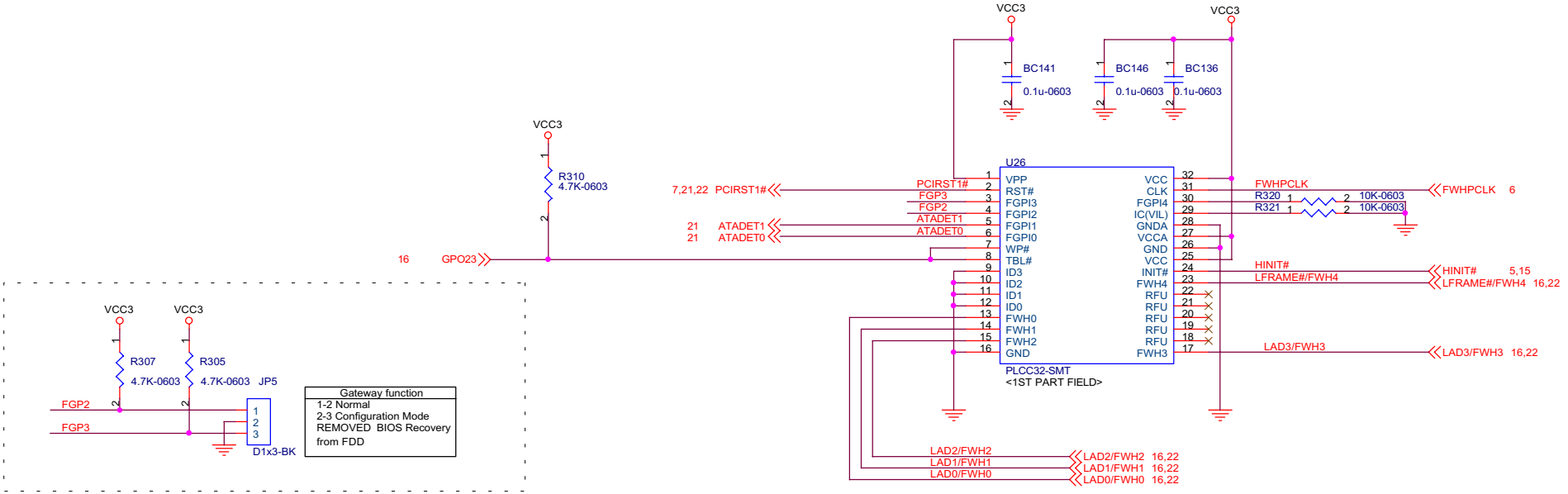

OPTION

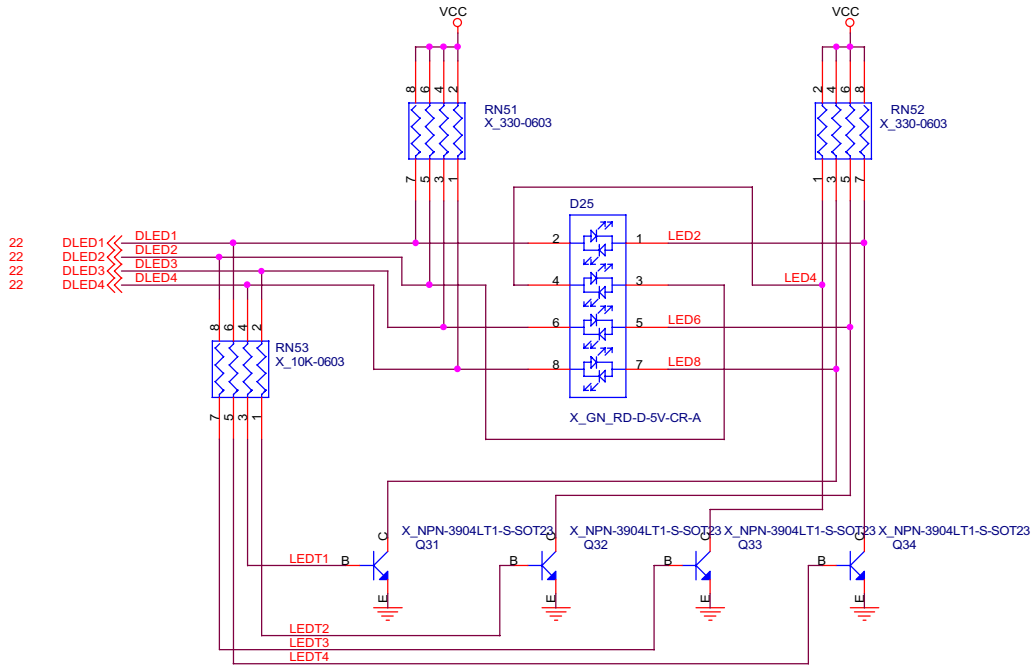

Title	FIWARE HUB	
Size	Document Number MS-6315-5.0	Rev 1.0
Date: Monday, October 08, 2001	Sheet 17 of 34	

CNR RISER

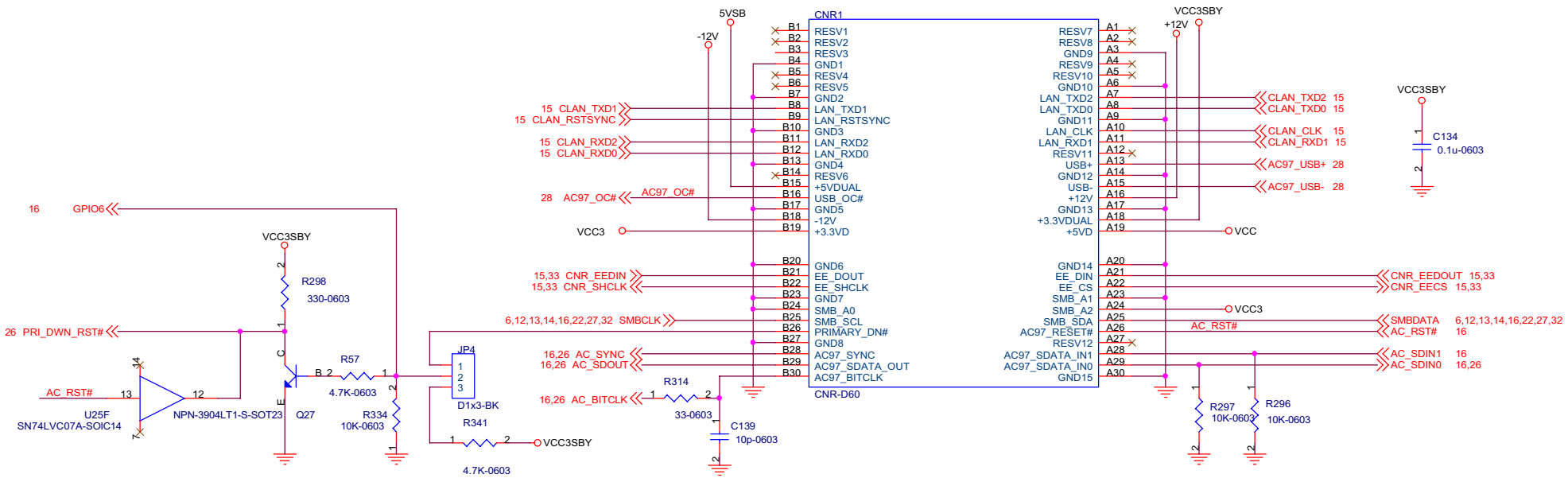

MSI		
Title	CNR	
Size	Document Number MS-6315-5.0	Rev 1.0
Date: Monday, October 08, 2001	Sheet 18 of 34	

PCI Connectors

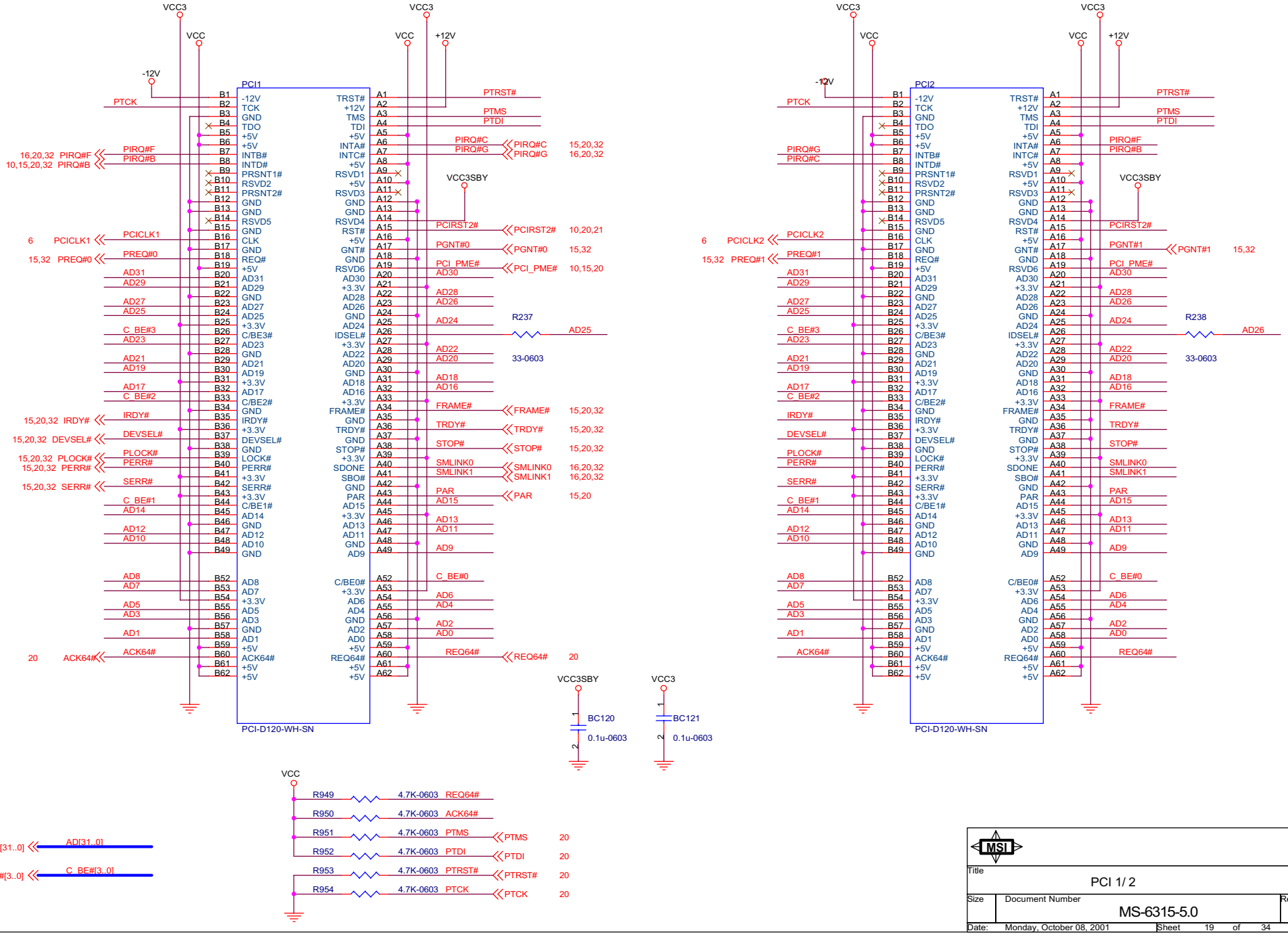

Title	PCI 1/2	
Size	Document Number MS-6315-5.0	Rev 1.0
Date: Monday, October 08, 2001	Sheet 19 of 34	

PCI Slot

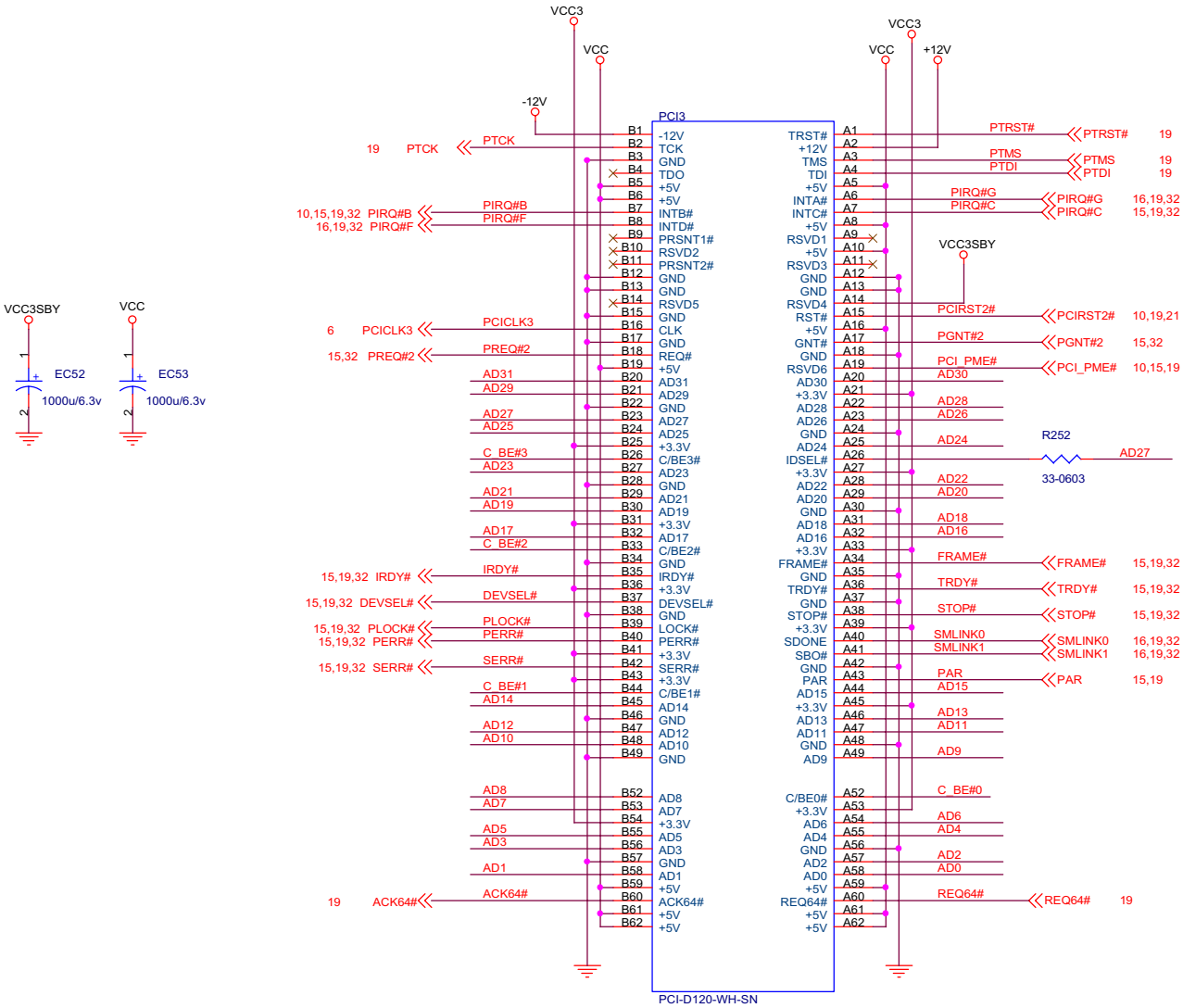

15,19 AD[31..0] AD[31..0]

15,19 C_BE#[3..0] C_BE#[3..0]

MSI		
Title	PCI3	
Size	Document Number MS-6315-5.0	Rev 1.0
Date: Monday, October 08, 2001	Sheet 20 of 34	

ATA100 IDE CONNECTORS

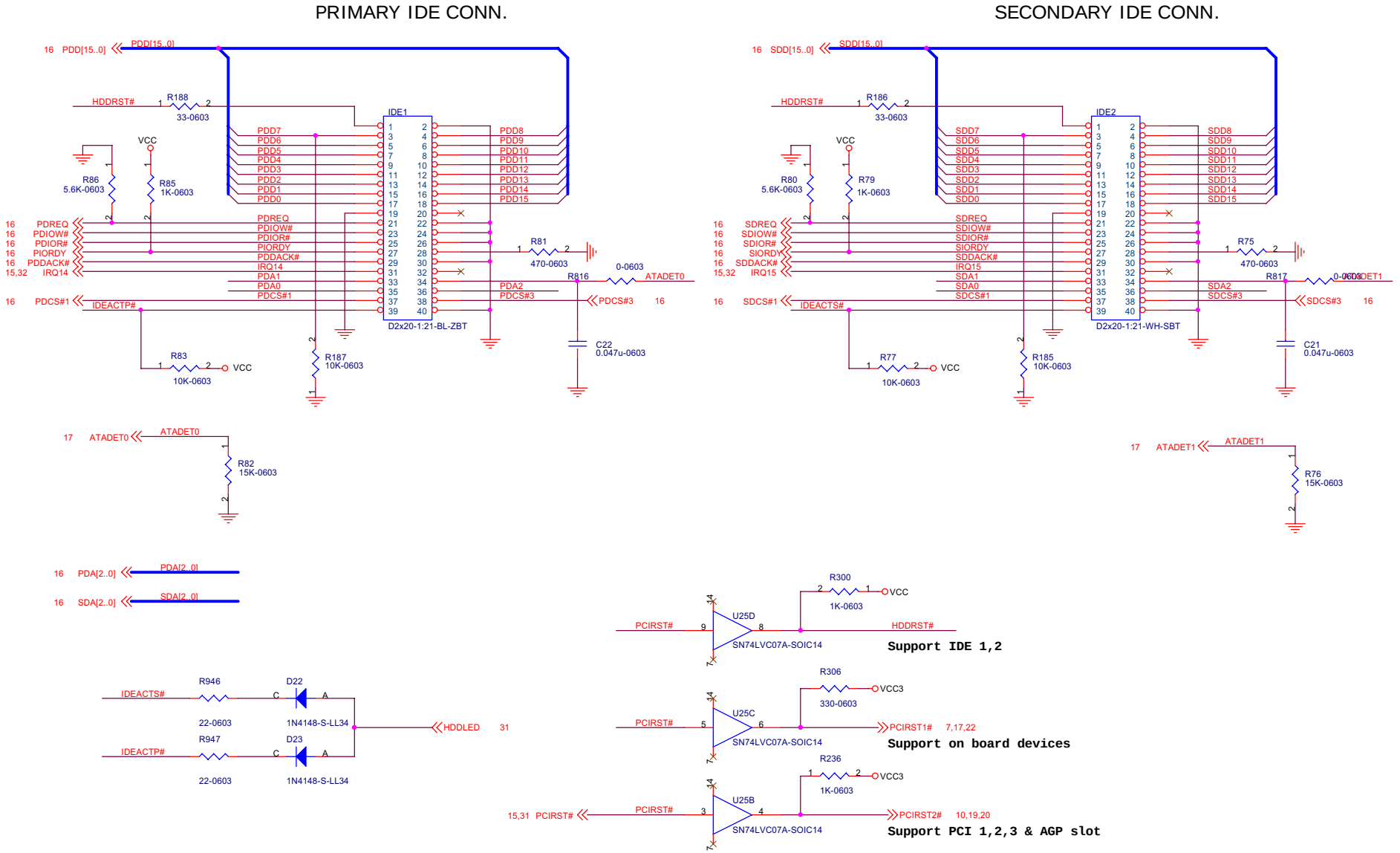

Title	ATA 100 IDE CONNECTOR	
Size	Document Number MS-6315-5.0	Rev 1.0
Date: Monday, October 08, 2001	Sheet 21 of 34	

Super I/O

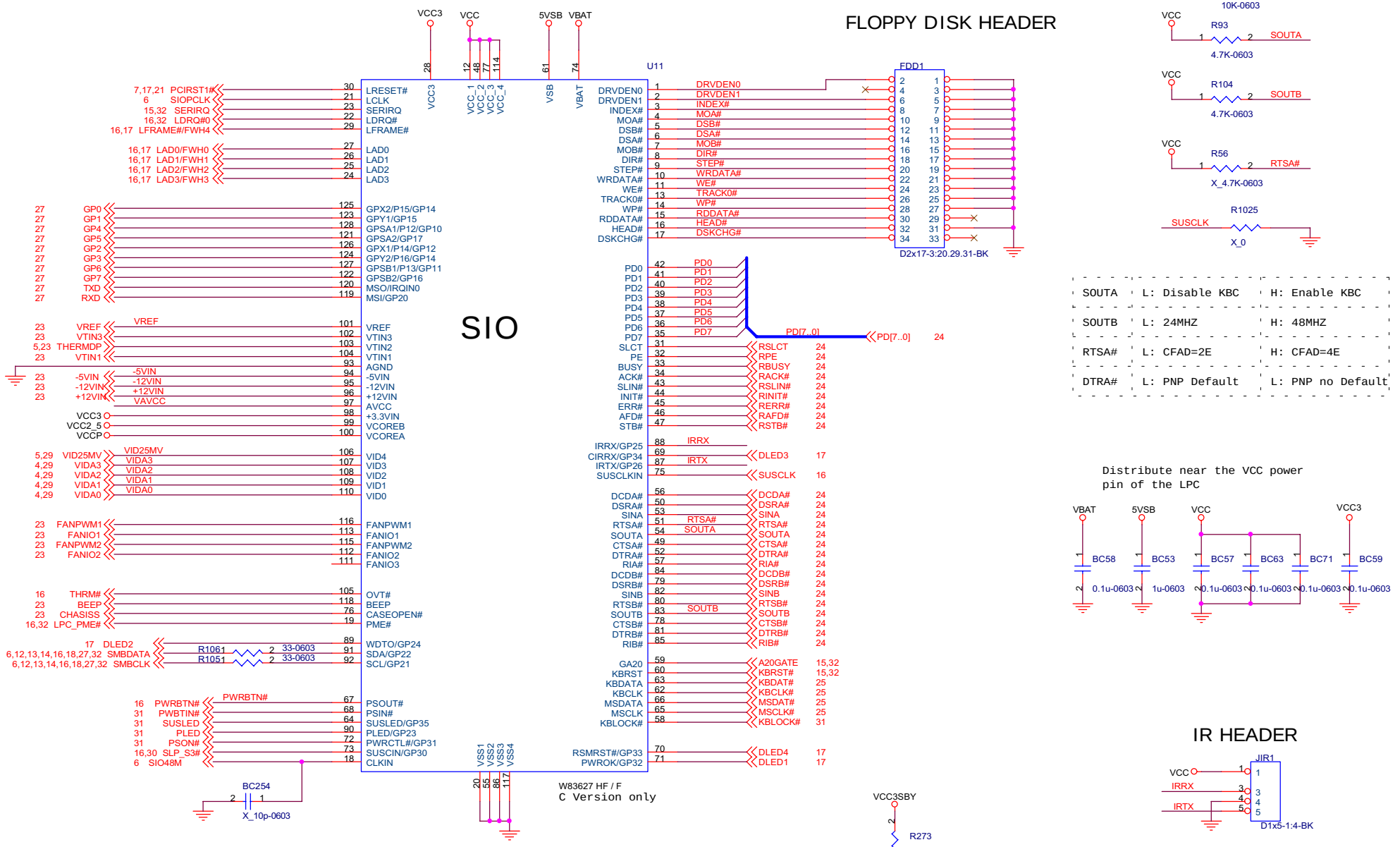

Title	LPC I/O
Size	Document Number: MS-6315-5.0
Rev	1.0
Date:	Monday, October 08, 2001
Sheet	22 of 34

Hardware Monitor

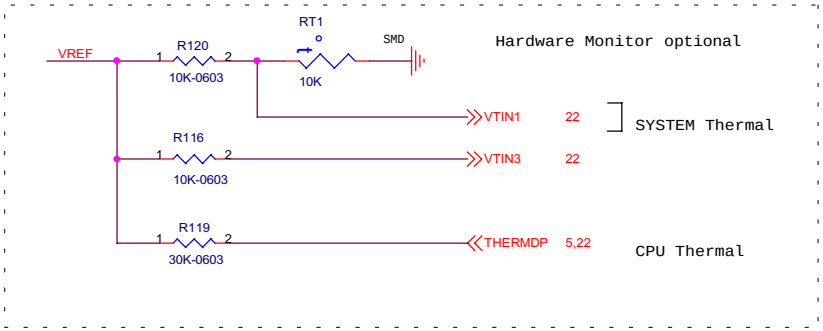

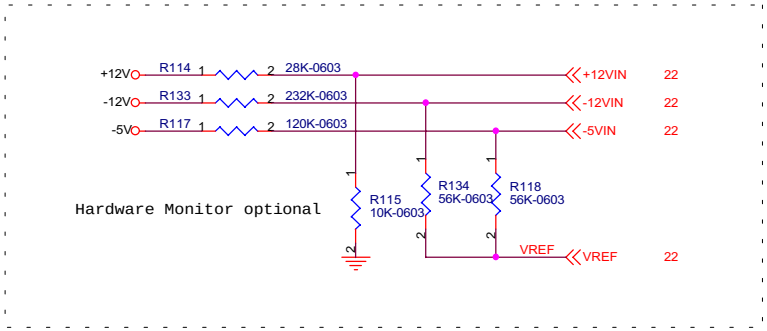

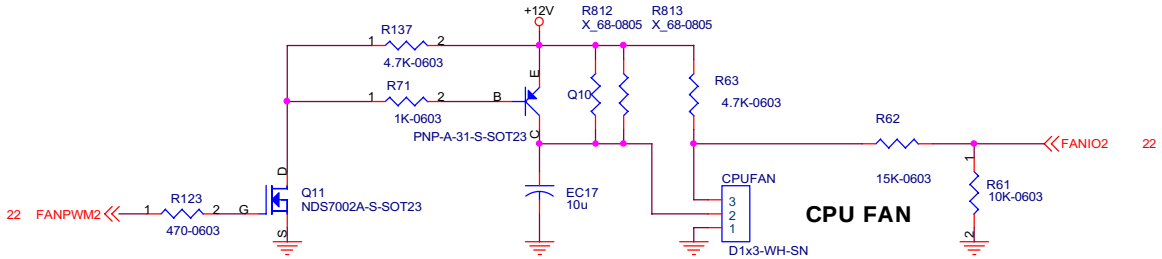

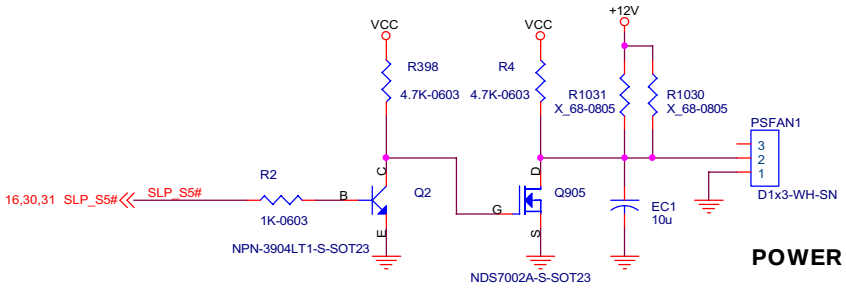

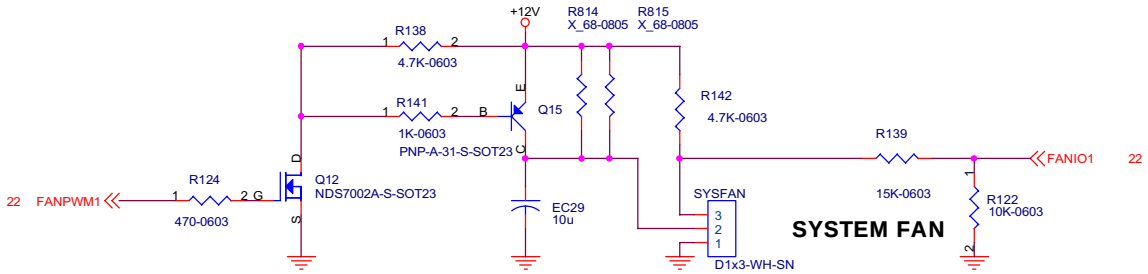

Chassis Intrusion Header

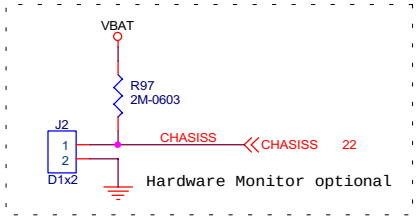

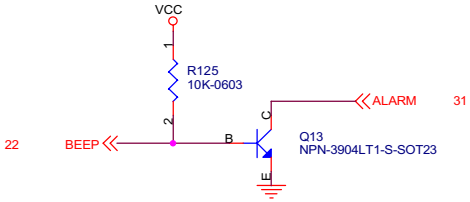

MSI

Title	FAN / H/W MONITOR	
Size	Document Number MS-6315-5.0	Rev 1.0
Date: Monday, October 08, 2001	Sheet 23 of 34	

Parallel Port / COM1port & COM2 Header

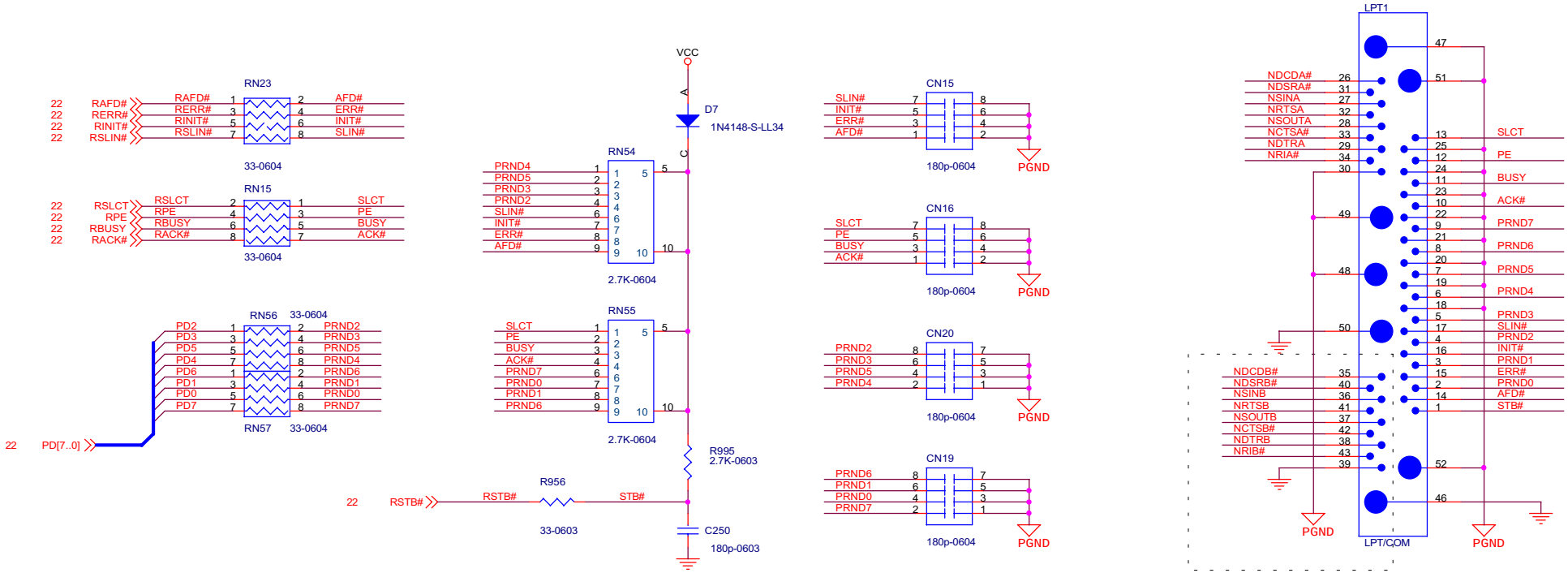

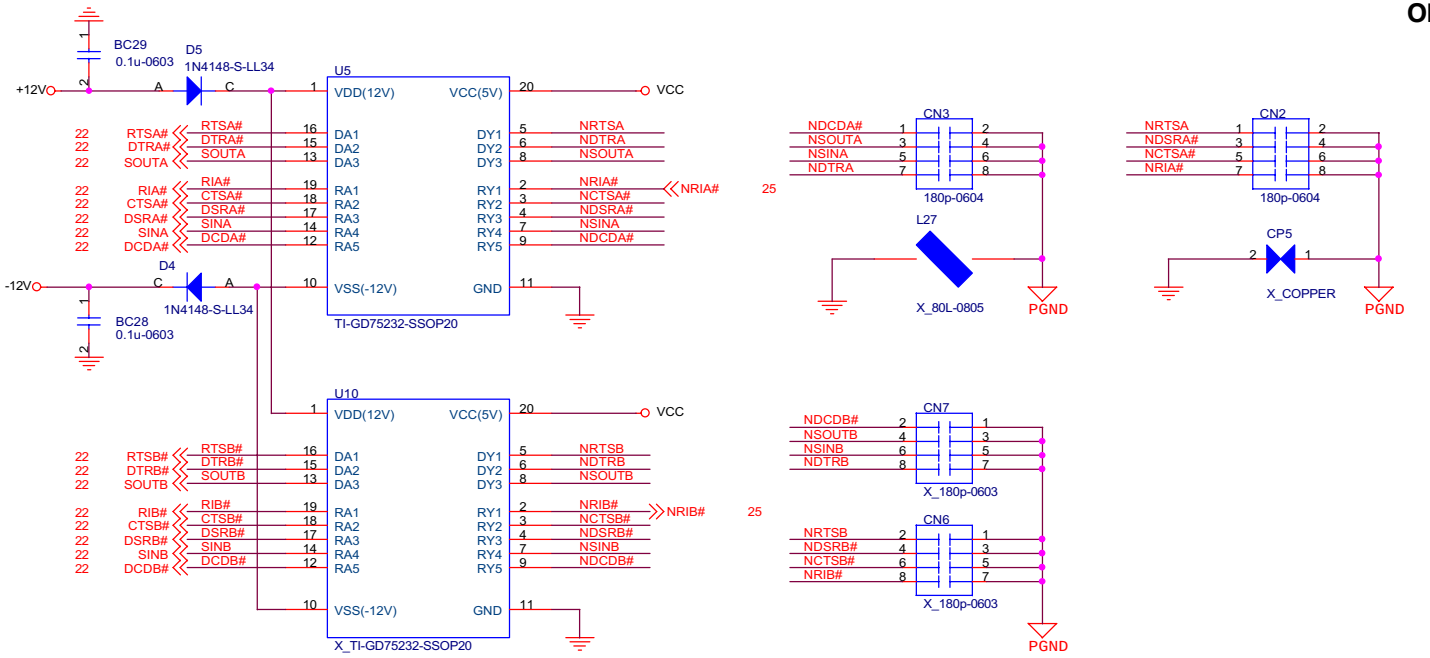

MSI			
Title	COM / LPT PORT		
Size	Document Number	MS-6315-5.0	Rev 1.0
Date: Monday, October 08, 2001	Sheet 24 of 34		

KEYBOARD/MOUSE PORTS

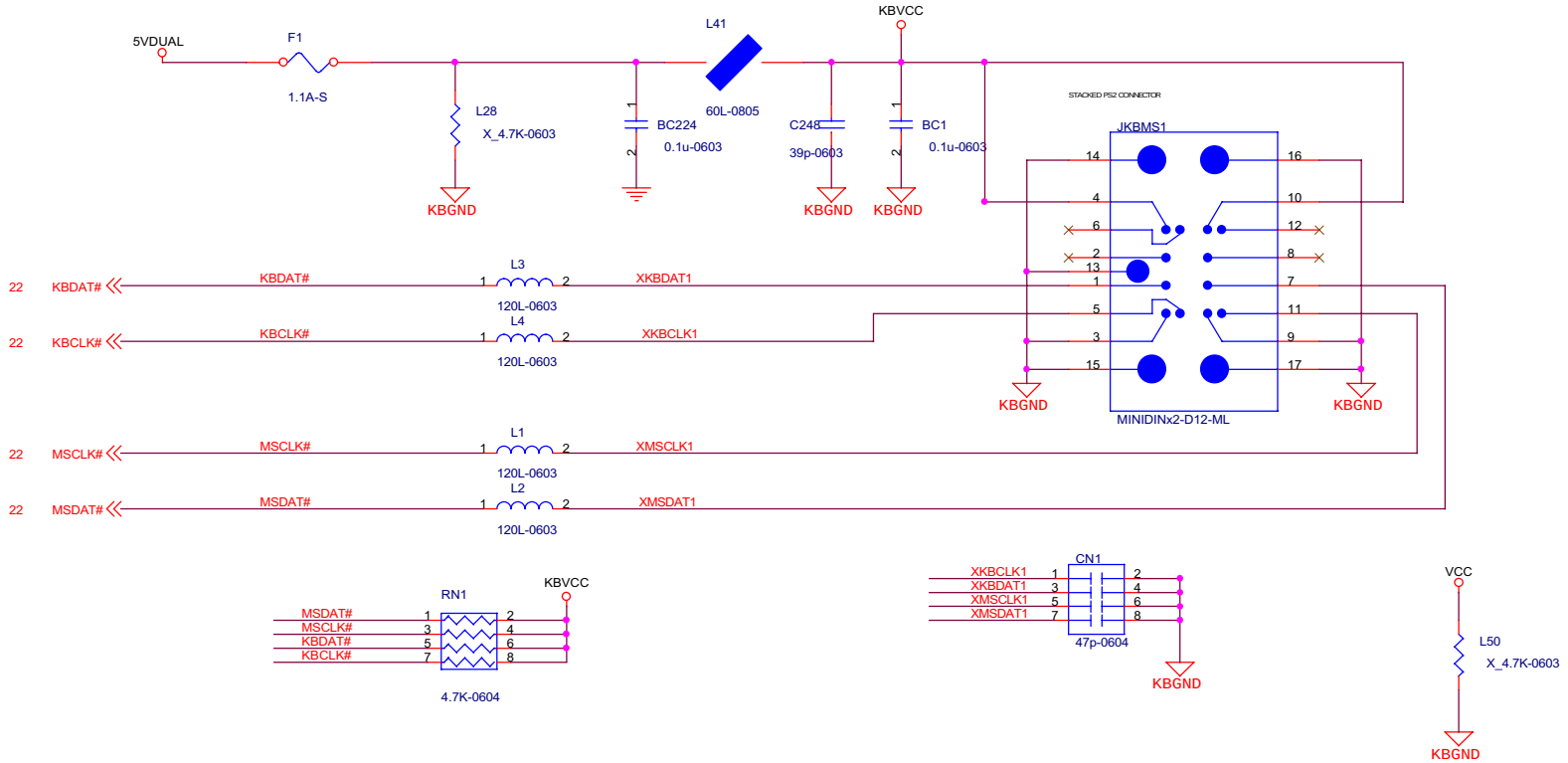

LAN WAKEUP HEADER

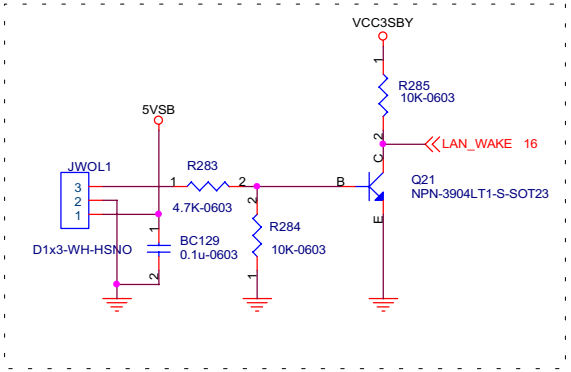

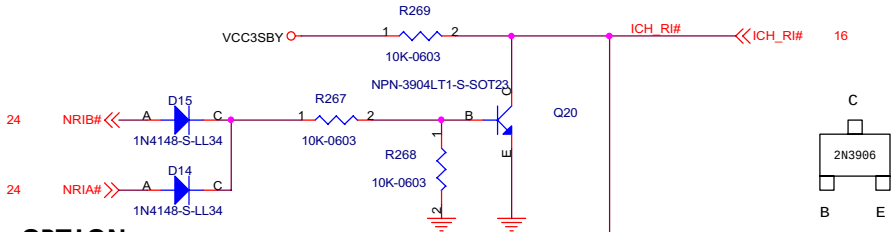

OPTION

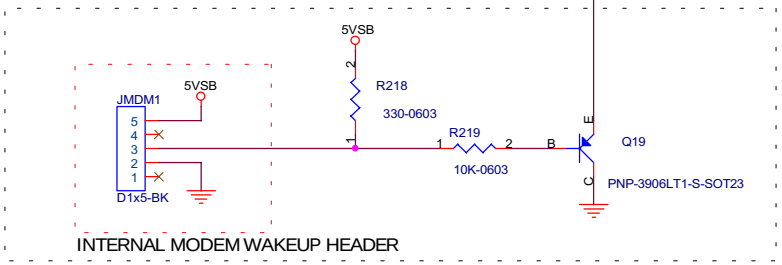

MSI

Title: PS2 PORT

Size	Document Number	Rev
	MS-6315-5.0	1.0

Date: Monday, October 08, 2001 Sheet 25 of 34

	C81	C109	C105	C106	C107	C111	EC26	RX1	RX2	RX3	RX4	RX5
STAC9721	820P	820P		104P			10U					
AD1881A	270P	270P	105P	105P	473P	104P		0				
AD1885	270P	270P	105P	105P	473P	104P			0	0	0	4.7K

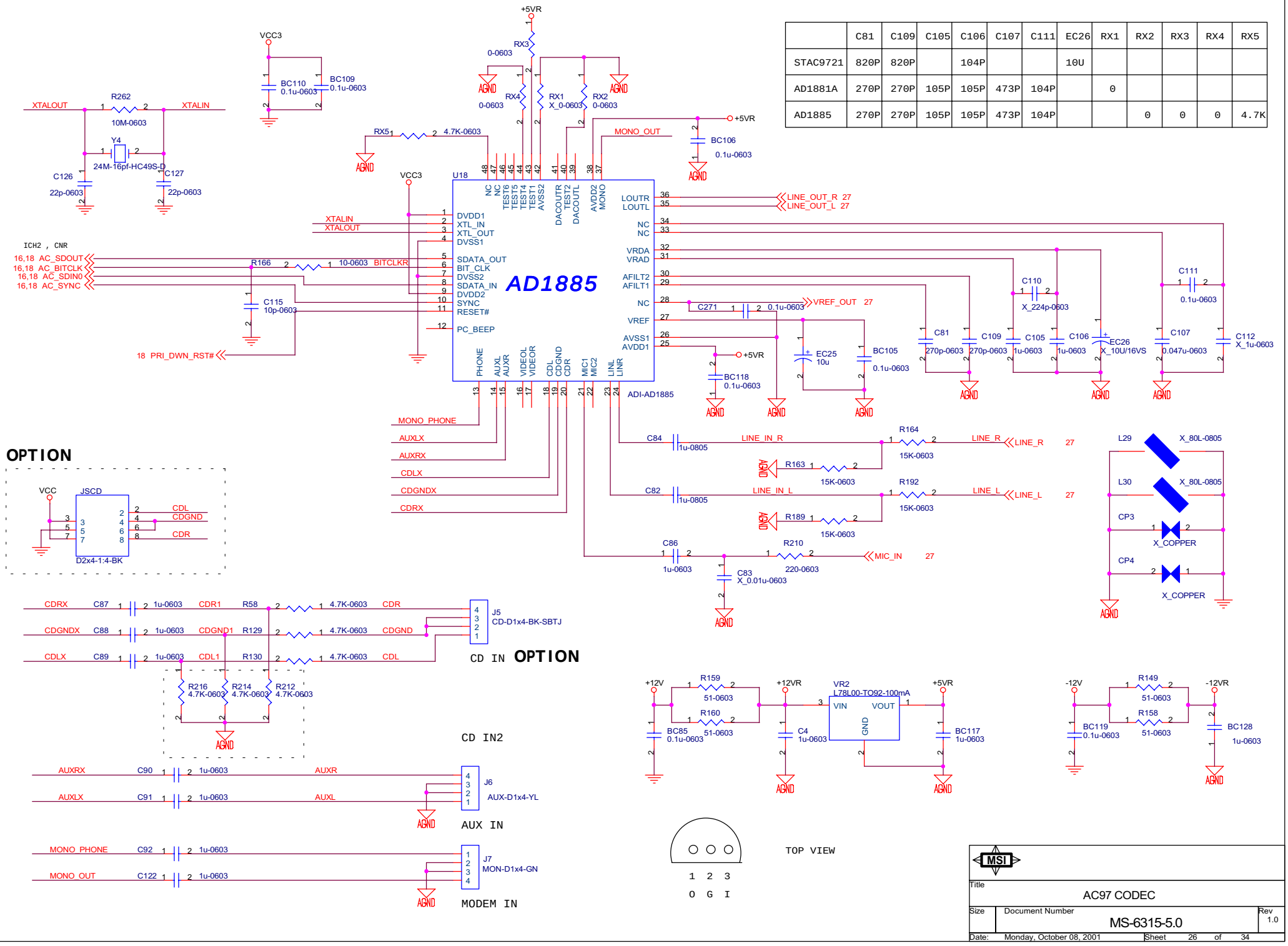

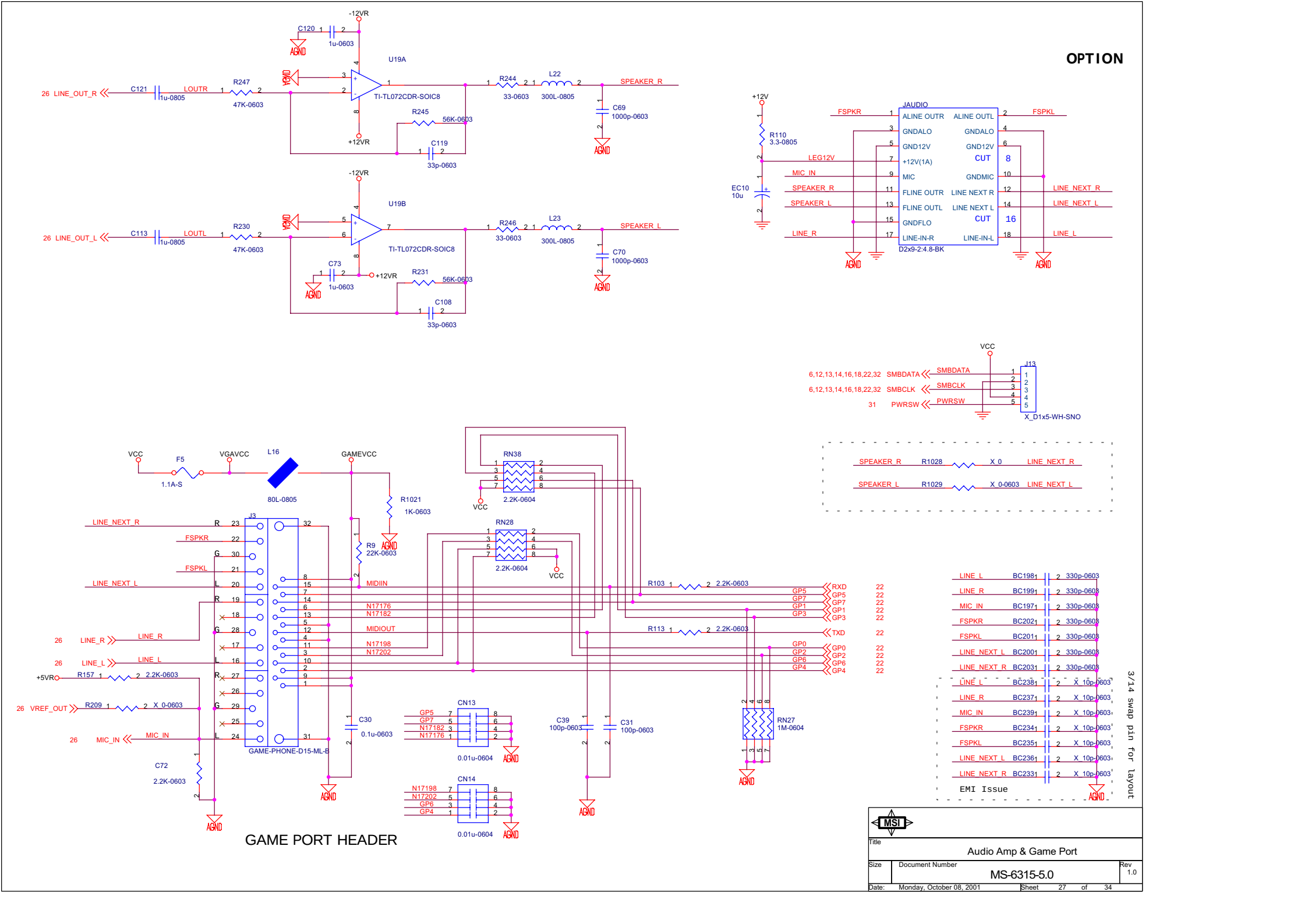
OPTION
-12VR
C120
1u-0603
AGND
U19A
VGAVCC
26 LINE_OUT_R
C121
1u-0805
LOUTR
R247
47K-0603
TI-TL072CDR-SOIC8
R244
33-0603
L22
300L-0805
SPEAKER_R
C69
1000p-0603
R245
56K-0603
+12VR
C119
33p-0603
U19B
26 LINE_OUT_L
C113
1u-0805
LOUTL
R230
47K-0603
R246
33-0603
L23
300L-0805
SPEAKER_L
C70
1000p-0603
C73
1u-0603
R231
56K-0603
C108
33p-0603
+12V
R110
3.3-0805
EC10
10u
JAUDIO
FSPKR
ALINE OUTR
ALINE OUTL
FSPKL
GNDALO
GND12V
LEG12V
+12V(1A)
CUT
8
MIC_IN
MIC
GNDMIC
SPEAKER_R
FLINE OUTR
LINE NEXT R
LINE_NEXT_R
SPEAKER_L
FLINE OUTL
LINE NEXT L
LINE_NEXT_L
GNDFLO
CUT
16
LINE_R
LINE-IN-R
LINE-IN-L
LINE_L
D2x9-2:4.8-BK
VCC
6,12,13,14,16,18,22,32 SMBDATA
SMBDATA
6,12,13,14,16,18,22,32 SMBCLK
SMBCLK
31 PWRSW
PWRSW
J13
X_D1x5-WH-SNO
SPEAKER_R R1028 X 0 LINE_NEXT_R
SPEAKER_L R1029 X 0-0603 LINE_NEXT_L
VCC
F5
1.1A-S
VGAVCC
L16
80L-0805
GAMEVCC
R1021
1K-0603
RN38
2.2K-0604
RN28
2.2K-0604
J3
LINE_NEXT_R
FSPKR
FSPKL
LINE_NEXT_L
MIDIIN
N17176
N17182
MIDIOUT
N17198
N17202
26 LINE_R
LINE_R
26 LINE_L
LINE_L
+5VR
R157 2.2K-0603
26 VREF_OUT
R209 X 0-0603
26 MIC_IN
MIC_IN
C72
2.2K-0603
GAME-PHONE-D15-ML-B
R9
22K-0603
C30
0.1u-0603
R103 2.2K-0603
R113 2.2K-0603
RXD
TXD
GP5
GP7
GP1
GP3
GP0
GP2
GP6
GP4
CN13
0.01u-0604
CN14
0.01u-0604
C39
100p-0603
C31
100p-0603
RN27
1M-0604
LINE_L BC198 330p-0603
LINE_R BC199 330p-0603
MIC_IN BC197 330p-0603
FSPKR BC202 330p-0603
FSPKL BC201 330p-0603
LINE_NEXT_L BC200 330p-0603
LINE_NEXT_R BC203 330p-0603
LINE_L BC238 X 10p-0603
LINE_R BC237 X 10p-0603
MIC_IN BC239 X 10p-0603
FSPKR BC234 X 10p-0603
FSPKL BC235 X 10p-0603
LINE_NEXT_L BC236 X 10p-0603
LINE_NEXT_R BC233 X 10p-0603
EMI Issue
3/14 swap pin for layout
GAME PORT HEADER
MSI
Title
Audio Amp & Game Port
Size
Document Number
MS-6315-5.0
Rev
1.0
Date: Monday, October 08, 2001
Sheet 27 of 34

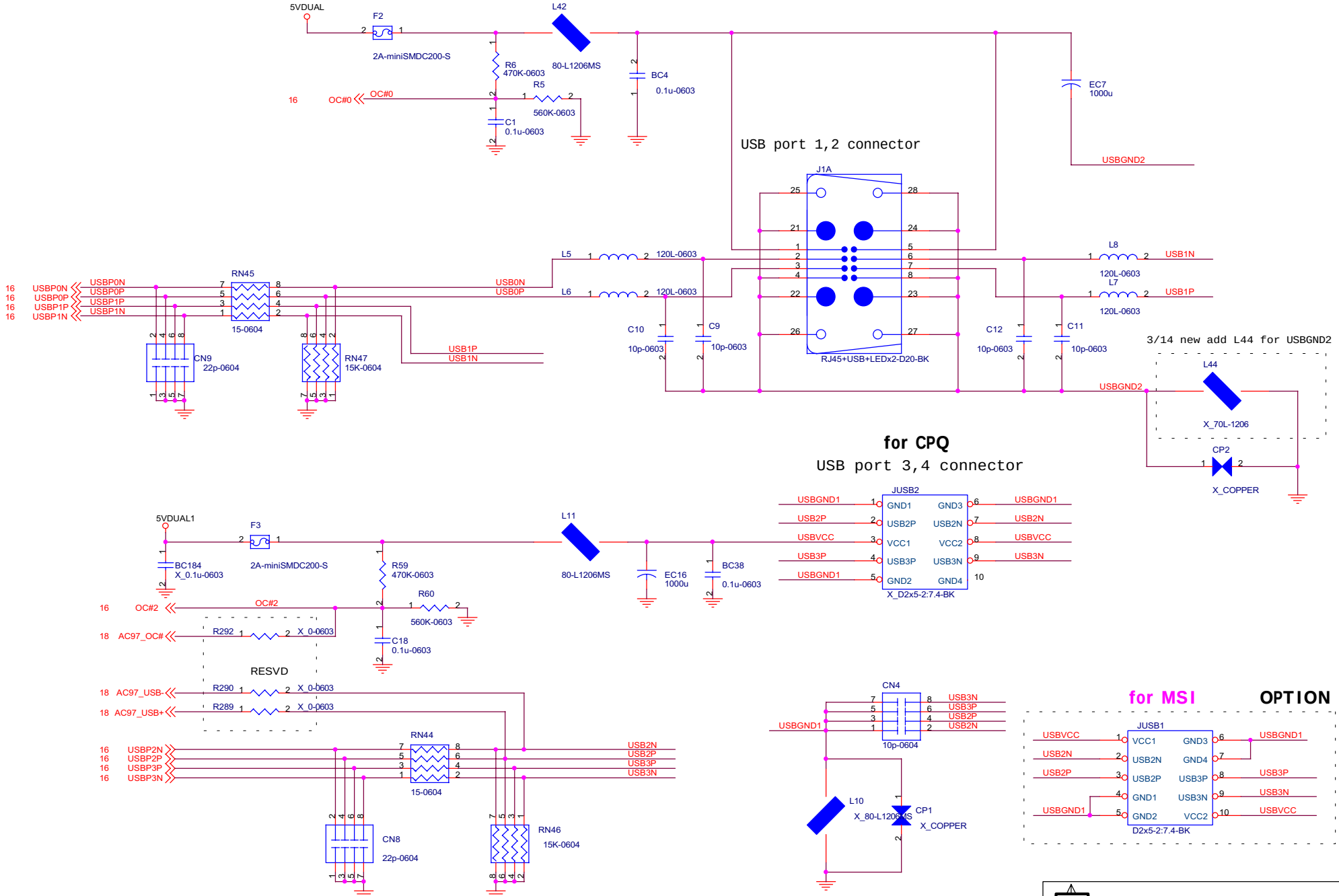

Title	USB PORT	
Size	Document Number MS-6315-5.0	Rev 1.0
Date: Monday, October 08, 2001	Sheet 28 of 34	

VRM 8.5

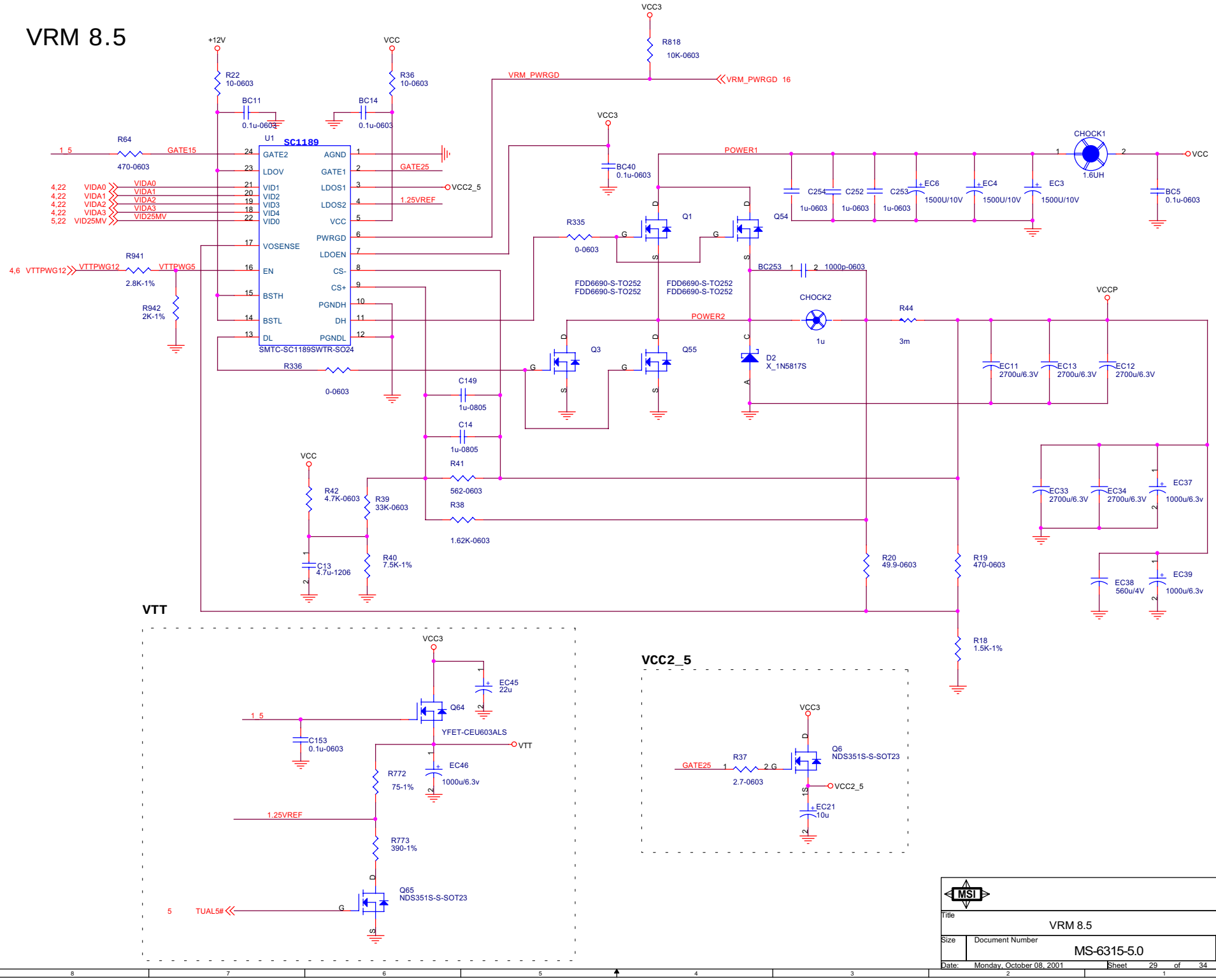

Title	VRM 8.5	
Size	Document Number MS-6315-5.0	Rev 1.0
Date: Monday, October 08, 2001	Sheet 29 of 34	

3.3V DUAL POWER TRANSLATOR

(100mils trace / 20 mils space)

3VDUAL

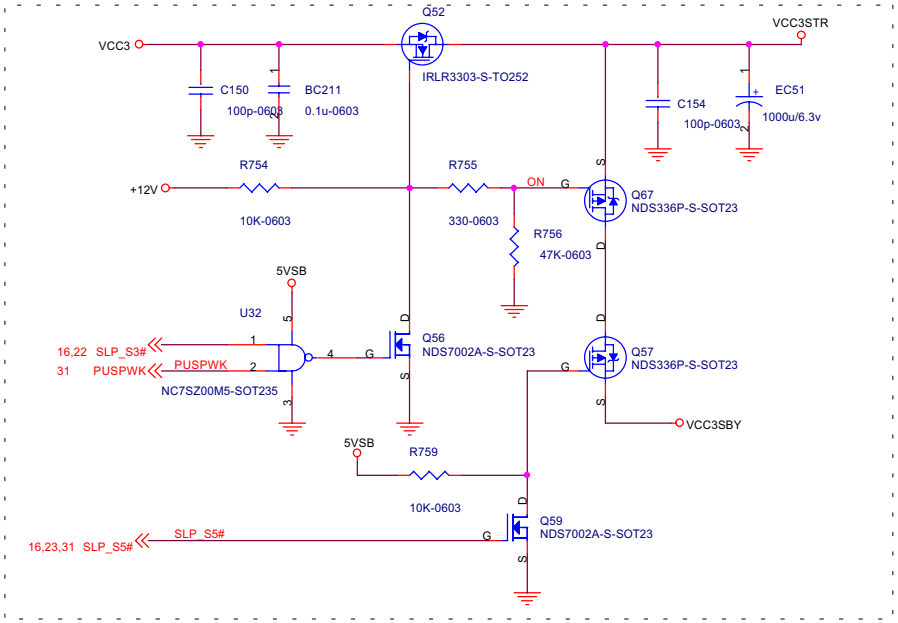

5VDUAL

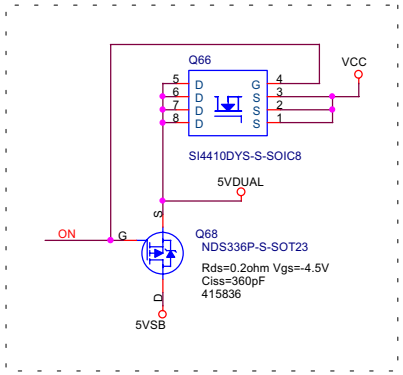

5VDUAL1

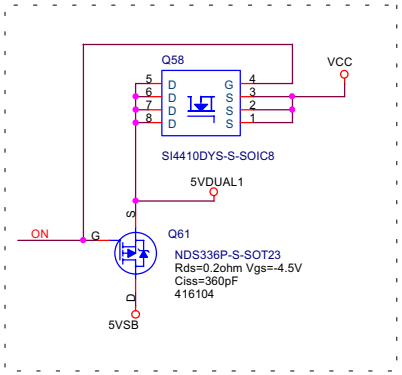

VCMOS

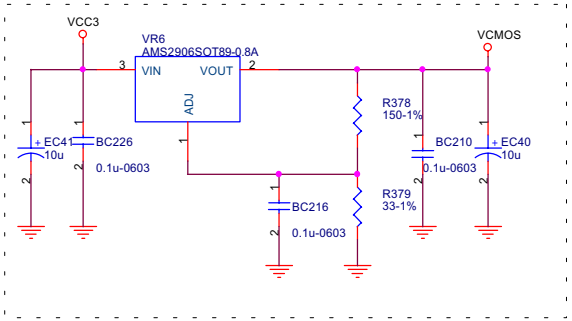

VCC18

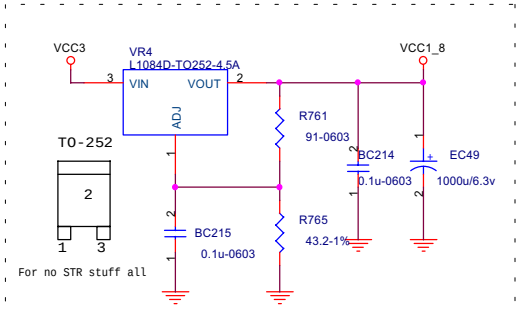

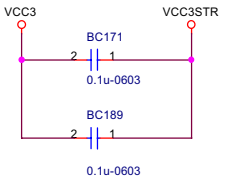

VCC3 SBY

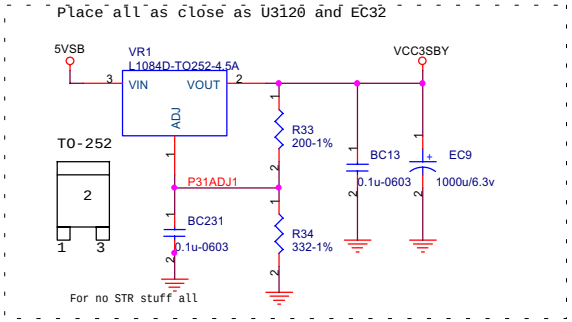

VCC18 SBY

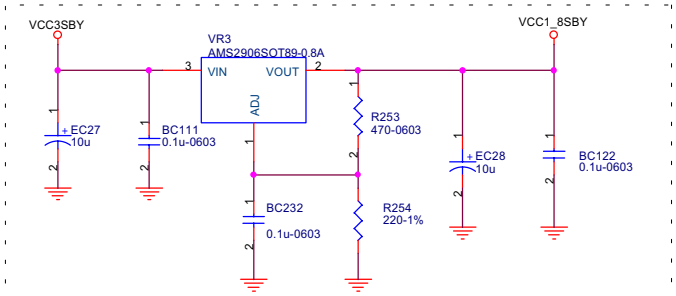

MSI

Title: VOLTAGE REQULATORS

Size	Document Number	Rev
	MS-6315-5.0	1.0

Date: Monday, October 08, 2001 Sheet 30 of 34

Power Connector

BULK POWER DECOUPLING

3/14 change part reference

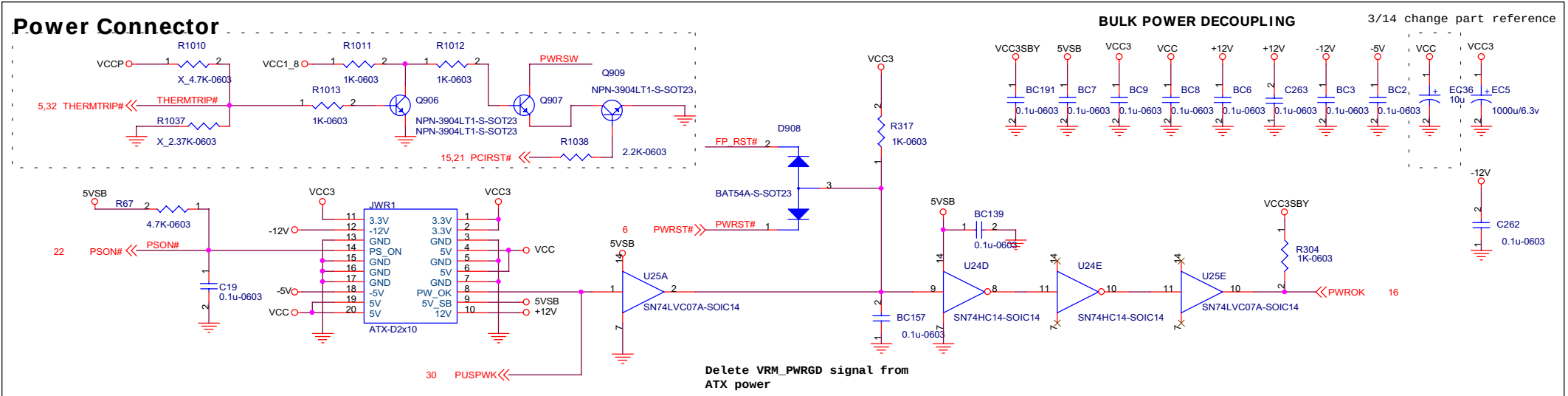

Delete VRM_PWRGD signal from ATX power

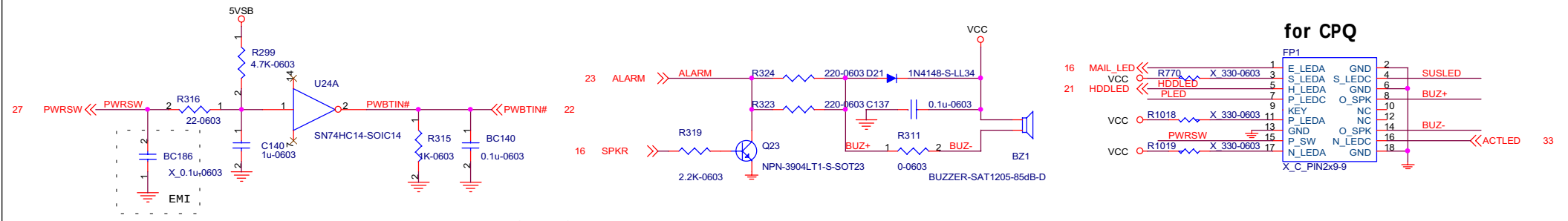

for CPQ

OPTION

for MSI

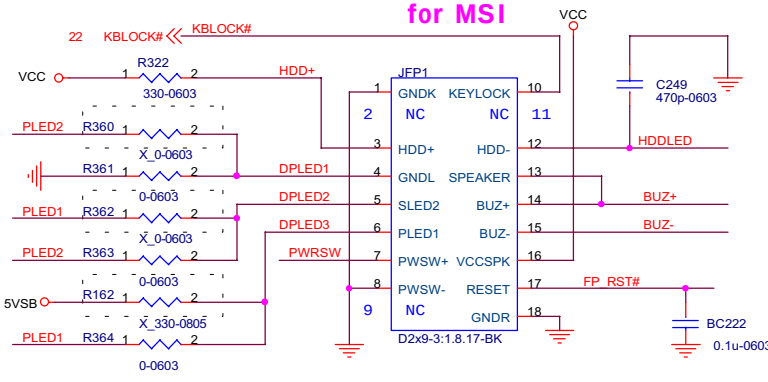

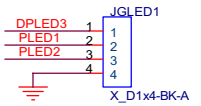

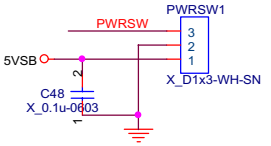

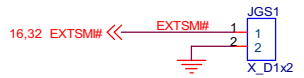

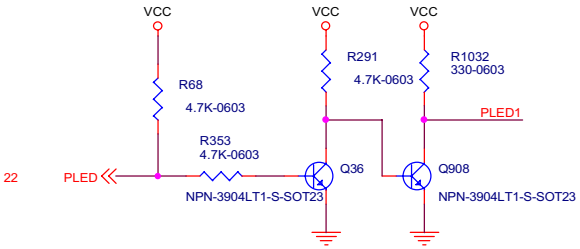

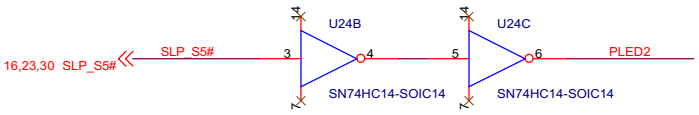

MSI			
Title	FRONT PANEL / POWER CONNECTOR		
Size	Document Number	MS-6315-5.0	Rev 1.0
Date: Monday, October 08, 2001	Sheet 31 of 34		

PULL-UP RESISTORS

PCI BUS

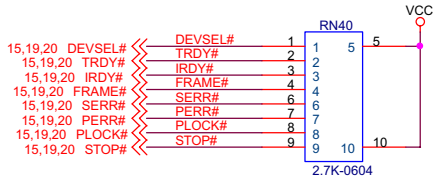

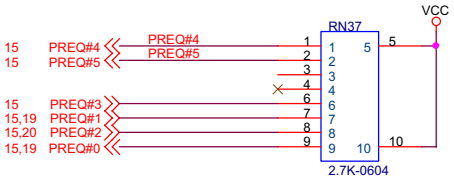

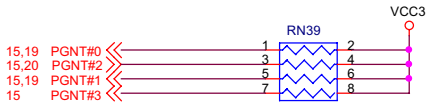

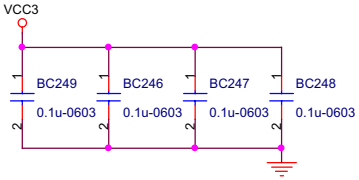

ICH

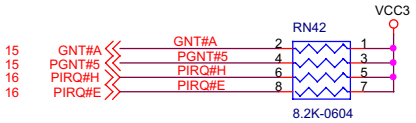

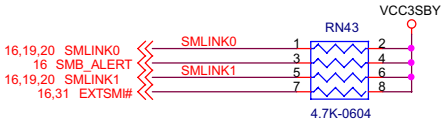

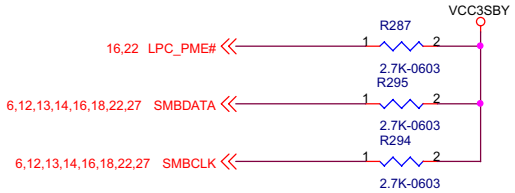

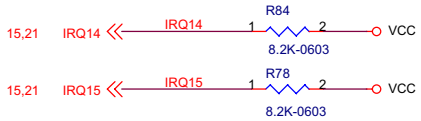

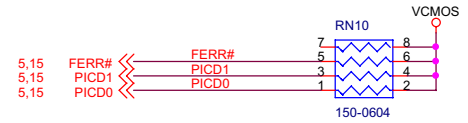

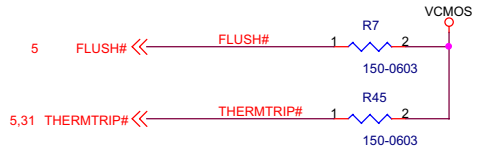

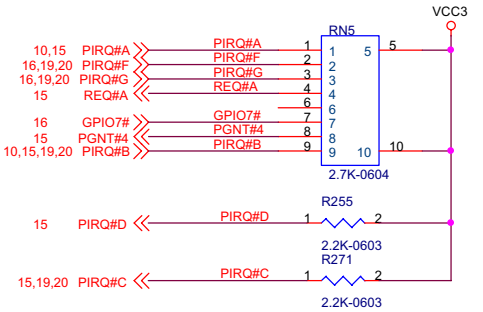

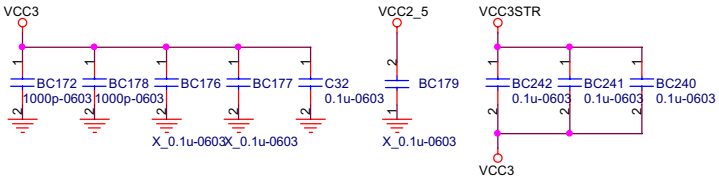

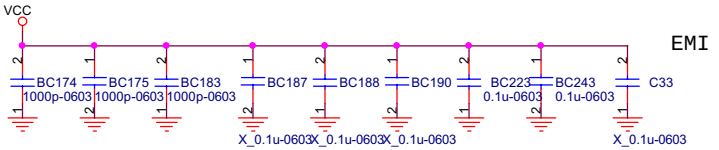

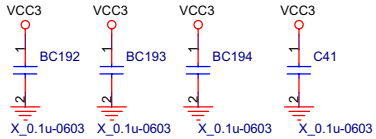

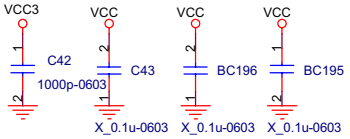

CPU VCORE Bypass Capacitor put in CPU socket

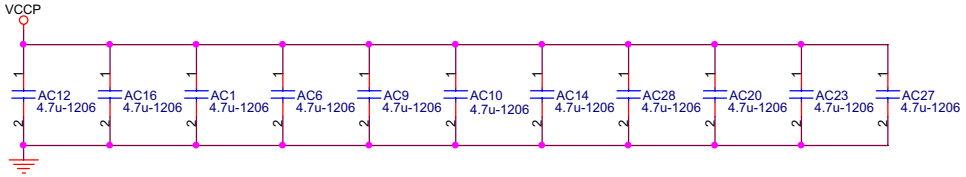

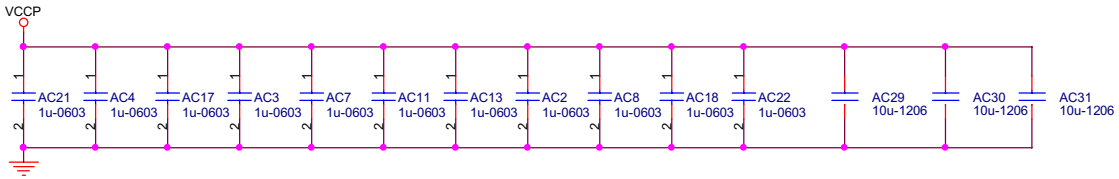

MSI

Title: PULL UP RESISTORS

Size | Document Number: MS-6315-5.0 | Rev: 1.0

Date: Monday, October 08, 2001 | Sheet 32 of 34

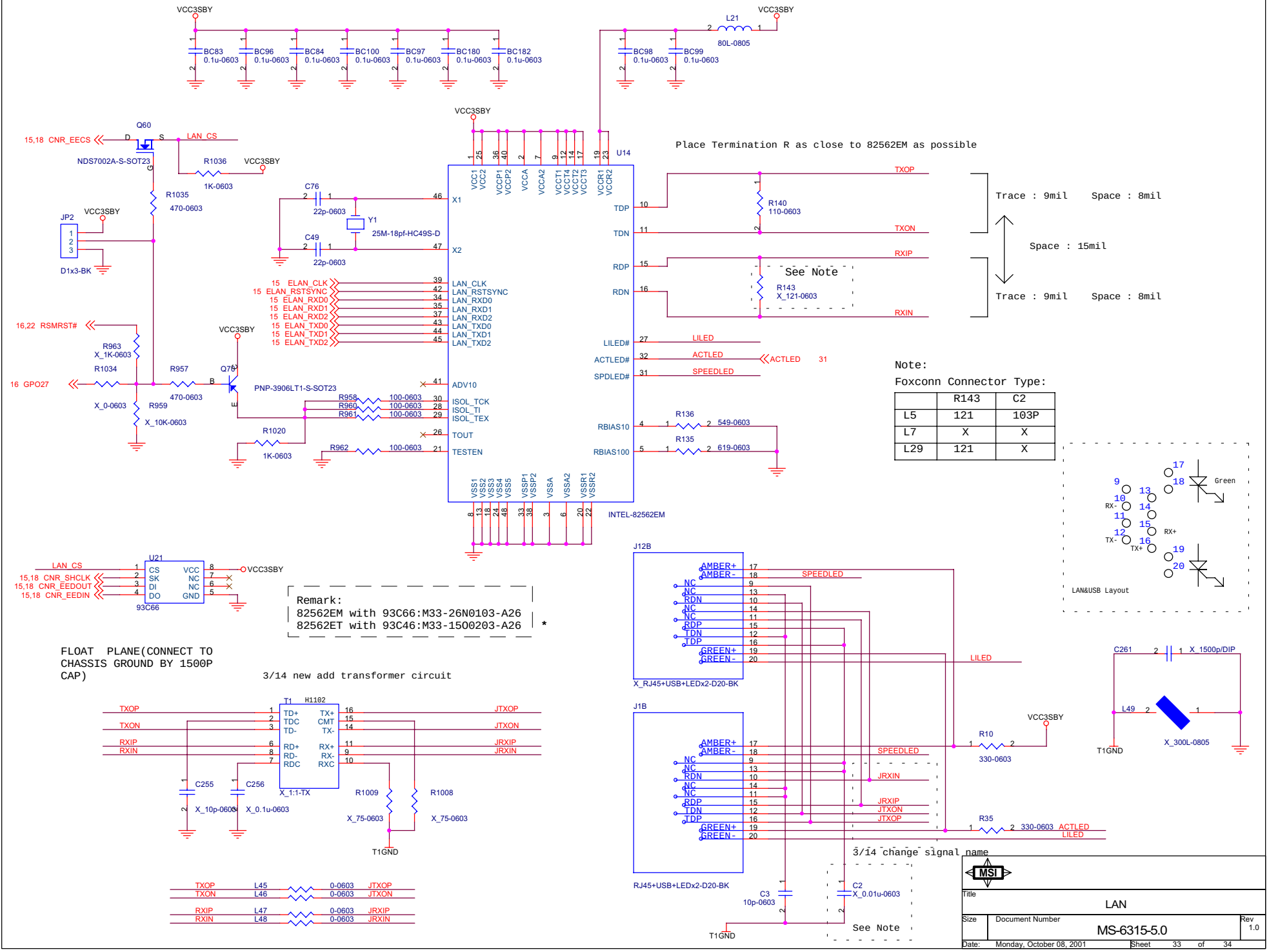

	R143	C2
L5	121	103P
L7	X	X
L29	121	X

MSI

Title: LAN

Size | Document Number: MS-6315-5.0 | Rev: 1.0

Date: Monday, October 08, 2001 | Sheet 33 of 34

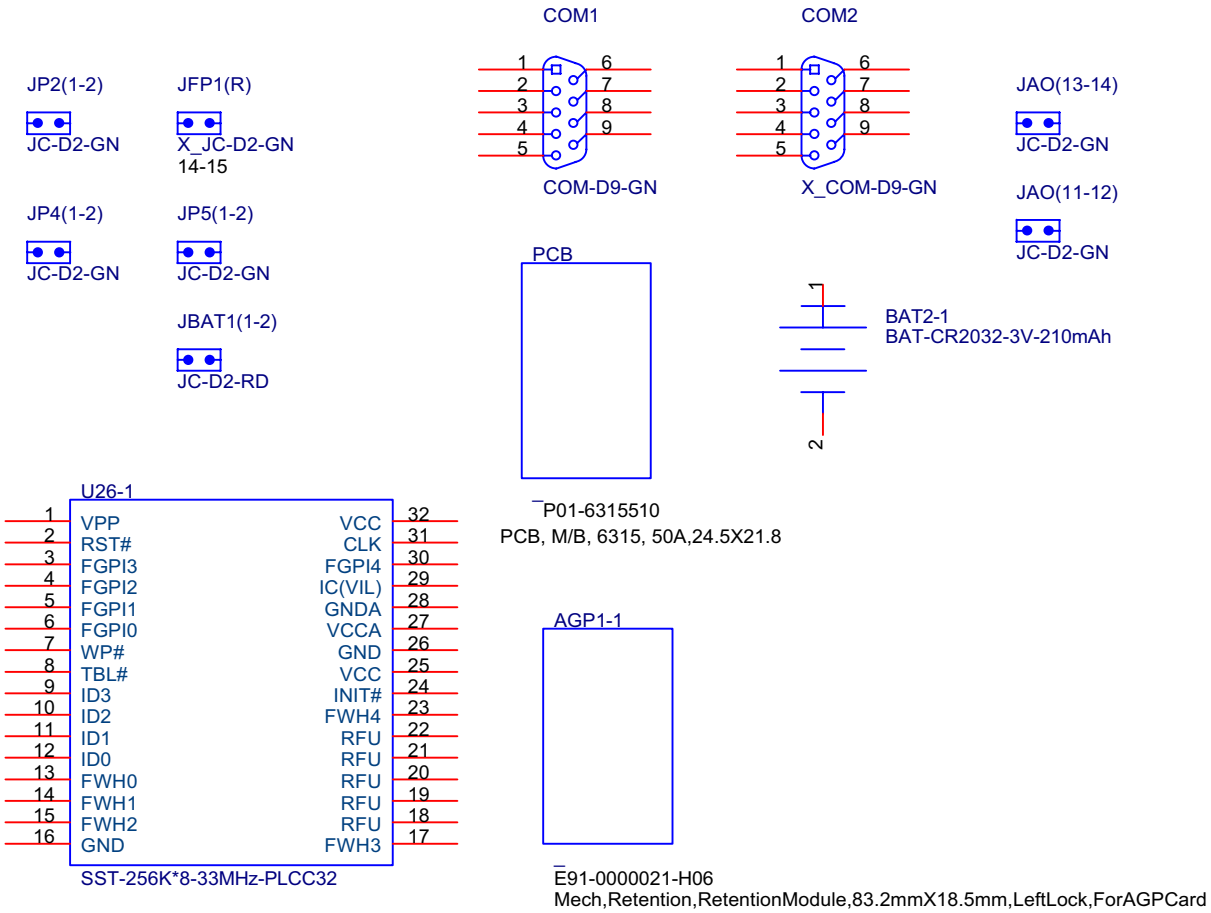

MSI

Title: MANUAL

Size	Document Number	Rev
	MS-6315-5.0	1.0

Date: Monday, October 08, 2001 Sheet 34 of 34

MS-6315 5.0 1.0 Micro-ATX W/S LAN

Intel FCPGA / FCPGA2 370 Processor

Intel 815E /815EP B-STEP Chipset

Winbond 83627HF-AW / 83627F +W83782D

Intel82562ET / 82562EM Chipset

Last Schematic Update Date:

06/07/2001

Title	Page
Cover Sheet	1
Block Diagram	2
BIOS GPIO SPEC	3
370PGA Socket	4,5
Clock Synthesizer	6
GMCH	7,8,9
AGP / AIMM Display Cache	10
Graphics Connectors	11
System Memory	12,13,14
ICH2	15,16
FWH	17
CNR Riser	18
PCI Connectors	19,20
ATA100 Connectors	21
LPC I/O	22
Hardware monitor	23
Parallel / Serial Port	24
Keyboard/Mouse Connectors	25
AC'97 Codec	26
Audio Amp	27
USB HUB & USB Connectors	28
VRM 8.5	29
Voltage Regulators	30
Front Panel / Power connector	31
Pull-up Resistors	32
LAN	33

MSI

Title: COVER PAGE

Size | Document Number: MS-6315-5.0 | Rev: 1.0

Date: Friday, August 17, 2001 | Sheet 1 of 34

Block Diagram

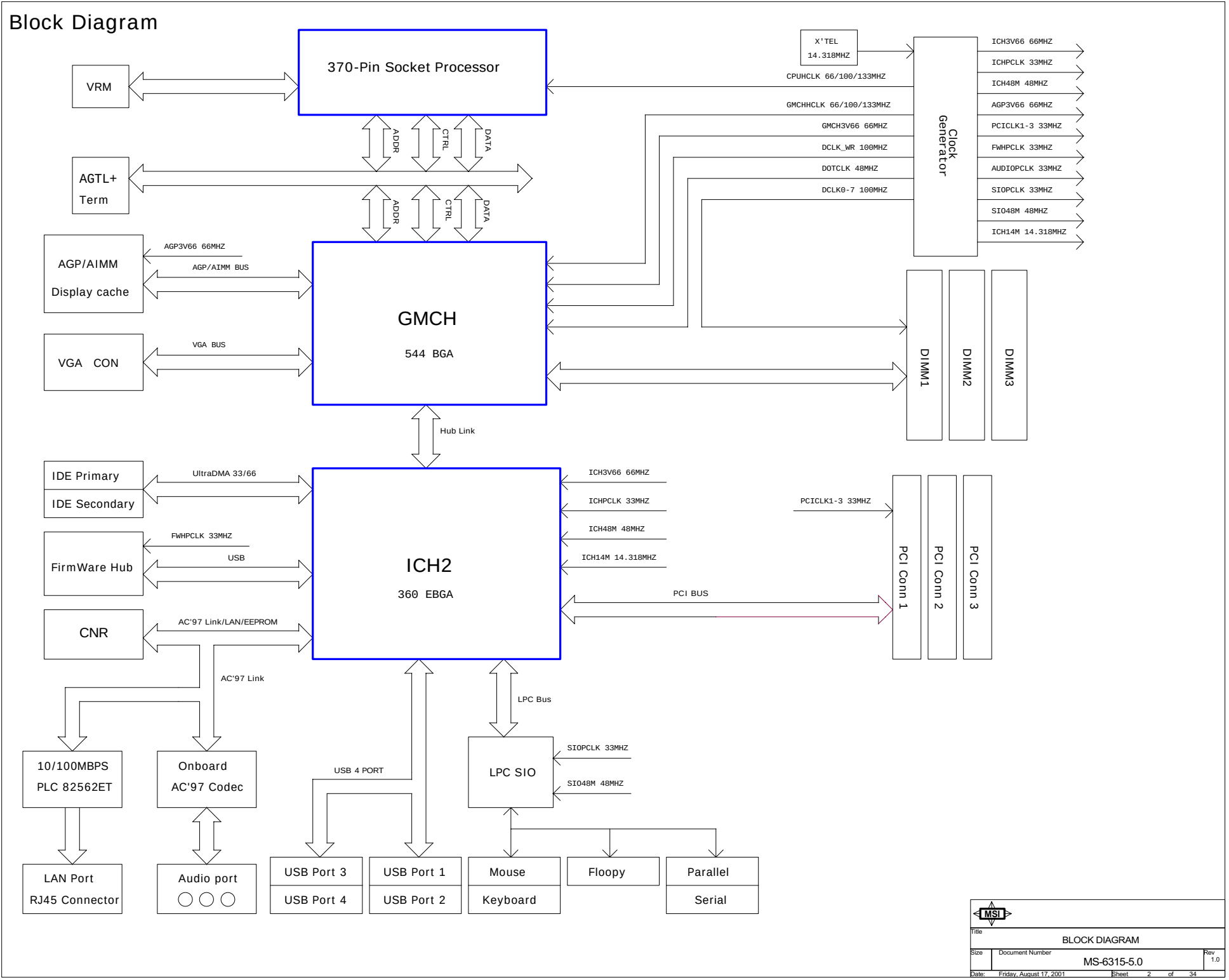

Title	BLOCK DIAGRAM	
Size	Document Number MS-6315-5.0	Rev 1.0
Date: Friday, August 17, 2001	Sheet 2 of 34	

General Purpose I/O Spec.

ICH

GPIO Pin	Type	Function
GPIO 0		Pull up (REQ#A)
GPIO 1		PREQ#5
GPIO 2		PIRQ#E
GPIO 3		PIRQ#F
GPIO 4		PIRQ#G
GPIO 5		PIRQ#H
GPIO 6		AC97 Codec High / Disable Low / Enable
GPIO 7		PULL UP
GPIO 8		LAN Wake Up
GPIO 9		Not Implemented
GPIO 10		Not Implemented
GPIO 11		SMB_ALERT
GPIO 12		External SMI
GPIO 13		LPC PME
GPIO 14~15		Not Implemented
GPIO 16		Pull up(GNT#A)
GPIO 17		PGNT#5
GPIO 18		MAIL LED
GPIO 19~21		NC
GPIO 22		Pull up
GPIO 23		NC
GPIO 24		NC
GPIO 25		EEPROM CS Control
GPIO 26		Not Implemented
GPIO 27		LAN Control ON / OFF
GPIO 28		A20M# Control
GPIO 29~31		Not Implemented

PCI Config.

DEVICE	ICH INT Pin	IDSEL
PCI Slot 1	INTC# INTF# INTG# INTB#	AD25
PCI Slot 2	INTF# INTG# INTB# INTC#	AD26
PCI Slot 3	INTG# INTB# INTC# INTF#	AD27

FWH

GPIO Pin	Type	Function
GPI 0	I	ATA IDE 1 Detect
GPI 1	I	ATA IDE 2 Detect
GPI 2	I	CONFIGURATION
GPI 3	I	CONFIGURATION

ICH2 SMLINK0,1 Connect to PCI1,2,3 for PCI card AOL

Title	BIOS GPIO SPEC.		
Size	Document Number	MS-6315-5.0	Rev 1.0
Date: Friday, August 17, 2001	Sheet 3 of 34		

370PGA Socket Part 1

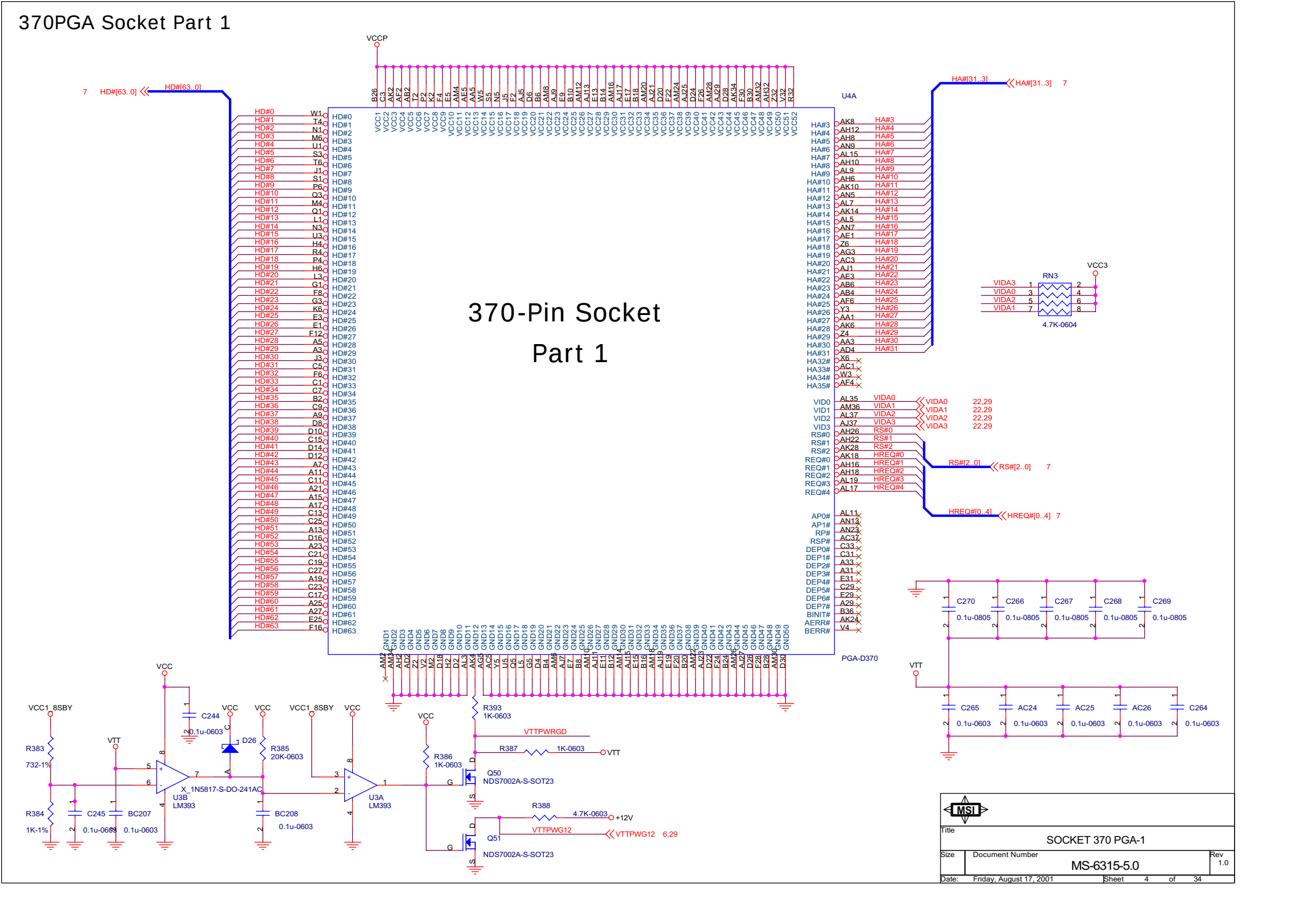

Title	SOCKET 370 PGA-1		
Size	Document Number	MS-6315-5.0	Rev 1.0
Date: Friday, August 17, 2001	Sheet 4 of 34		

370PGA Socket Part 2

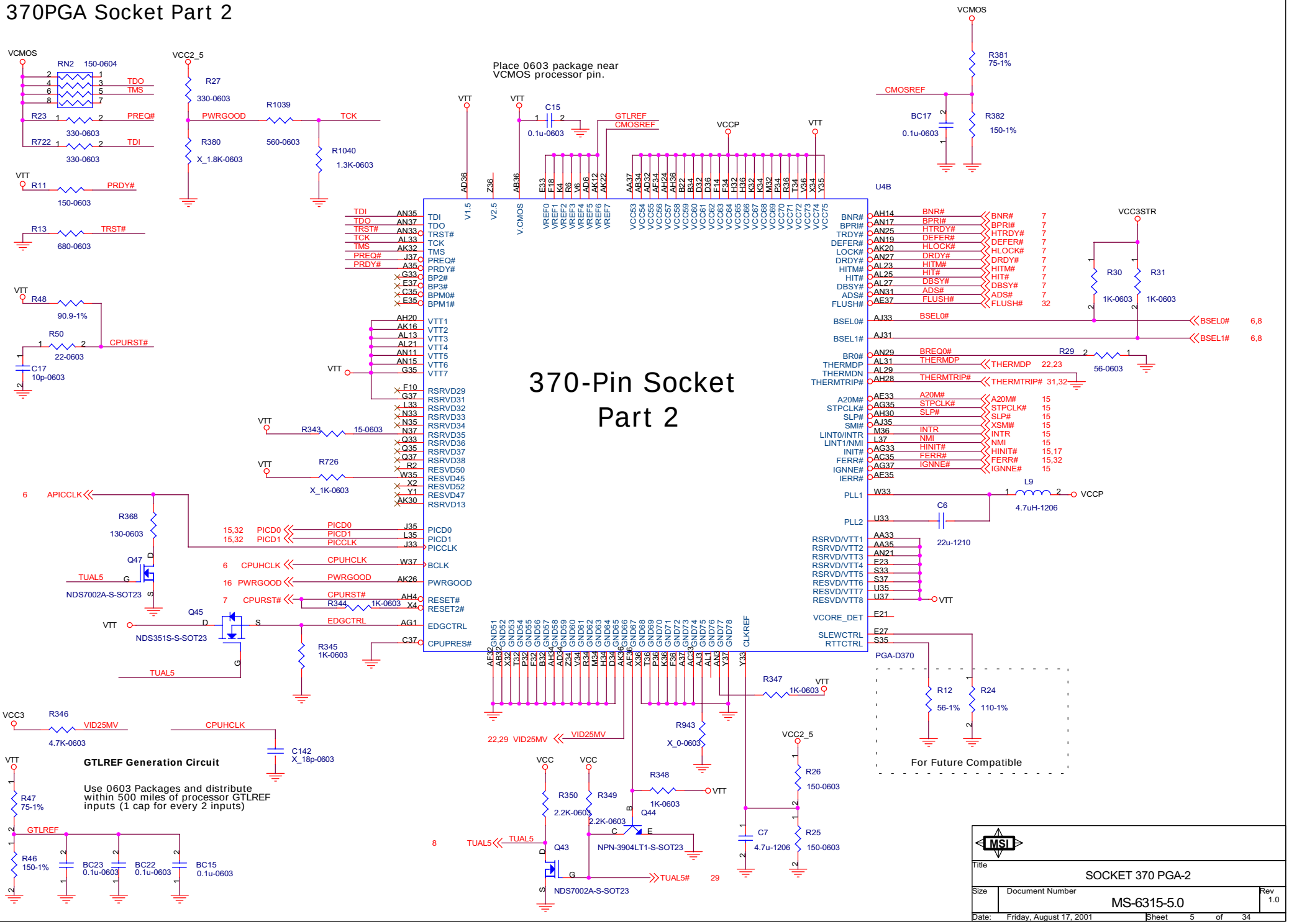

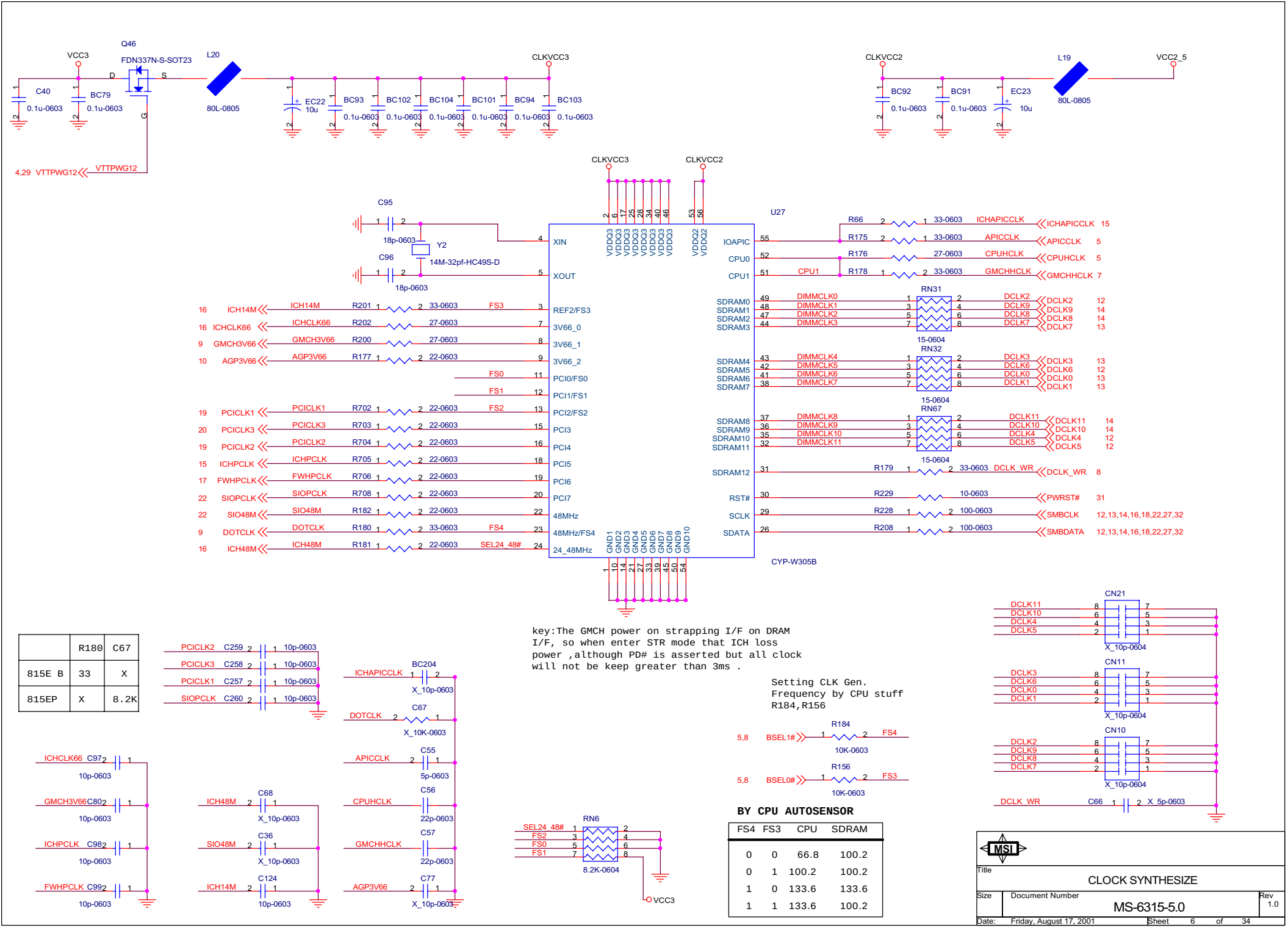
Q46
FDN337N-S-SOT23
VCC3
L20
80L-0805
CLKVCC3
C40
0.1u-0603
BC79
0.1u-0603
EC22
10u
BC93
BC102
BC104
BC101
BC94
BC103
4,29 VTTPWG12
VTTPWG12
CLKVCC2
L19
VCC2_5
BC92
BC91
EC23
U27
CLKVCC3
CLKVCC2
C95
18p-0603
Y2
14M-32pf-HC49S-D
C96
XIN
XOUT
REF2/FS3
3V66_0
3V66_1
3V66_2
PCI0/FS0
PCI1/FS1
PCI2/FS2
PCI3
PCI4
PCI5
PCI6
PCI7
48MHz
48MHz/FS4
24_48MHz
IOAPIC
CPU0
CPU1
SDRAM0
SDRAM1
SDRAM2
SDRAM3
SDRAM4
SDRAM5
SDRAM6
SDRAM7
SDRAM8
SDRAM9
SDRAM10
SDRAM11
SDRAM12
RST#
SCLK
SDATA
CYP-W305B
RN31
RN32
RN67
15-0604
ICH14M
ICHCLK66
GMCH3V66
AGP3V66
PCICLK1
PCICLK3
PCICLK2
ICHPCLK
FWHPCLK
SIOPCLK
SIO48M
DOTCLK
ICH48M
DIMMCLK0
DIMMCLK1
DIMMCLK2
DIMMCLK3
DIMMCLK4
DIMMCLK5
DIMMCLK6
DIMMCLK7
DIMMCLK8
DIMMCLK9
DIMMCLK10
DIMMCLK11
DCLK_WR
PWRST#
SMBCLK
SMBDATA
ICHAPICCLK
APICCLK
CPUHCLK
GMCHHCLK
key:The GMCH power on strapping I/F on DRAM
I/F, so when enter STR mode that ICH loss
power ,although PD# is asserted but all clock
will not be keep greater than 3ms .
Setting CLK Gen.
Frequency by CPU stuff
R184,R156
BSEL1#
BSEL0#
10K-0603
BY CPU AUTOSENSOR
FS4 FS3 CPU SDRAM
0 0 66.8 100.2
0 1 100.2 100.2
1 0 133.6 133.6
1 1 133.6 100.2
R180 C67
815E B 33 X
815EP X 8.2K
CN21
CN11
CN10
X_10p-0604
DCLK_WR C66 X_5p-0603
RN6
8.2K-0604
VCC3
MSI
Title
CLOCK SYNTHESIZE
Size
Document Number
MS-6315-5.0
Rev
1.0
Date: Friday, August 17, 2001
Sheet 6 of 34

82815, PART 1 : HOST INTERFACE

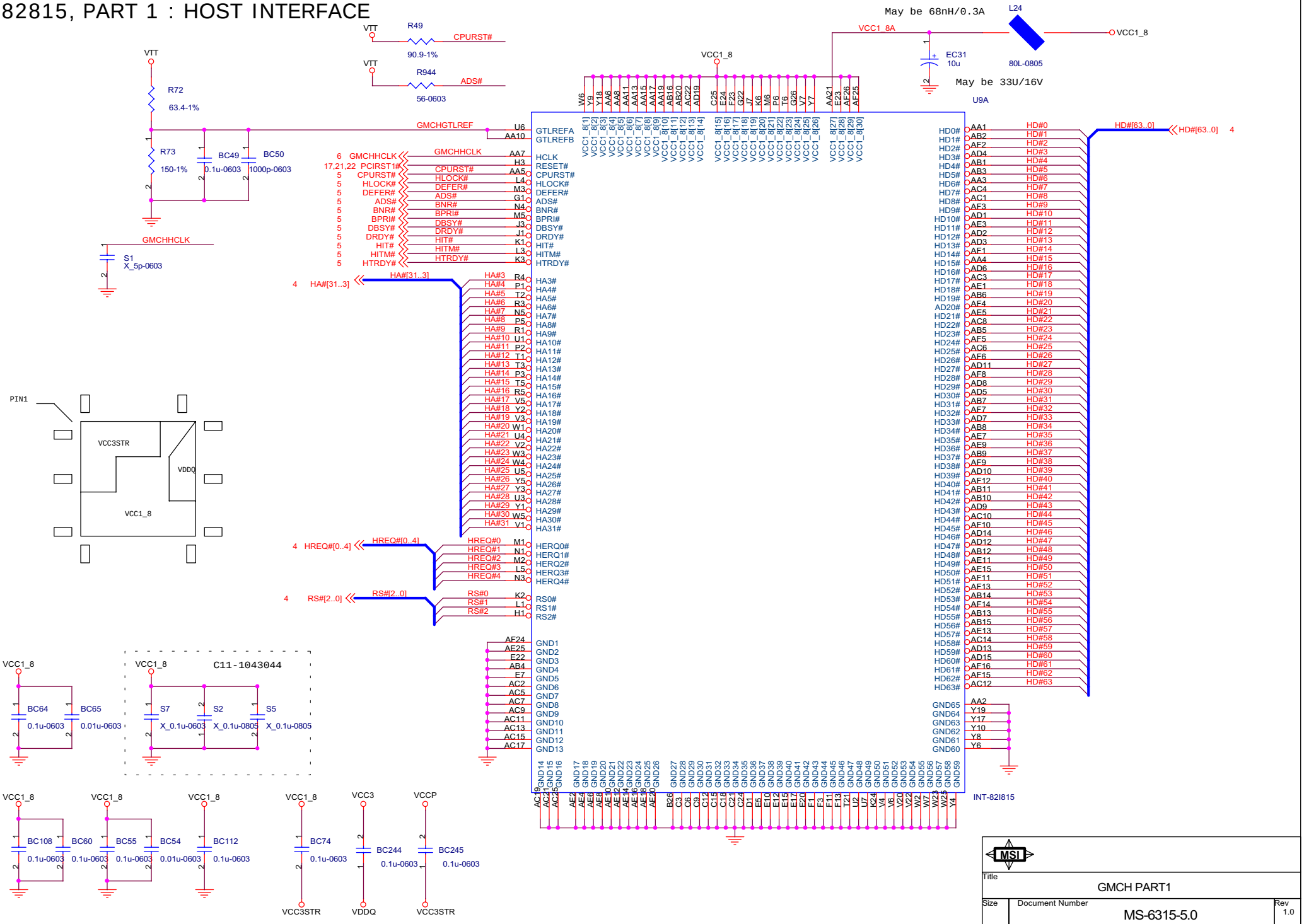

Title	GMCH PART1	
Size	Document Number MS-6315-5.0	Rev 1.0
Date: Friday, August 17, 2001	Sheet 7 of 34	

GMCH, PART 2 : SYSTEM MEMORY

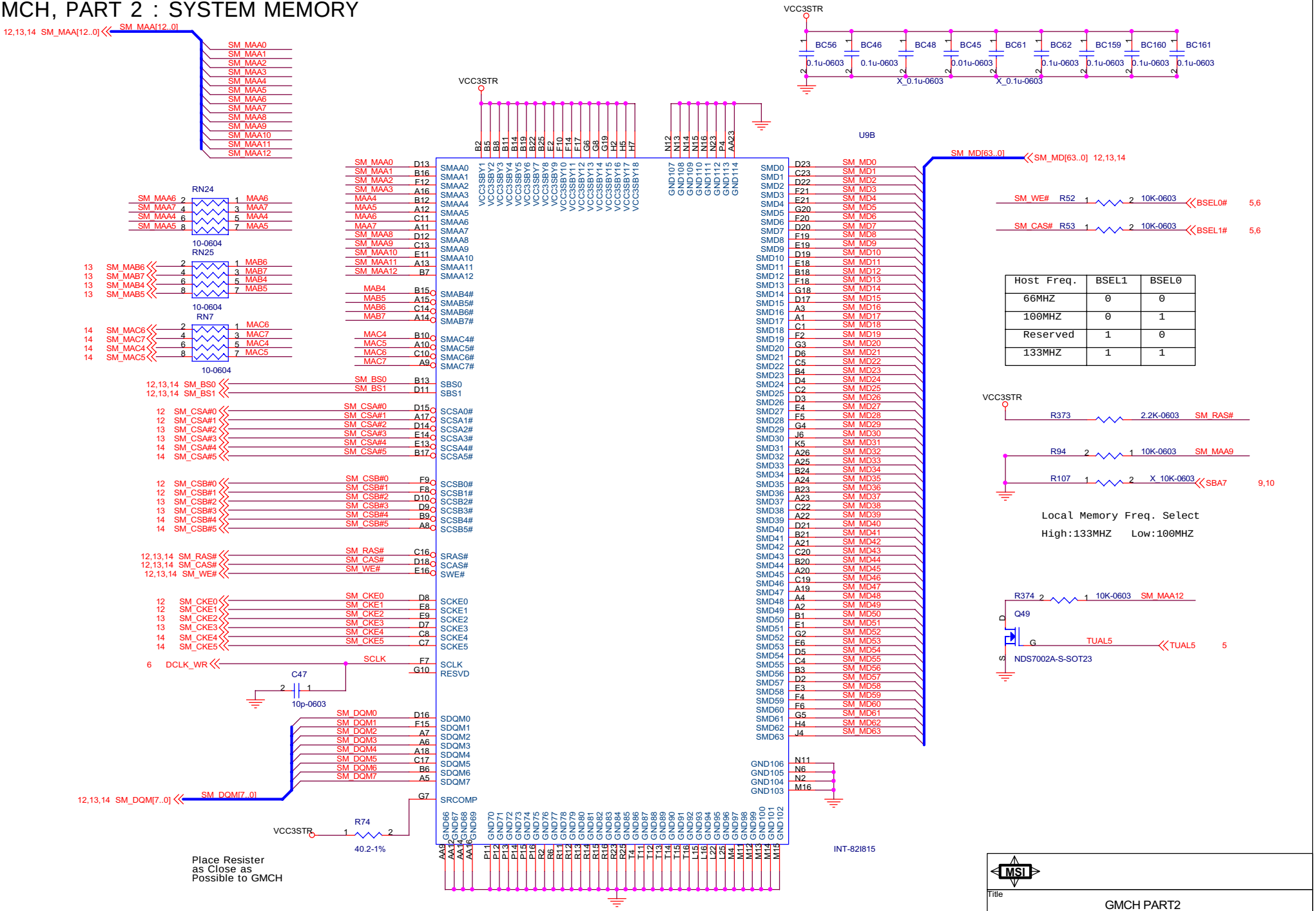

Title	GMCH PART2	
Size	Document Number MS-6315-5.0	Rev 1.0
Date: Friday, August 17, 2001	Sheet 8 of 34	

GMCH PART 3 : AGP & VIDEO Interface & HUB link

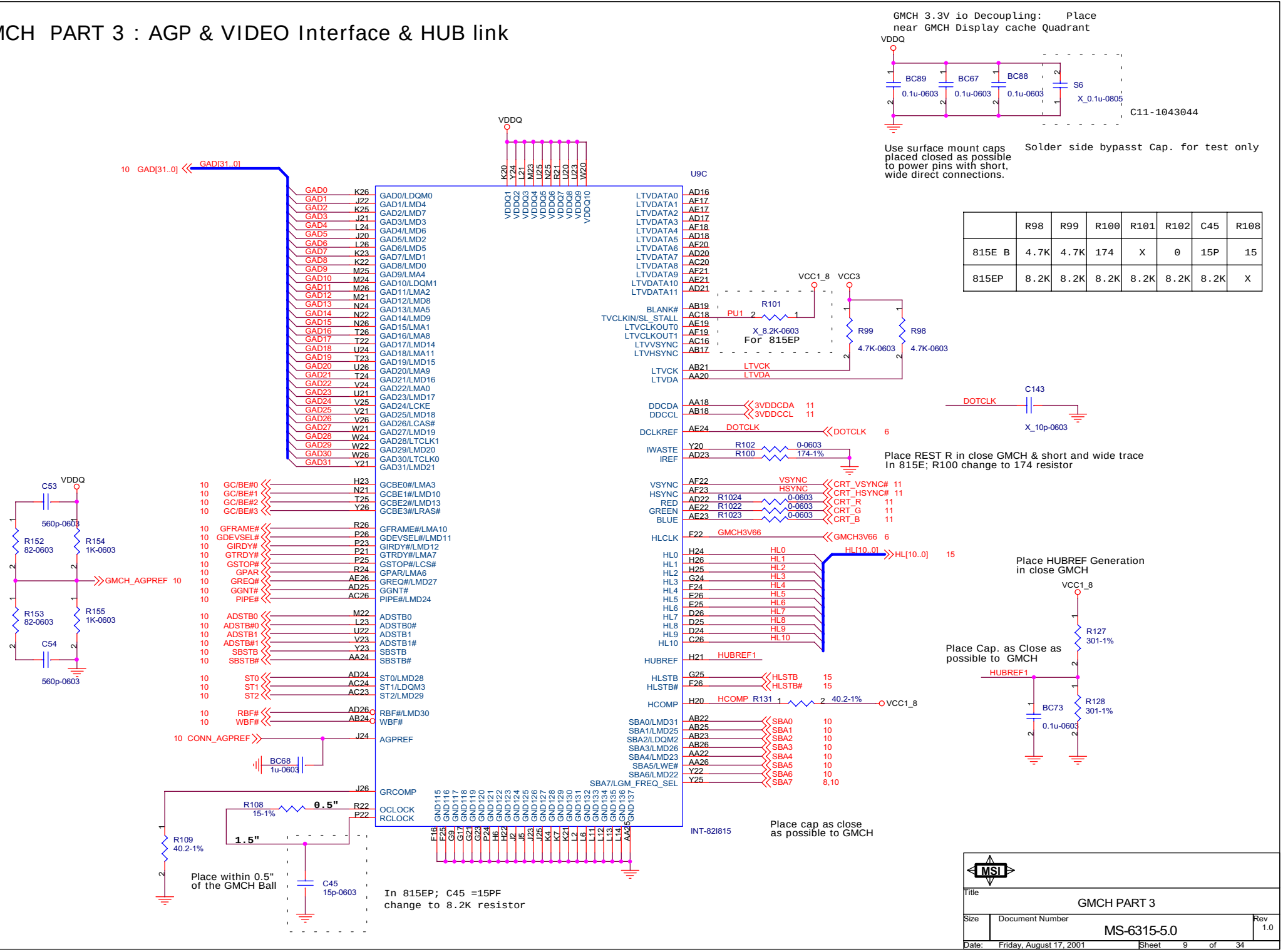

	R98	R99	R100	R101	R102	C45	R108
815E B	4.7K	4.7K	174	X	0	15P	15
815EP	8.2K	8.2K	8.2K	8.2K	8.2K	8.2K	X

Title	GMCH PART 3	
Size	Document Number MS-6315-5.0	Rev 1.0
Date: Friday, August 17, 2001	Sheet 9 of 34	

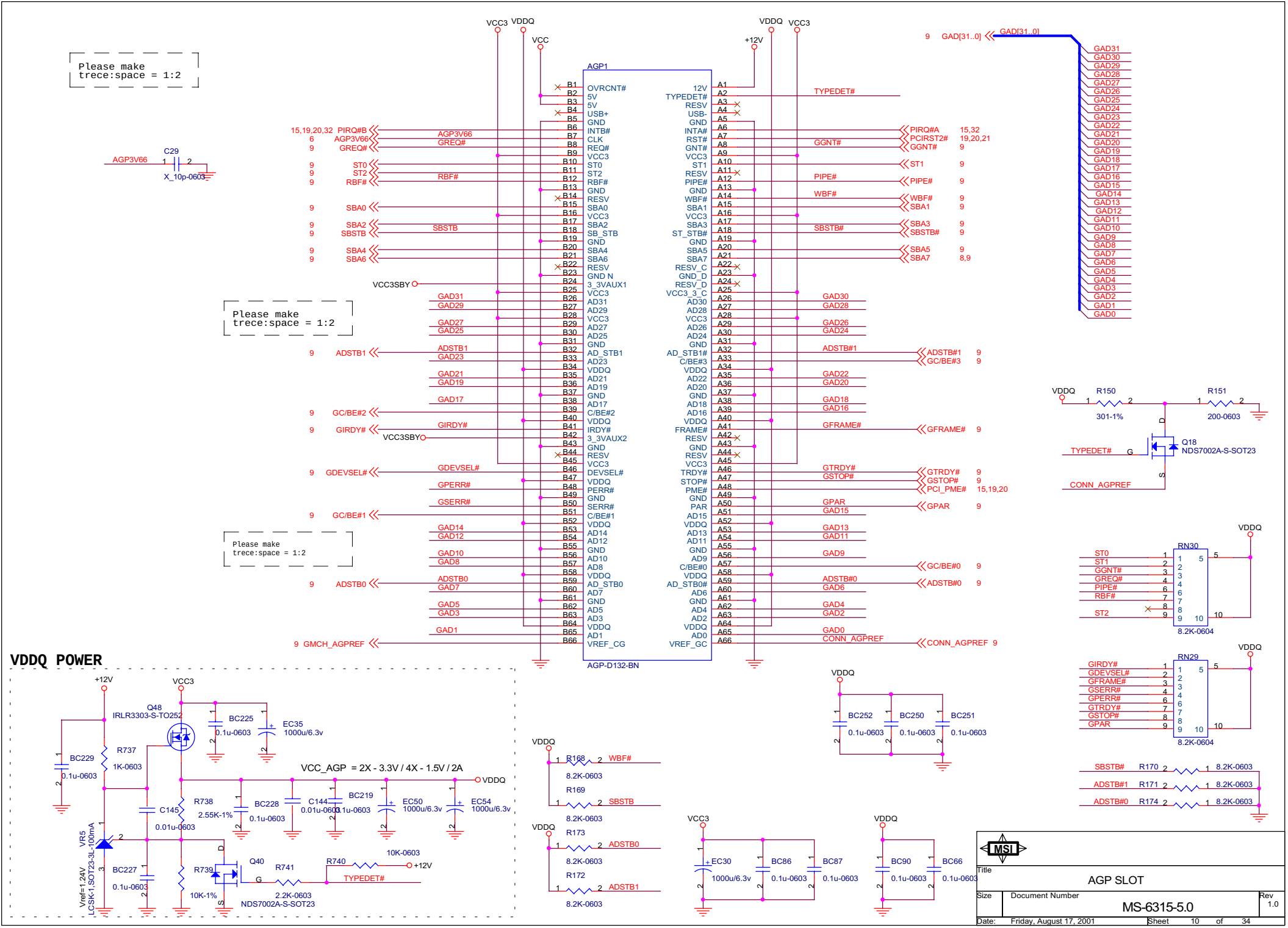
Please make trece:space = 1:2
Please make trece:space = 1:2
Please make trece:space = 1:2
AGP1
AGP-D132-BN
VDDQ POWER
VCC_AGP = 2X - 3.3V / 4X - 1.5V / 2A
AGP3V66
C29
X_10p-0603
VCC3SBY
GAD[31..0]
TYPEDET#
PIRQ#A
PCIRST2#
GGNT#
ST1
PIPE#
WBF#
SBA1
SBA3
SBSTB#
SBA5
SBA7
GAD30
GAD28
GAD26
GAD24
ADSTB#1
GC/BE#3
GAD22
GAD20
GAD18
GAD16
GFRAME#
GTRDY#
GSTOP#
PCI_PME#
GPAR
GAD15
GAD13
GAD11
GAD9
GC/BE#0
ADSTB#0
GAD6
GAD4
GAD2
GAD0
CONN_AGPREF
PIRQ#B
AGP3V66
GREQ#
ST0
ST2
RBF#
SBA0
SBA2
SBSTB
SBA4
SBA6
GAD31
GAD29
GAD27
GAD25
ADSTB1
GAD23
GAD21
GAD19
GAD17
GC/BE#2
GIRDY#
GDEVSEL#
GPERR#
GSERR#
GC/BE#1
GAD14
GAD12
GAD10
GAD8
ADSTB0
GAD7
GAD5
GAD3
GAD1
GMCH_AGPREF
R150
R151
301-1%
200-0603
Q18
NDS7002A-S-SOT23
RN30
RN29
8.2K-0604
R168
R169
R173
R172
WBF#
SBSTB
ADSTB0
ADSTB1
8.2K-0603
R170
R171
R174
BC252
BC250
BC251
BC225
EC35
1000u/6.3v
Q48
IRLR3303-S-TO252
R737
1K-0603
BC229
R738
2.55K-1%
BC228
C144
BC219
EC50
EC54
C145
0.01u-0603
VR5
LCSK-1.SOT23-3L-100mA
Vref=1.24V
BC227
R739
10K-1%
Q40
R741
2.2K-0603
NDS7002A-S-SOT23
R740
10K-0603
TYPEDET#
EC30
BC86
BC87
BC90
BC66
MSI
AGP SLOT
MS-6315-5.0
Rev 1.0
Friday, August 17, 2001
Sheet 10 of 34

Video Connector

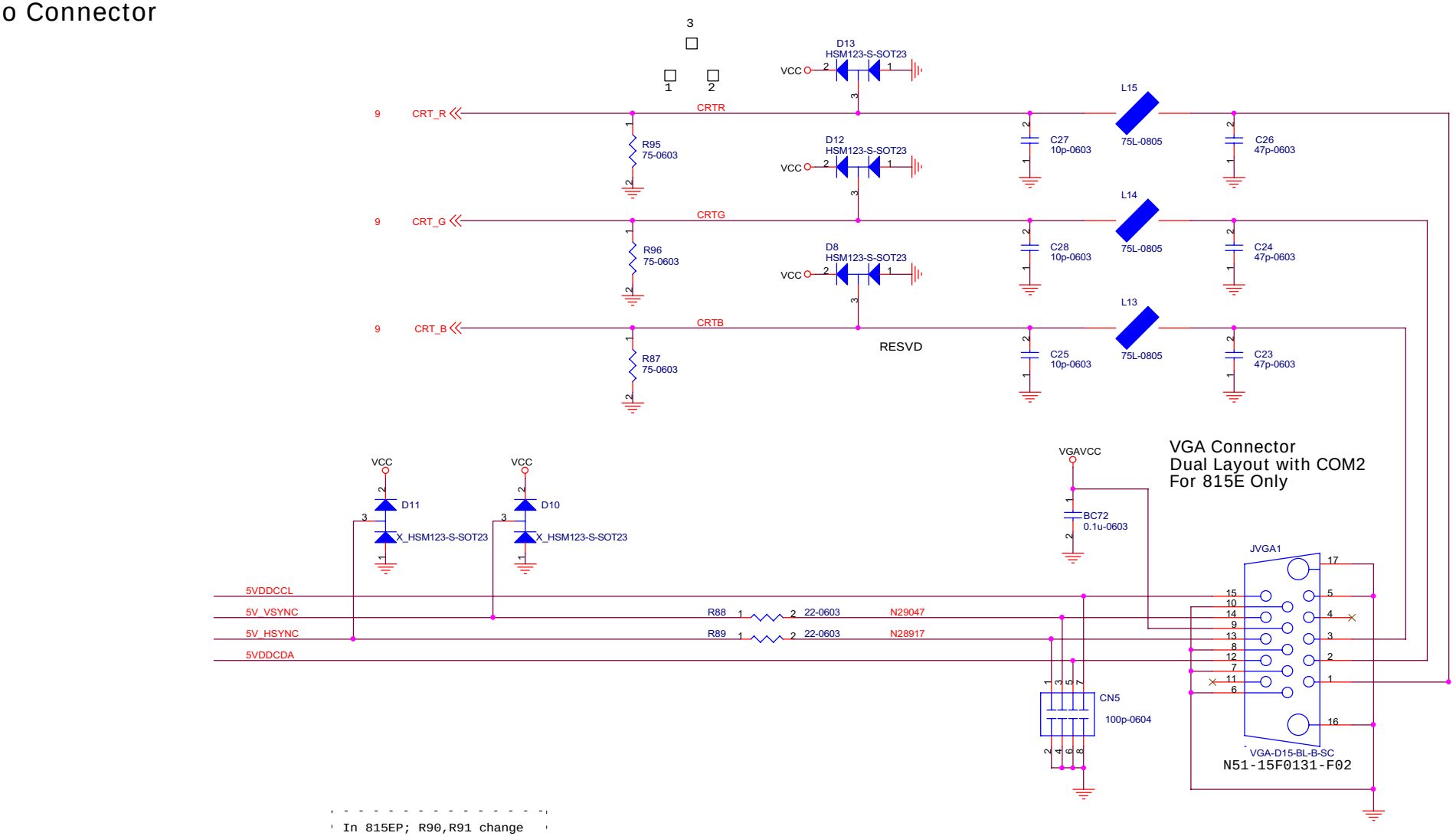

Title	VGA CONNECTOR		
Size	Document Number	MS-6315-5.0	Rev 1.0
Date: Friday, August 17, 2001	Sheet 11 of 34		

DIMM1

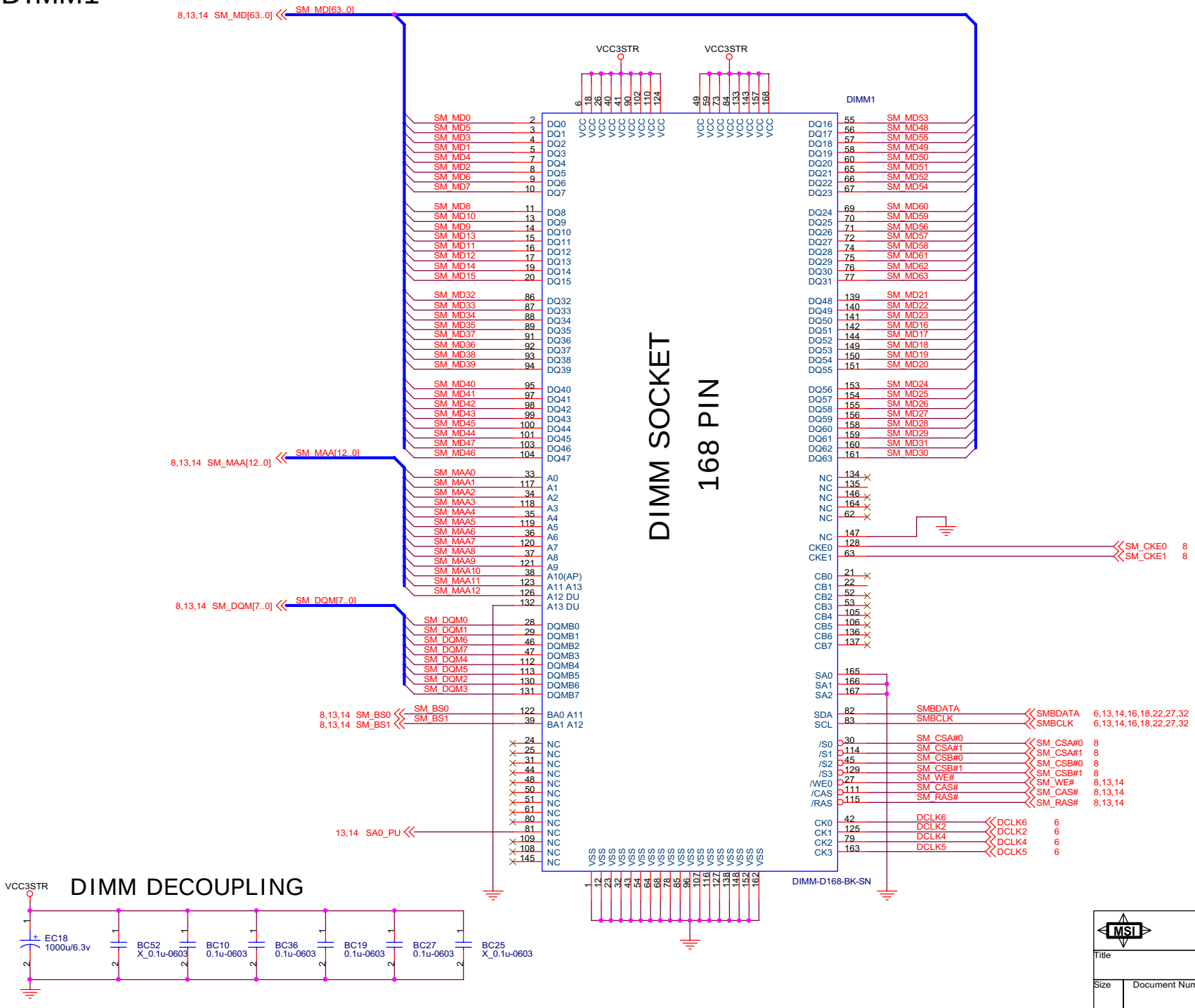

DIMM DECOUPLING

Title	DIMM1	
Size	Document Number MS-6315-5.0	Rev 1.0
Date: Friday, August 17, 2001	Sheet 12 of 34	

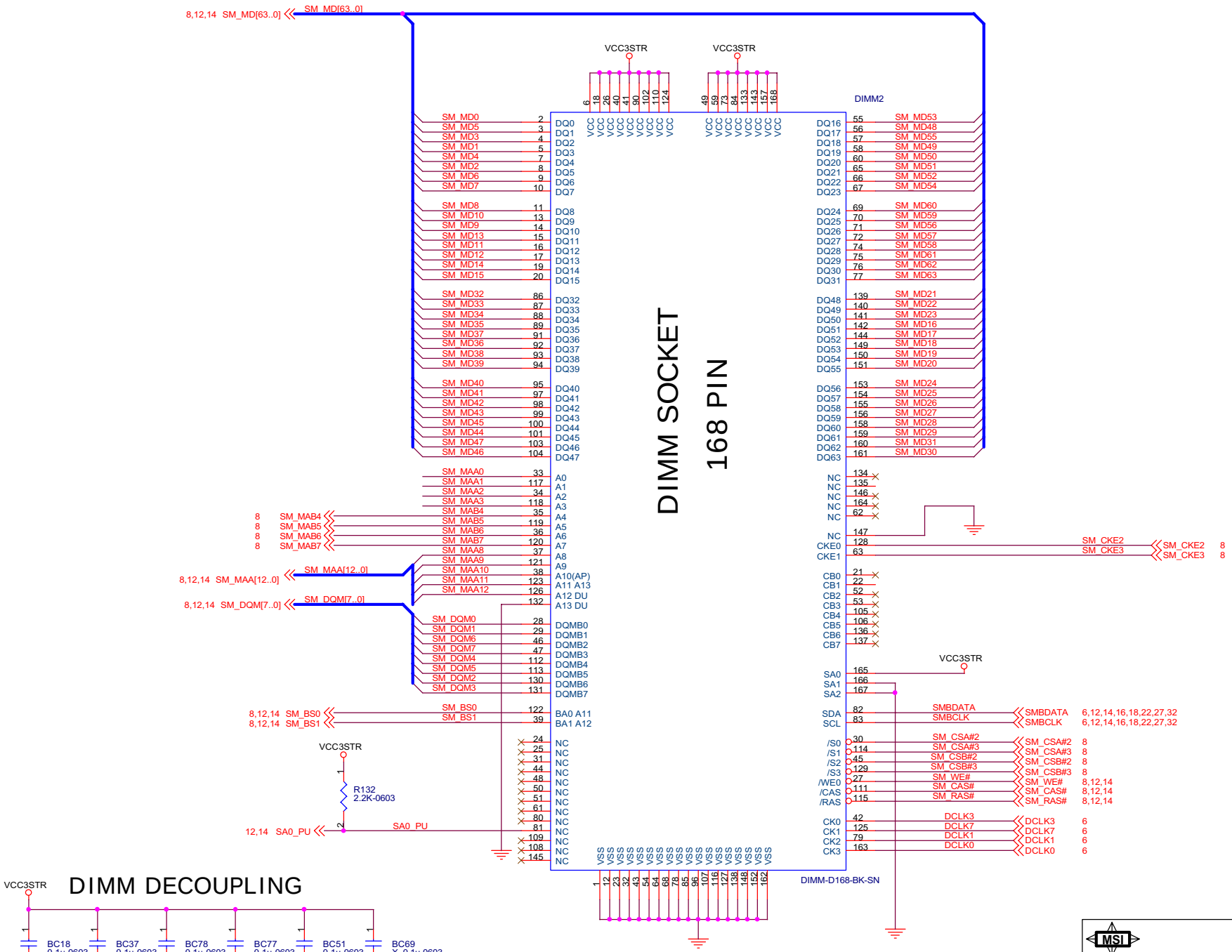
8,12,14 SM_MD[63..0]
SM_MD[63..0]
VCC3STR
VCC3STR
DIMM2
DIMM SOCKET
168 PIN
SM_MD0 SM_MD5 SM_MD3 SM_MD1 SM_MD4 SM_MD2 SM_MD6 SM_MD7
SM_MD8 SM_MD10 SM_MD9 SM_MD13 SM_MD11 SM_MD12 SM_MD14 SM_MD15
SM_MD32 SM_MD33 SM_MD34 SM_MD35 SM_MD37 SM_MD36 SM_MD38 SM_MD39
SM_MD40 SM_MD41 SM_MD42 SM_MD43 SM_MD45 SM_MD44 SM_MD47 SM_MD46
SM_MD53 SM_MD48 SM_MD55 SM_MD49 SM_MD50 SM_MD51 SM_MD52 SM_MD54
SM_MD60 SM_MD59 SM_MD56 SM_MD57 SM_MD58 SM_MD61 SM_MD62 SM_MD63
SM_MD21 SM_MD22 SM_MD23 SM_MD16 SM_MD17 SM_MD18 SM_MD19 SM_MD20
SM_MD24 SM_MD25 SM_MD26 SM_MD27 SM_MD28 SM_MD29 SM_MD31 SM_MD30
SM_MAA0 SM_MAA1 SM_MAA2 SM_MAA3 SM_MAB4 SM_MAB5 SM_MAB6 SM_MAB7 SM_MAA8 SM_MAA9 SM_MAA10 SM_MAA11 SM_MAA12
8 SM_MAB4
8 SM_MAB5
8 SM_MAB6
8 SM_MAB7
SM_MAA[12..0]
8,12,14 SM_MAA[12..0]
SM_DQM[7..0]
8,12,14 SM_DQM[7..0]
SM_DQM0 SM_DQM1 SM_DQM6 SM_DQM7 SM_DQM4 SM_DQM5 SM_DQM2 SM_DQM3
SM_BS0 SM_BS1
8,12,14 SM_BS0
8,12,14 SM_BS1
NC
SM_CKE2 SM_CKE3
SM_CKE2 8
SM_CKE3 8
VCC3STR
SMBDATA SMBCLK
SMBDATA 6,12,14,16,18,22,27,32
SMBCLK 6,12,14,16,18,22,27,32
SM_CSA#2 SM_CSA#3 SM_CSB#2 SM_CSB#3 SM_WE# SM_CAS# SM_RAS#
SM_CSA#2 8
SM_CSA#3 8
SM_CSB#2 8
SM_CSB#3 8
SM_WE# 8,12,14
SM_CAS# 8,12,14
SM_RAS# 8,12,14
DCLK3 DCLK7 DCLK1 DCLK0
DCLK3 6
DCLK7 6
DCLK1 6
DCLK0 6
VCC3STR
R132
2.2K-0603
12,14 SA0_PU
SA0_PU
DIMM-D168-BK-SN
VCC3STR
DIMM DECOUPLING
BC18 0.1u-0603
BC37 0.1u-0603
BC78 0.1u-0603
BC77 0.1u-0603
BC51 0.1u-0603
BC69 X_0.1u-0603
MSI
Title
DIMM2
Size
Document Number
MS-6315-5.0
Rev
1.0
Date: Friday, August 17, 2001
Sheet 13 of 34

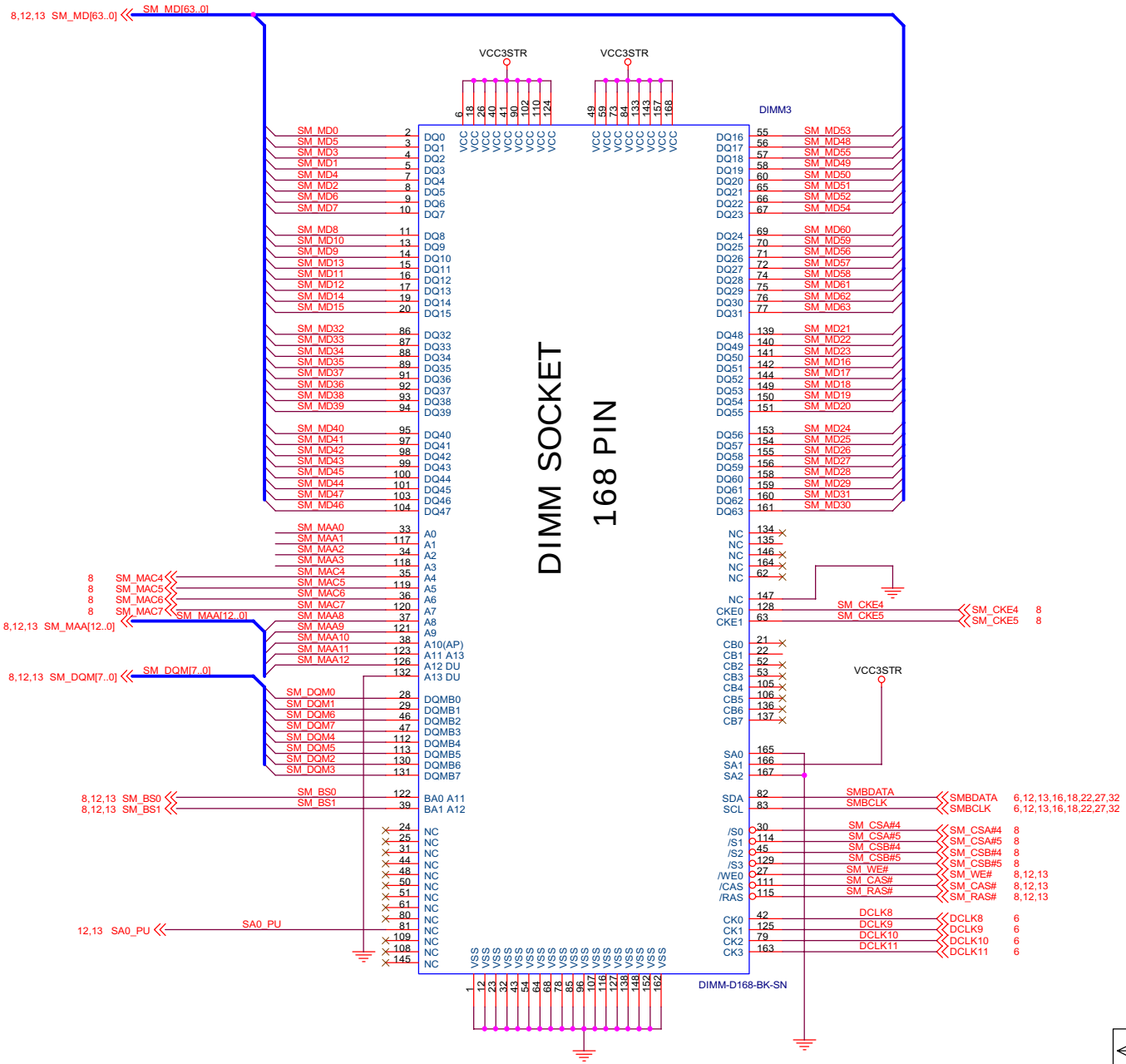

MSI		
Title	DIMM3	
Size	Document Number MS-6315-5.0	Rev 1.0
Date: Friday, August 17, 2001	Sheet 14 of 34	

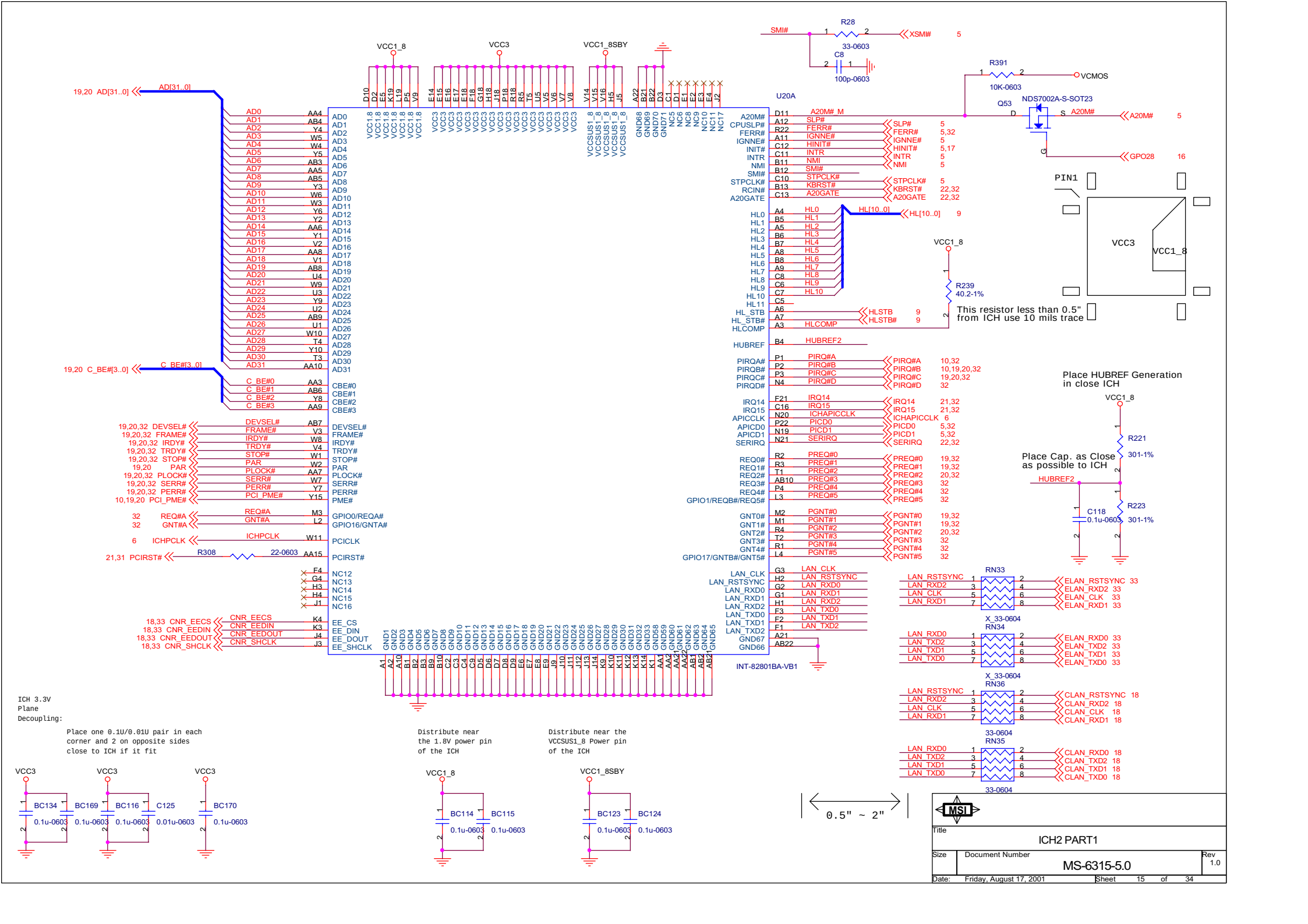
U20A
INT-82801BA-VB1
R28
33-0603
C8
100p-0603
R391
10K-0603
VCMOS
Q53
NDS7002A-S-SOT23
R239
40.2-1%
This resistor less than 0.5" from ICH use 10 mils trace
PIN1
VCC3
VCC1_8
Place HUBREF Generation in close ICH
Place Cap. as Close as possible to ICH
R221
301-1%
R223
301-1%
C118
0.1u-0603
HUBREF2
RN33
RN34
RN36
RN35
X_33-0604
33-0604
R308
22-0603
ICH 3.3V Plane Decoupling:
Place one 0.1U/0.01U pair in each corner and 2 on opposite sides close to ICH if it fit
Distribute near the 1.8V power pin of the ICH
Distribute near the VCCSUS1_8 Power pin of the ICH
BC134
BC169
BC116
C125
BC170
BC114
BC115
BC123
BC124
0.5" ~ 2"
Title
ICH2 PART1
Size
Document Number
MS-6315-5.0
Rev
1.0
Date: Friday, August 17, 2001
Sheet 15 of 34

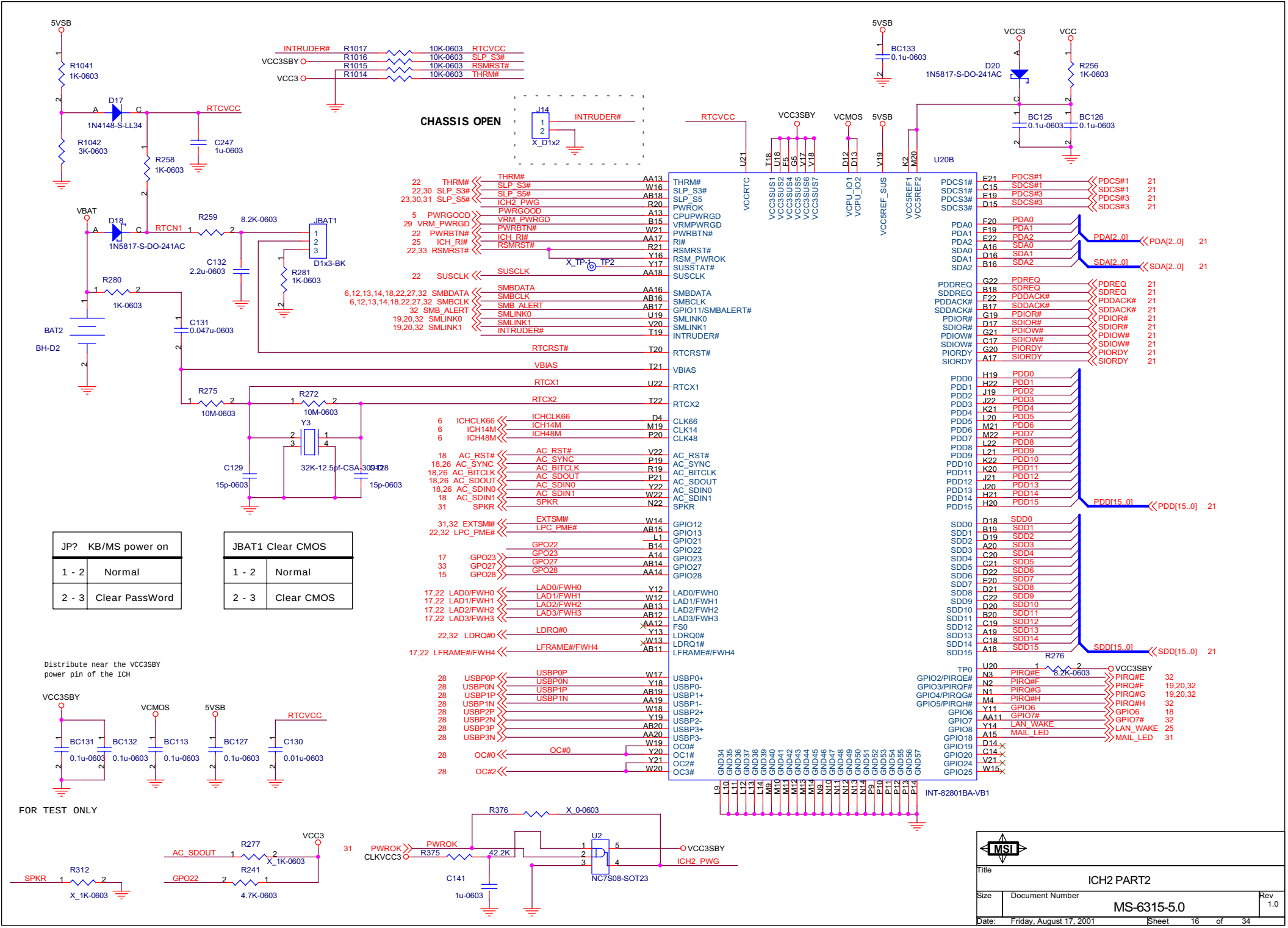
5VSB
R1041 1K-0603
R1042 3K-0603
D17 1N4148-S-LL34
RTCVCC
C247 1u-0603
R258 1K-0603
VBAT
D18 1N5817-S-DO-241AC
RTCN1
R259 8.2K-0603
JBAT1
D1x3-BK
R281 1K-0603
C132 2.2u-0603
R280 1K
BAT2
BH-D2
C131 0.047u-0603
R275 10M-0603
R272 10M-0603
Y3 32K-12.5pf-CSA-3094128
C129 15p-0603
15p-0603
INTRUDER# R1017 10K-0603 RTCVCC
R1016 10K-0603 SLP_S3#
VCC3SBY R1015 10K-0603 RSMRST#
VCC3 R1014 10K-0603 THRM#
CHASSIS OPEN
J14 X_D1x2
INTRUDER#
5VSB BC133 0.1u-0603
VCC3 VCC
D20 1N5817-S-DO-241AC
R256 1K-0603
BC125 0.1u-0603
BC126 0.1u-0603
RTCVCC
VCC3SBY
VCMOS
5VSB
U21
U18
U19
F5
G5
V7
V18
D12
D13
V19
K2
M20
U20B
THRM# AA13
SLP_S3# W16
SLP_S5# AB18
PWROK R20
PWRGOOD A13
VRMPWRGD B15
PWRBTN# W21
RI# AA17
RSMRST# R21
Y16
Y17
SUSSTAT# AA18
SUSCLK
SMBDATA AA16
SMBCLK AB16
GPIO11/SMBALERT# AB17
SMLINK0 U19
SMLINK1 V20
INTRUDER# T19
RTCRST# T20
VBIAS T21
RTCX1 U22
RTCX2 T22
CLK66 D4
CLK14 M19
CLK48 P20
AC_RST# V22
AC_SYNC P19
AC_BITCLK R19
AC_SDOUT P21
AC_SDIN0 Y22
AC_SDIN1 W22
SPKR N22
GPIO12 W14
GPIO13 AB15
GPIO21 L1
GPIO22 B14
GPIO23 A14
GPIO27 AB14
GPIO28 AA14
LAD0/FWH0 Y12
LAD1/FWH1 W12
LAD2/FWH2 AB13
LAD3/FWH3 AB12
FS0 AA12
LDRQ0# Y13
LDRQ1# W13
LFRAME#/FWH4 AB11
USBP0+ W17
USBP0- Y18
USBP1+ AB19
USBP1- AA19
USBP2+ W18
USBP2- Y19
USBP3+ AB20
USBP3- AA20
OC0# W19
OC1# Y20
OC2# Y21
OC3# W20
GND34 GND35 GND36 GND37 GND38 GND39 GND40 GND41 GND42 GND43 GND44 GND45 GND46 GND47 GND48 GND49 GND50 GND51 GND52 GND53 GND54 GND55 GND56 GND57
L9 L10 L11 L12 L13 L14 M9 M10 M11 M12 M13 M14 N9 N10 N11 N12 N13 N14 P9 P10 P11 P12 P13 P14
INT-82801BA-VB1
PDCS1# E21
SDCS1# C15
PDCS3# E19
SDCS3# D15
PDA0 F20
PDA1 F19
PDA2 E22
SDA0 A16
SDA1 D16
SDA2 B16
PDREQ G22
SDREQ B18
PDDACK# F22
SDDACK# B17
PDIOR# G19
SDIOR# D17
PDIOW# G21
SDIOW# C17
PIORDY G20
SIORDY A17
PDD0 H19
PDD1 H22
PDD2 J19
PDD3 J22
PDD4 K21
PDD5 L20
PDD6 M21
PDD7 M22
PDD8 L22
PDD9 L21
PDD10 K22
PDD11 K20
PDD12 J21
PDD13 J20
PDD14 H21
PDD15 H20
SDD0 D18
SDD1 B19
SDD2 D19
SDD3 A20
SDD4 C20
SDD5 C21
SDD6 D22
SDD7 E20
SDD8 D21
SDD9 C22
SDD10 D20
SDD11 B20
SDD12 C19
SDD13 A19
SDD14 C18
SDD15 A18
R276 8.2K-0603
U20
TP0
GPIO2/PIRQE# N3
GPIO3/PIRQF# N2
GPIO4/PIRQG# N1
GPIO5/PIRQH# M4
GPIO6 Y11
GPIO7 AA11
GPIO8 Y14
GPIO18 A15
GPIO19 D14
GPIO20 C14
GPIO24 V21
GPIO25 W15
PIRQ#E
PIRQ#F
PIRQ#G
PIRQ#H
GPIO6
GPIO7#
LAN_WAKE
MAIL_LED
VCC3SBY
PDCS#1 21
SDCS#1 21
PDCS#3 21
SDCS#3 21
PDA[2..0] 21
SDA[2..0] 21
PDREQ 21
SDREQ 21
PDDACK# 21
SDDACK# 21
PDIOR# 21
SDIOR# 21
PDIOW# 21
SDIOW# 21
PIORDY 21
SIORDY 21
PDD[15..0] 21
SDD[15..0] 21
PIRQ#E 32
PIRQ#F 19,20,32
PIRQ#G 19,20,32
PIRQ#H 32
GPIO6 18
GPIO7# 32
LAN_WAKE 25
MAIL_LED 31
JP? KB/MS power on
1 - 2 Normal
2 - 3 Clear PassWord
JBAT1 Clear CMOS
1 - 2 Normal
2 - 3 Clear CMOS
Distribute near the VCC3SBY power pin of the ICH
VCC3SBY
VCMOS
5VSB
RTCVCC
BC131 0.1u-0603
BC132 0.1u-0603
BC113 0.1u-0603
BC127 0.1u-0603
C130 0.01u-0603
FOR TEST ONLY
R312 X_1K-0603
SPKR
R277 X_1K-0603
AC_SDOUT
R241 4.7K-0603
GPO22
VCC3
R376 X_0-0603
PWROK
CLKVCC3
R375 42.2K
C141 1u-0603
U2 NC7S08-SOT23
VCC3SBY
ICH2_PWG
MSI
Title
ICH2 PART2
Size
Document Number
MS-6315-5.0
Rev 1.0
Date: Friday, August 17, 2001
Sheet 16 of 34

Firware Hub (FWH)

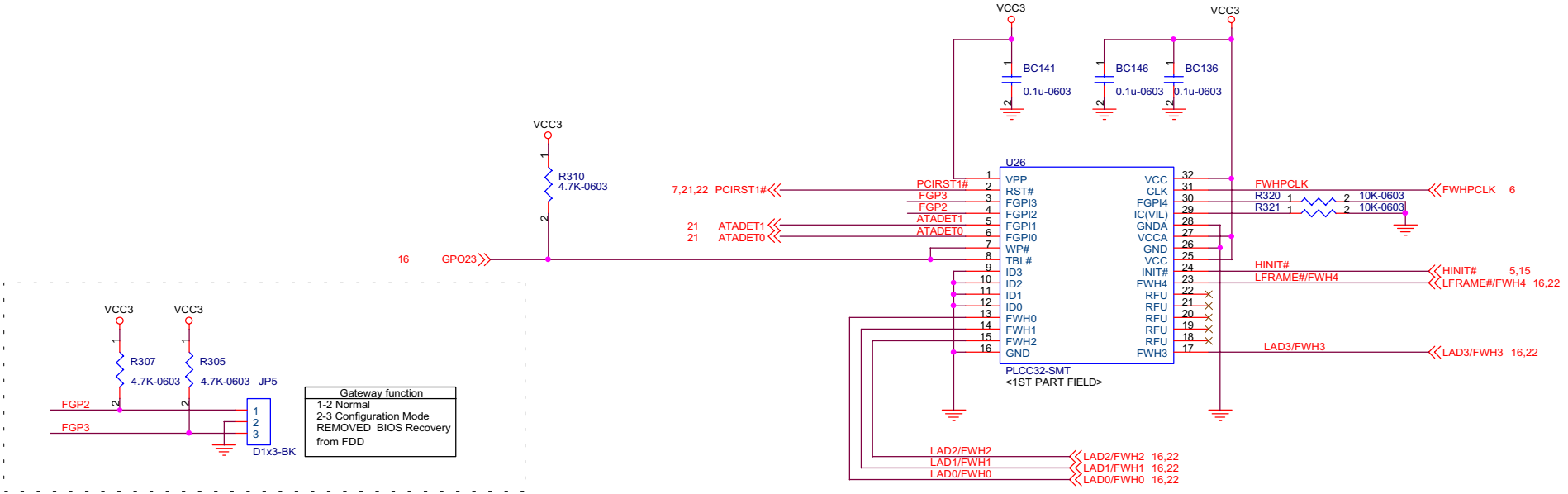

OPTION

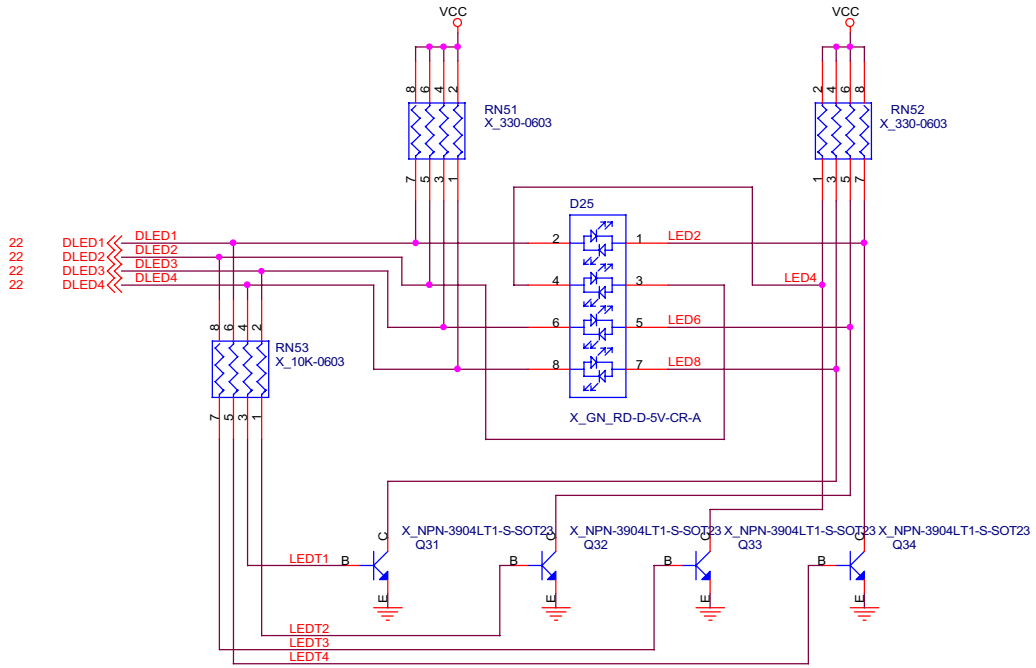

Title	FIWARE HUB	
Size	Document Number MS-6315-5.0	Rev 1.0
Date: Friday, August 17, 2001	Sheet 17 of 34	

CNR RISER

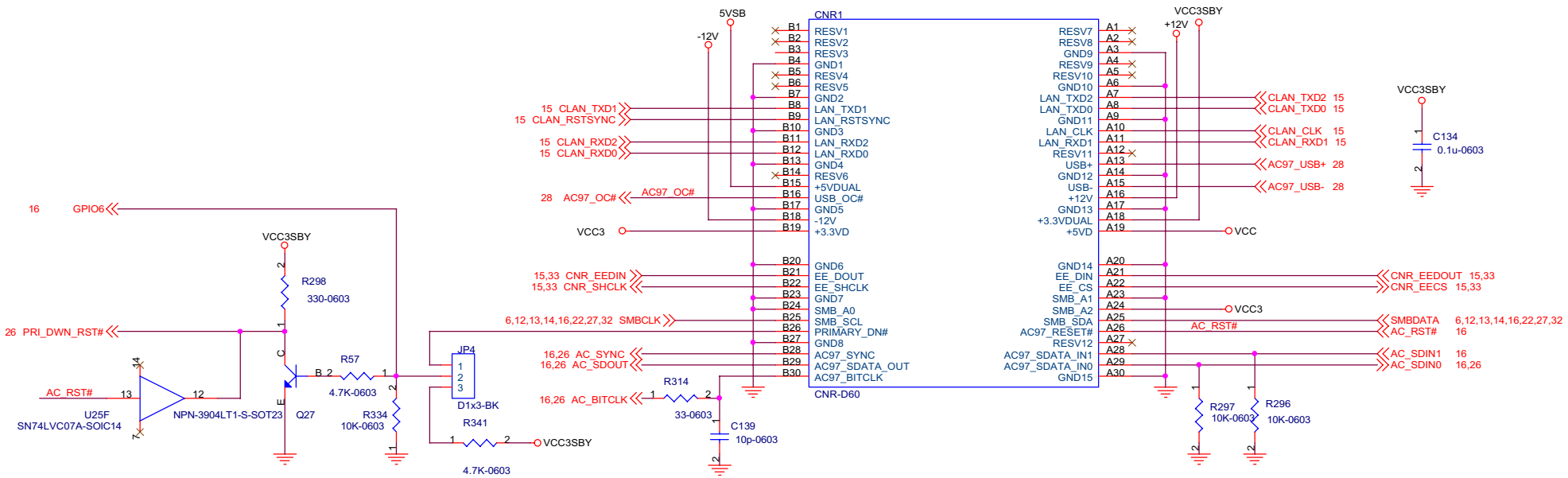

Title	CNR	
Size	Document Number MS-6315-5.0	Rev 1.0
Date: Friday, August 17, 2001	Sheet 18 of 34	

PCI Connectors

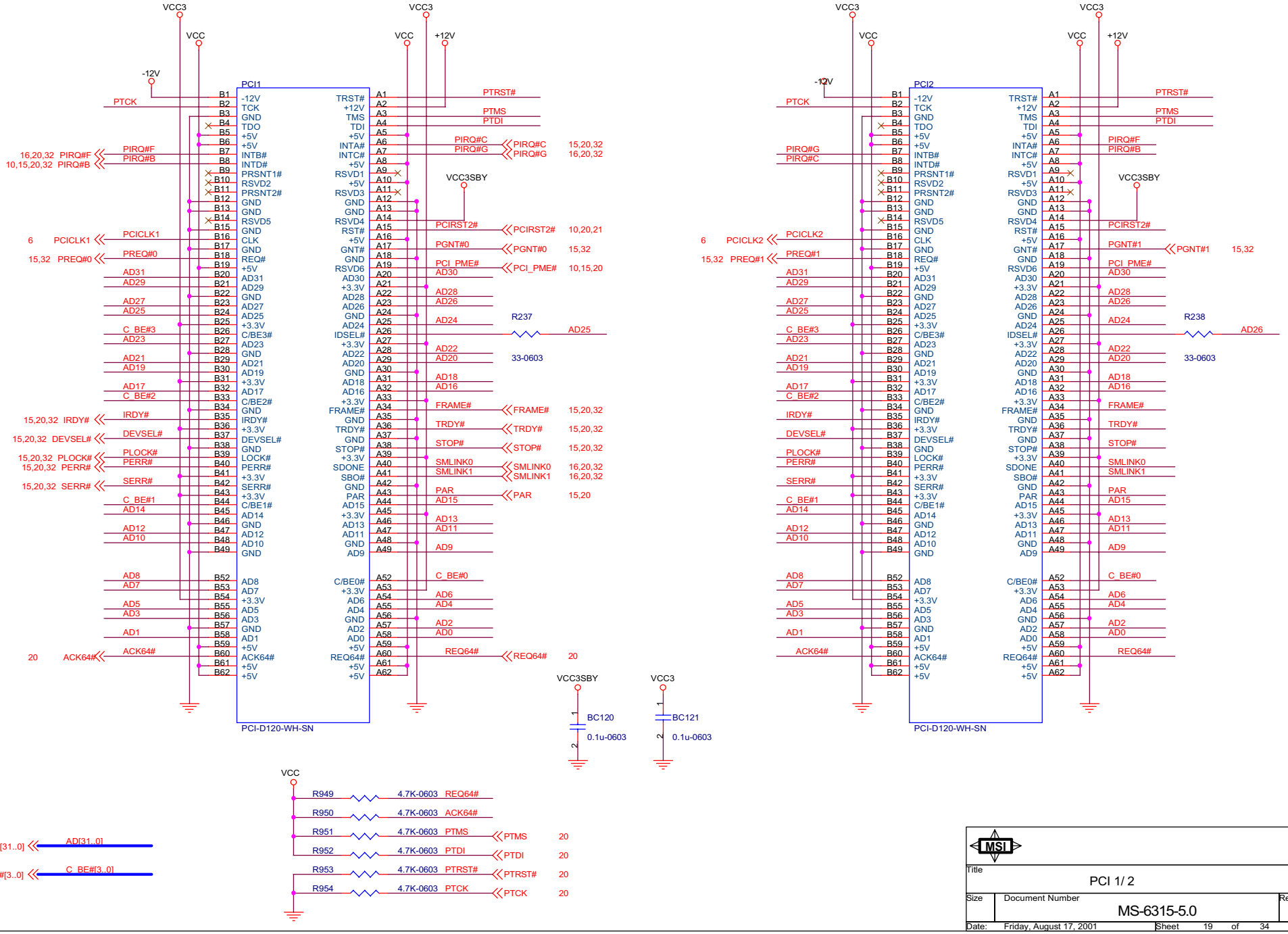

MSI

Title	PCI 1/ 2	
Size	Document Number MS-6315-5.0	Rev 1.0
Date: Friday, August 17, 2001	Sheet 19 of 34	

PCI Slot

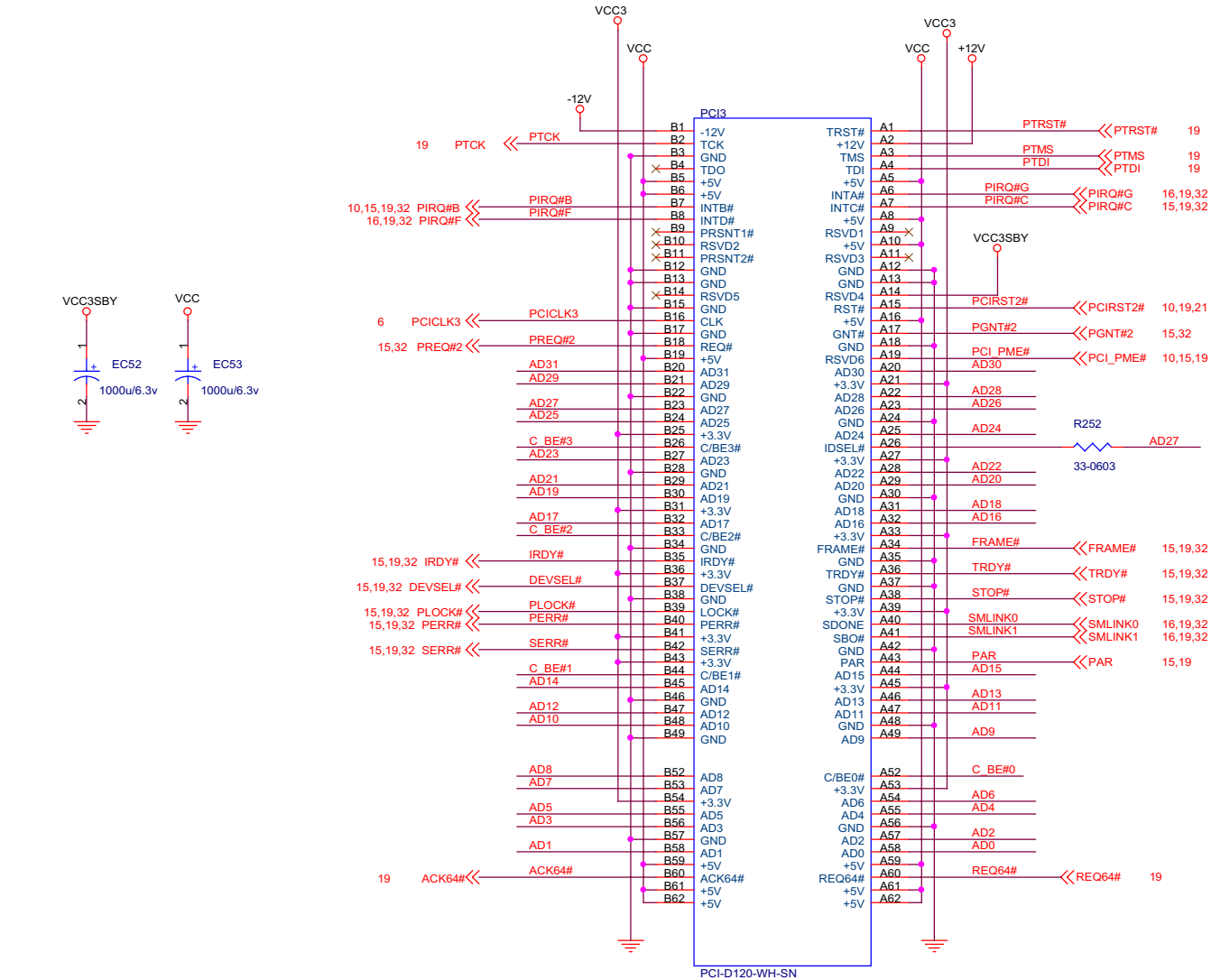

15,19 AD[31..0] AD[31..0]

15,19 C_BE#[3..0] C_BE#[3..0]

MSI

Title: PCI3

Size	Document Number	Rev
	MS-6315-5.0	1.0

Date: Friday, August 17, 2001 Sheet 20 of 34

ATA100 IDE CONNECTORS

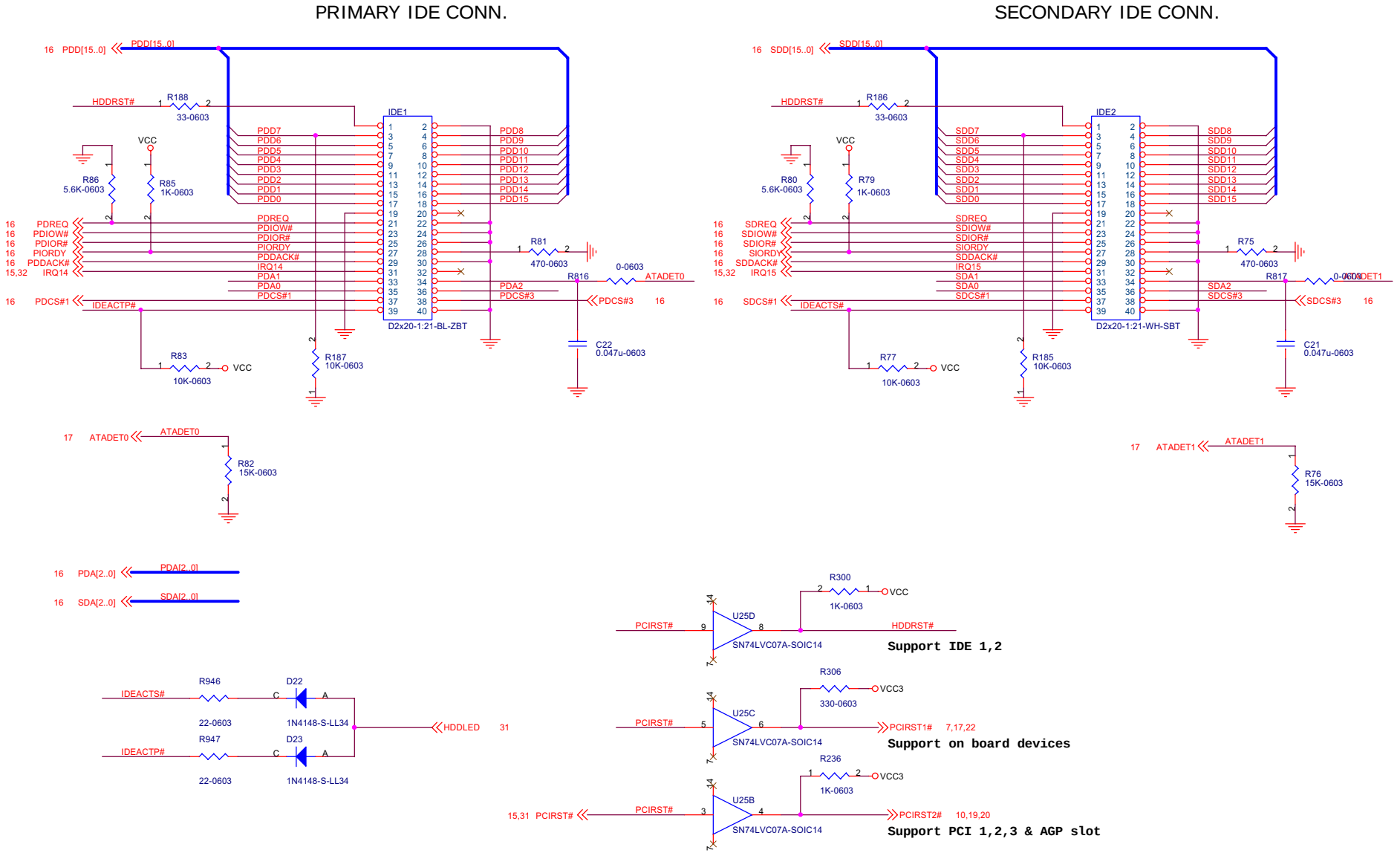

Title	ATA 100 IDE CONNECTOR	
Size	Document Number: MS-6315-5.0	Rev: 1.0
Date: Friday, August 17, 2001	Sheet 21 of 34	

Super I/O

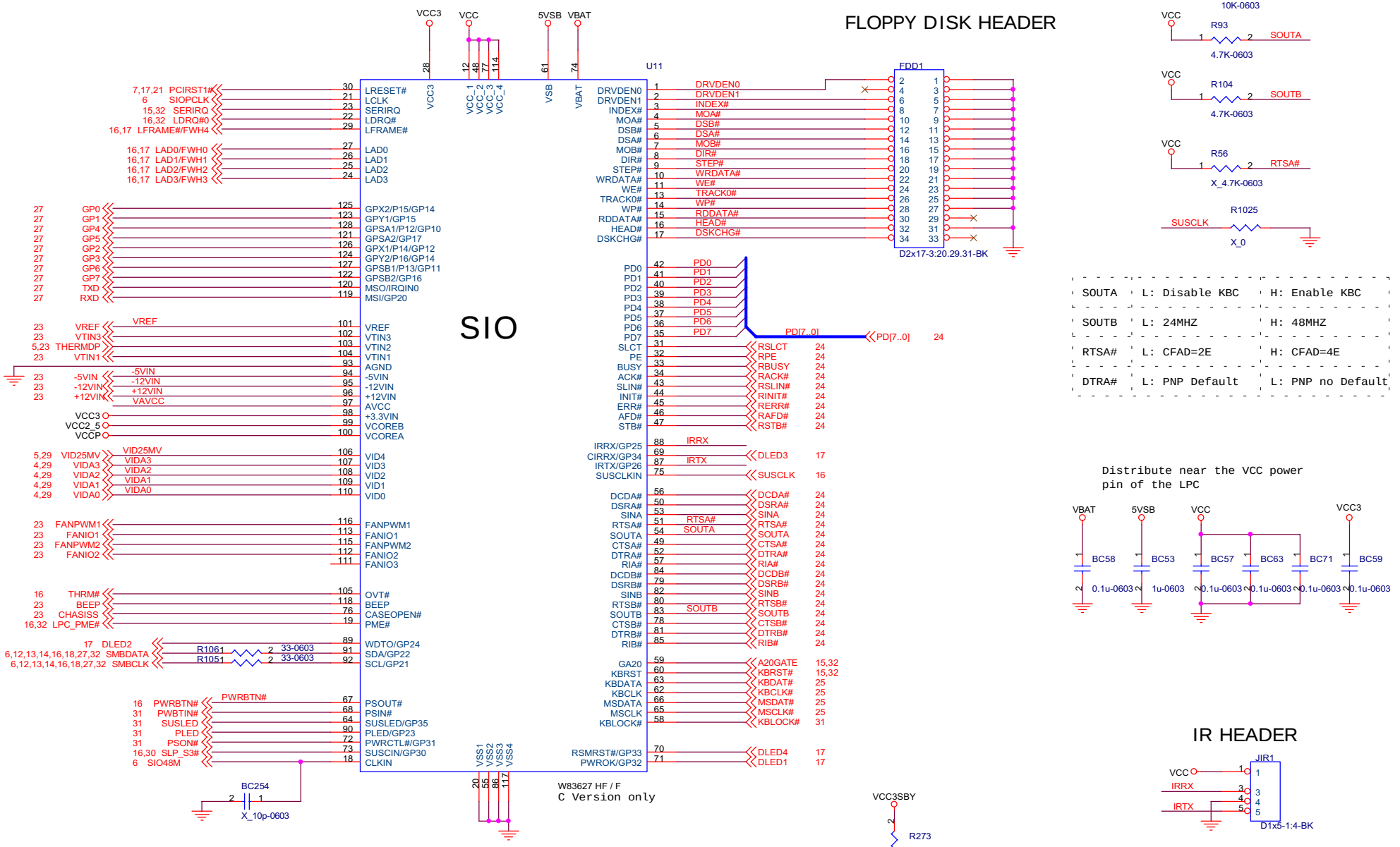

Title	LPC I/O
Size	Document Number: MS-6315-5.0
Rev	1.0
Date:	Friday, August 17, 2001
Sheet	22 of 34

Hardware Monitor

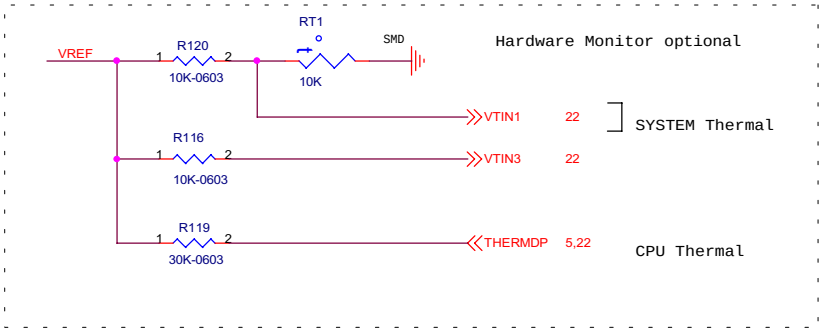

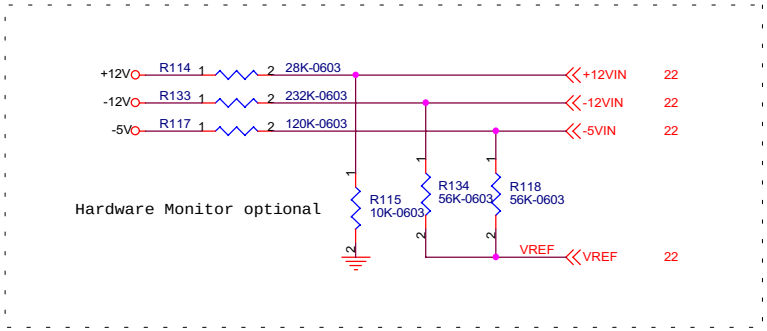

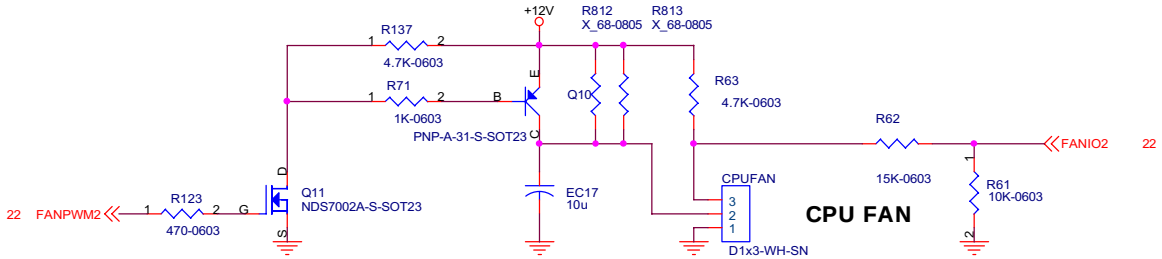

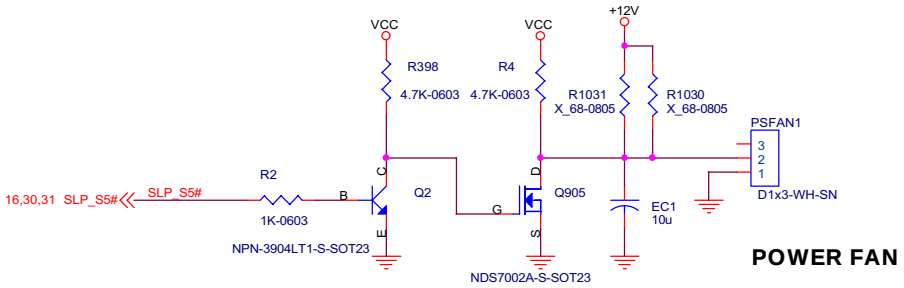

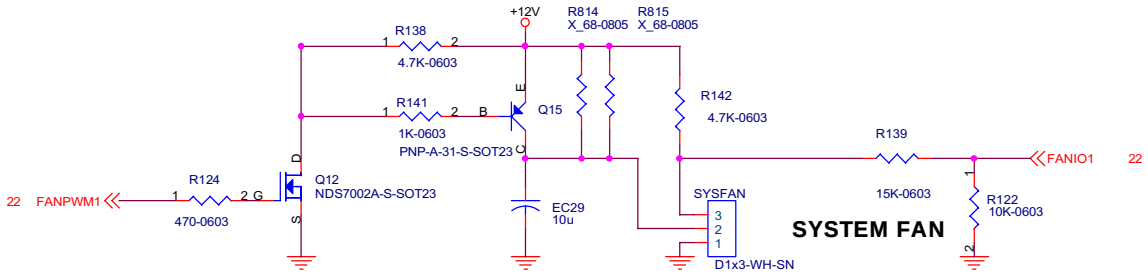

Chassis Intrusion Header

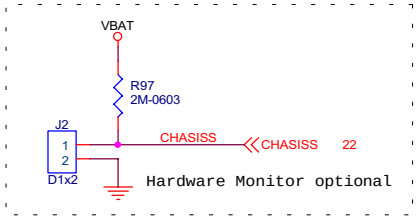

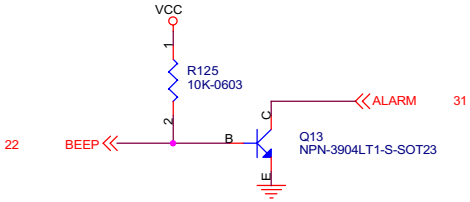

MSI

Title: FAN / H/W MONITOR

Size | Document Number: MS-6315-5.0 | Rev: 1.0

Date: Friday, August 17, 2001 | Sheet 23 of 34

Parallel Port / COM1port & COM2 Header

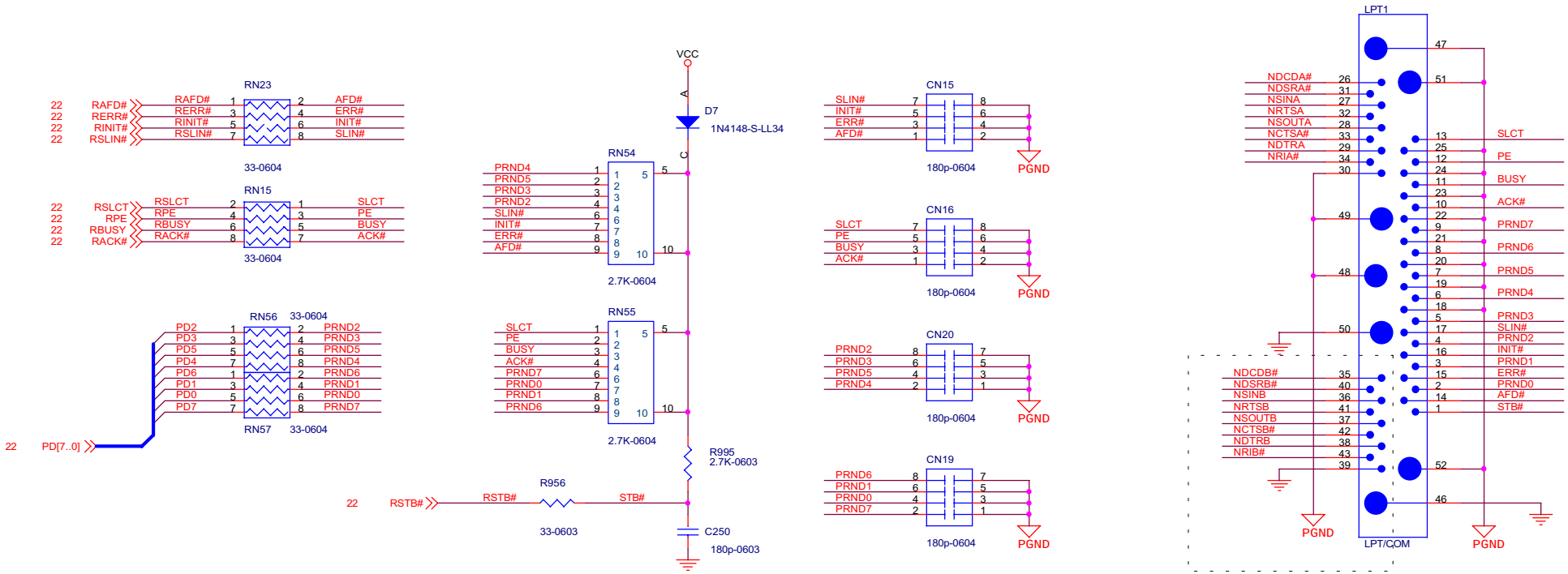

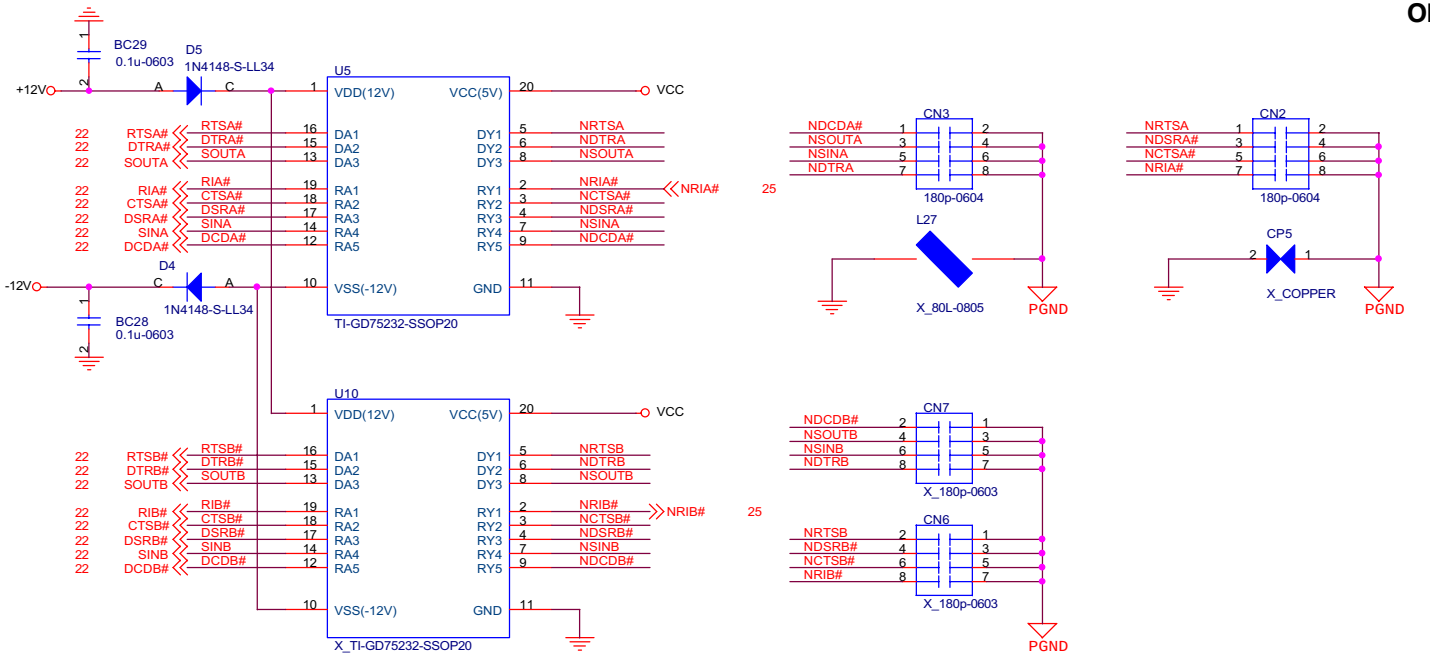

MSI		
Title	COM / LPT PORT	
Size	Document Number MS-6315-5.0	Rev 1.0
Date: Friday, August 17, 2001	Sheet 24 of 34	

KEYBOARD/MOUSE PORTS

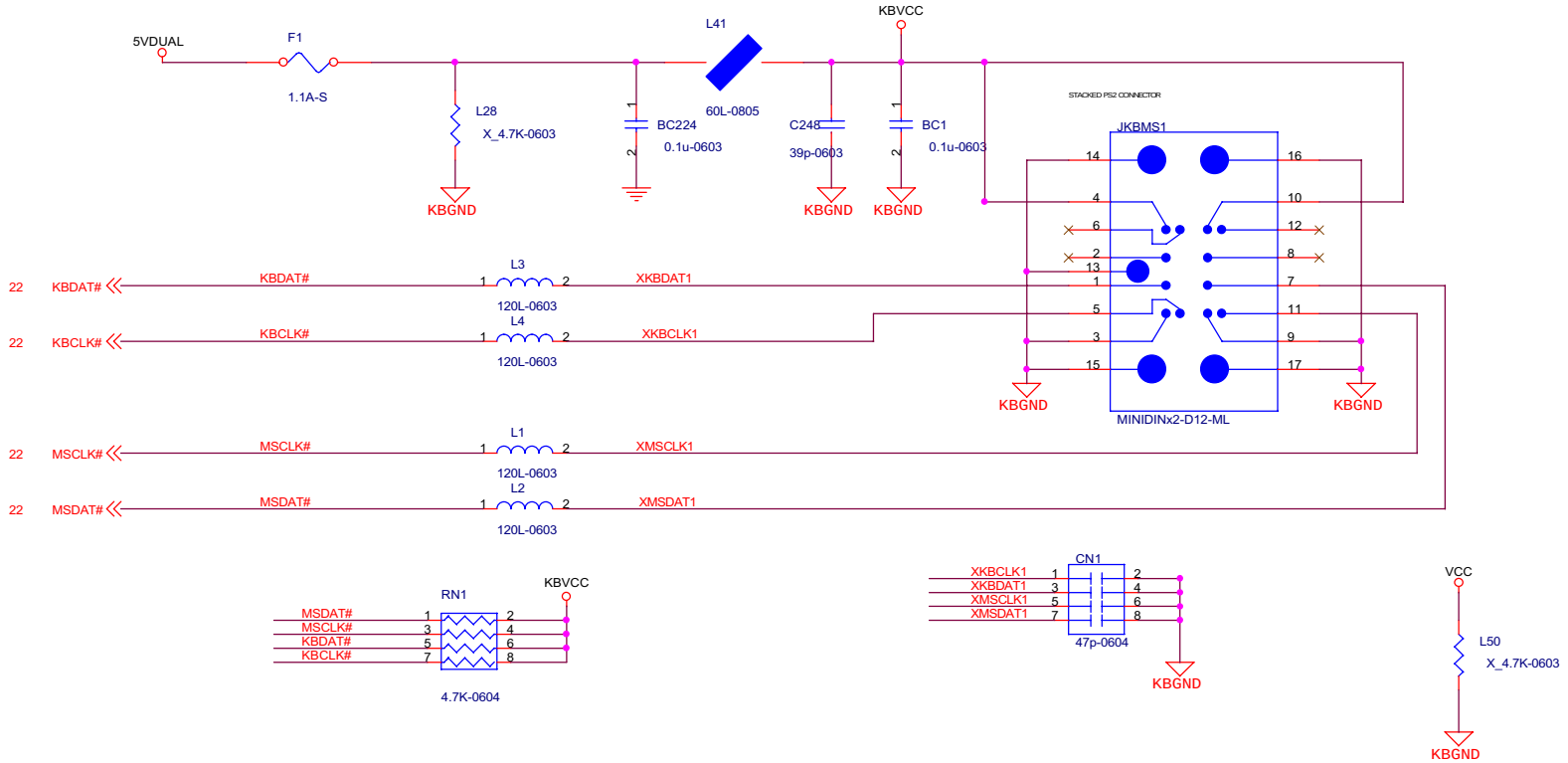

LAN WAKEUP HEADER

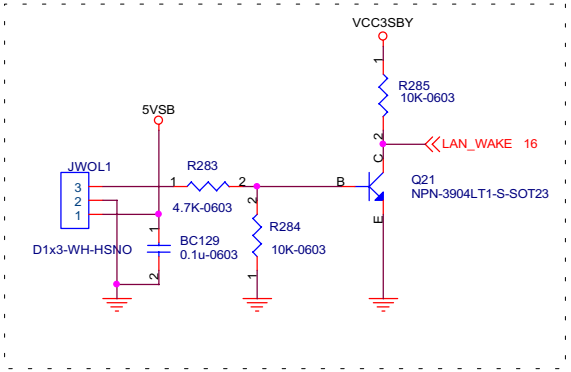

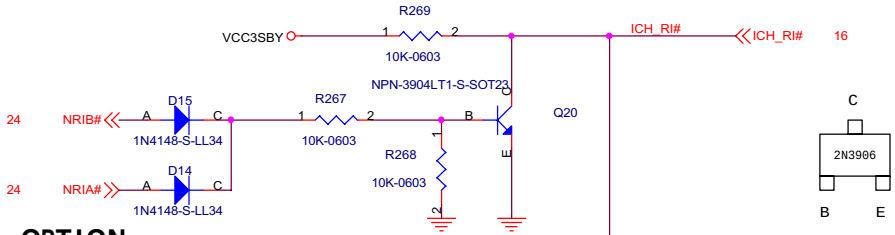

OPTION

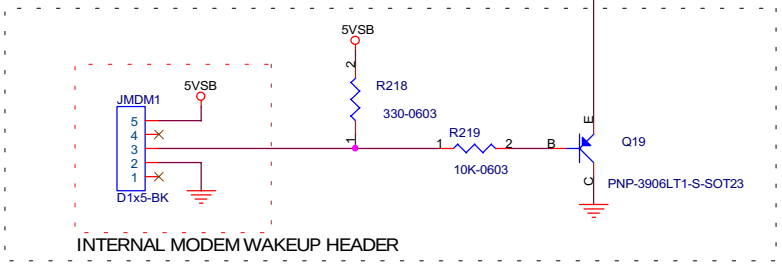

MSI

Title: PS2 PORT

Size	Document Number	Rev
	MS-6315-5.0	1.0

Date: Friday, August 17, 2001 Sheet 25 of 34

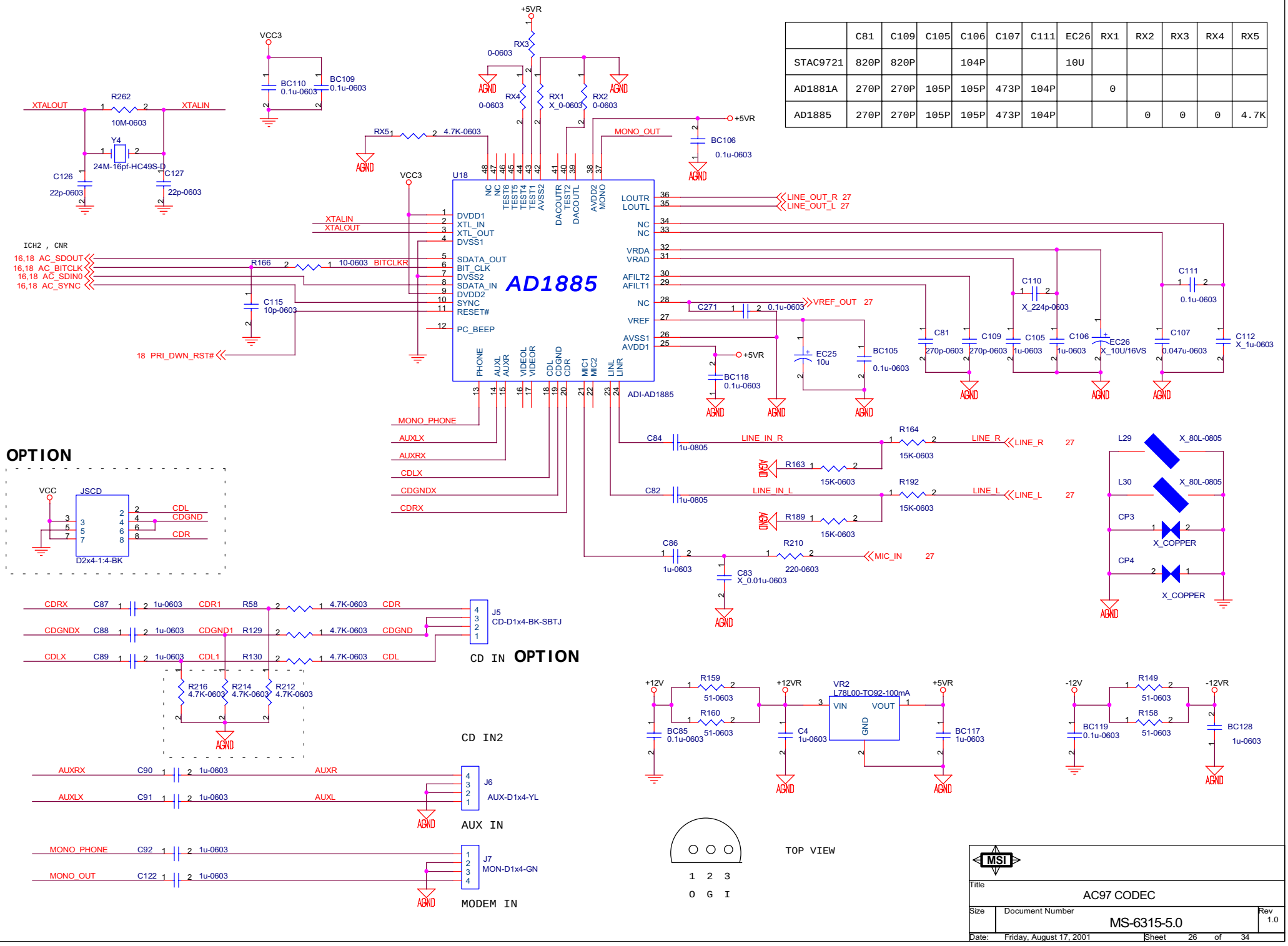

	C81	C109	C105	C106	C107	C111	EC26	RX1	RX2	RX3	RX4	RX5
STAC9721	820P	820P		104P			10U					
AD1881A	270P	270P	105P	105P	473P	104P		0				
AD1885	270P	270P	105P	105P	473P	104P			0	0	0	4.7K

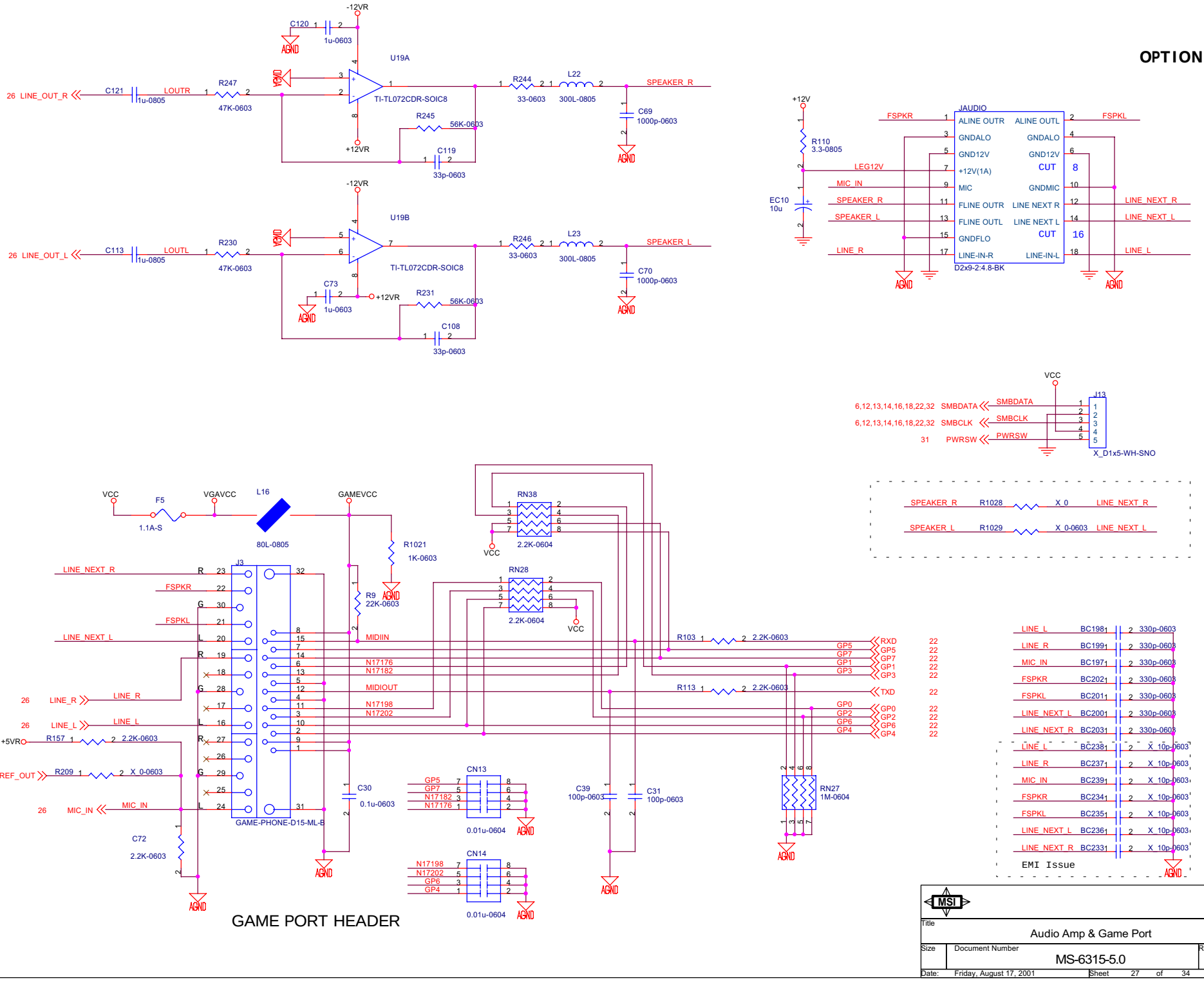
OPTION
-12VR
C120
1u-0603
AGND
U19A
VGAVGND
TI-TL072CDR-SOIC8
26 LINE_OUT_R
C121
1u-0805
LOUTR
R247
47K-0603
R244
33-0603
L22
300L-0805
SPEAKER_R
C69
1000p-0603
R245
56K-0603
+12VR
C119
33p-0603
U19B
26 LINE_OUT_L
C113
LOUTL
R230
C73
R231
C108
SPEAKER_L
C70
+12V
R110
3.3-0805
EC10
10u
JAUDIO
FSPKR
FSPKL
ALINE OUTR
ALINE OUTL
GNDALO
GND12V
+12V(1A)
CUT
8
LEG12V
MIC_IN
MIC
GNDMIC
SPEAKER_R
SPEAKER_L
FLINE OUTR
FLINE OUTL
LINE NEXT R
LINE NEXT L
16
GNDFLO
LINE_R
LINE-IN-R
LINE-IN-L
LINE_L
D2x9-2:4.8-BK
VCC
6,12,13,14,16,18,22,32 SMBDATA
6,12,13,14,16,18,22,32 SMBCLK
31 PWRSW
J13
X_D1x5-WH-SNO
VGAVCC
L16
GAMEVCC
F5
1.1A-S
80L-0805
R1021
1K-0603
RN38
2.2K-0604
RN28
R9
22K-0603
J3
LINE_NEXT_R
FSPKR
FSPKL
LINE_NEXT_L
MIDIIN
N17176
N17182
MIDIOUT
N17198
N17202
LINE_R
LINE_L
+5VR
R157
2.2K-0603
VREF_OUT
R209
X_0-0603
MIC_IN
C72
2.2K-0603
GAME-PHONE-D15-ML-B
C30
0.1u-0603
CN13
GP5
GP7
N17182
N17176
0.01u-0604
CN14
N17198
N17202
GP6
GP4
C39
100p-0603
C31
100p-0603
R103
R113
RXD
TXD
GP5
GP7
GP1
GP3
GP0
GP2
GP6
GP4
RN27
1M-0604
SPEAKER_R R1028 X_0 LINE_NEXT_R
SPEAKER_L R1029 X_0-0603 LINE_NEXT_L
LINE_L BC198 330p-0603
LINE_R BC199 330p-0603
MIC_IN BC197 330p-0603
FSPKR BC202 330p-0603
FSPKL BC201 330p-0603
LINE_NEXT_L BC200 330p-0603
LINE_NEXT_R BC203 330p-0603
LINE_L BC238 X_10p-0603
LINE_R BC237 X_10p-0603
MIC_IN BC239 X_10p-0603
FSPKR BC234 X_10p-0603
FSPKL BC235 X_10p-0603
LINE_NEXT_L BC236 X_10p-0603
LINE_NEXT_R BC233 X_10p-0603
EMI Issue
3/14 swap pin for layout
GAME PORT HEADER
MSI
Title
Audio Amp & Game Port
Size
Document Number
MS-6315-5.0
Rev
1.0
Date: Friday, August 17, 2001
Sheet 27 of 34

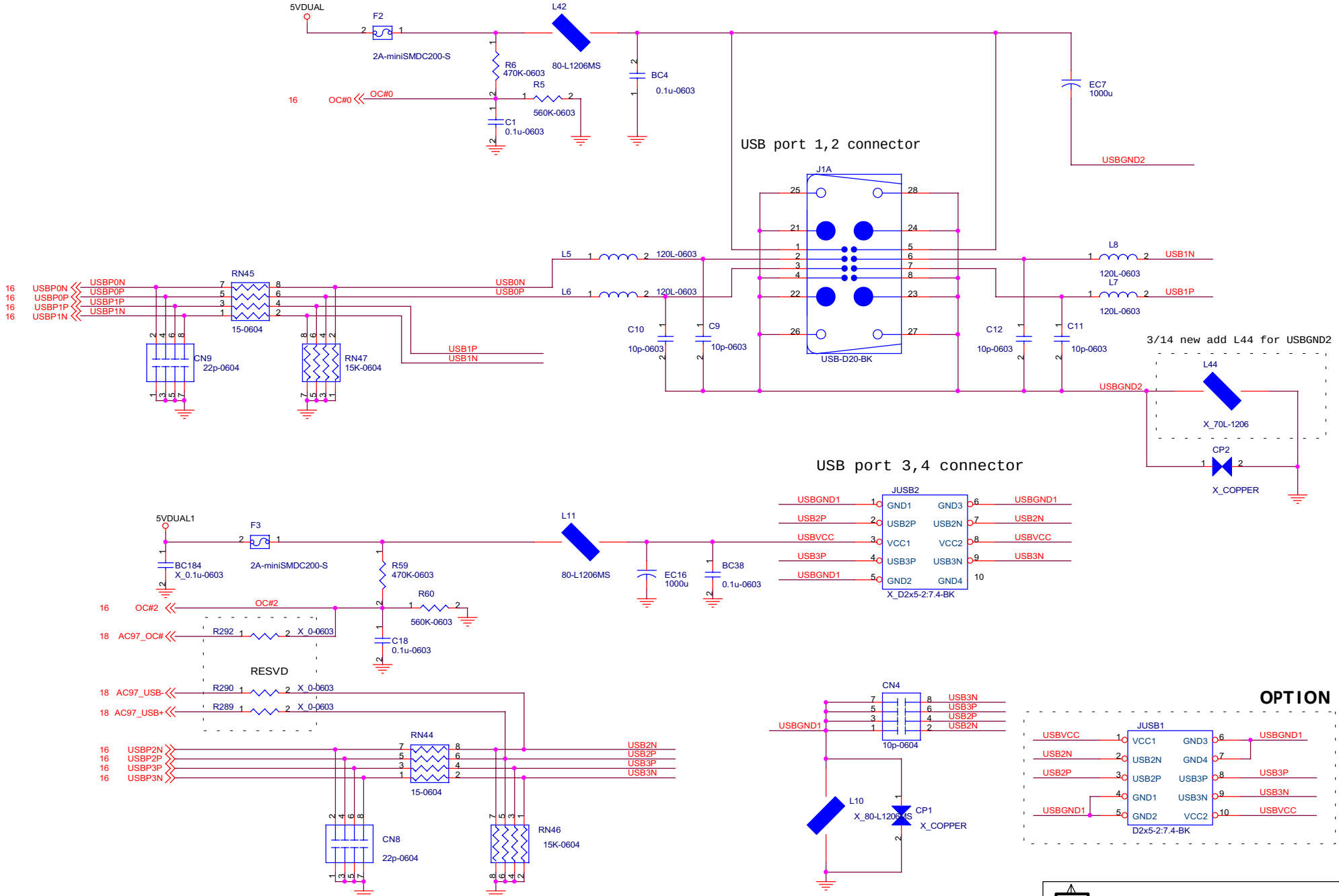
5VDUAL
F2
2A-miniSMDC200-S
L42
80-L1206MS
R6
470K-0603
R5
560K-0603
C1
0.1u-0603
BC4
0.1u-0603
EC7
1000u
USBGND2
OC#0
USB port 1,2 connector
J1A
USB-D20-BK
RN45
15-0604
CN9
22p-0604
RN47
15K-0604
USBP0N
USBP0P
USBP1P
USBP1N
USB0N
USB0P
USB1P
USB1N
L5
L6
L8
L7
120L-0603
C10
C9
C12
C11
10p-0603
3/14 new add L44 for USBGND2
L44
X_70L-1206
CP2
X_COPPER
USB port 3,4 connector
JUSB2
X_D2x5-2:7.4-BK
5VDUAL1
F3
2A-miniSMDC200-S
L11
80-L1206MS
BC184
X_0.1u-0603
EC16
1000u
BC38
0.1u-0603
R59
470K-0603
R60
560K-0603
C18
0.1u-0603
OC#2
AC97_OC#
R292
X_0-0603
RESVD
AC97_USB-
AC97_USB+
R290
R289
RN44
CN8
22p-0604
RN46
15K-0604
USBP2N
USBP2P
USBP3N
USBP3P
USB2N
USB2P
USB3N
USB3P
CN4
10p-0604
L10
X_80-L1206MS
CP1
X_COPPER
OPTION
JUSB1
D2x5-2:7.4-BK
USBVCC
USBGND1
MSI
Title
USB PORT
Size
Document Number
MS-6315-5.0
Rev
1.0
Date: Friday, August 17, 2001
Sheet 28 of 34

VRM 8.5

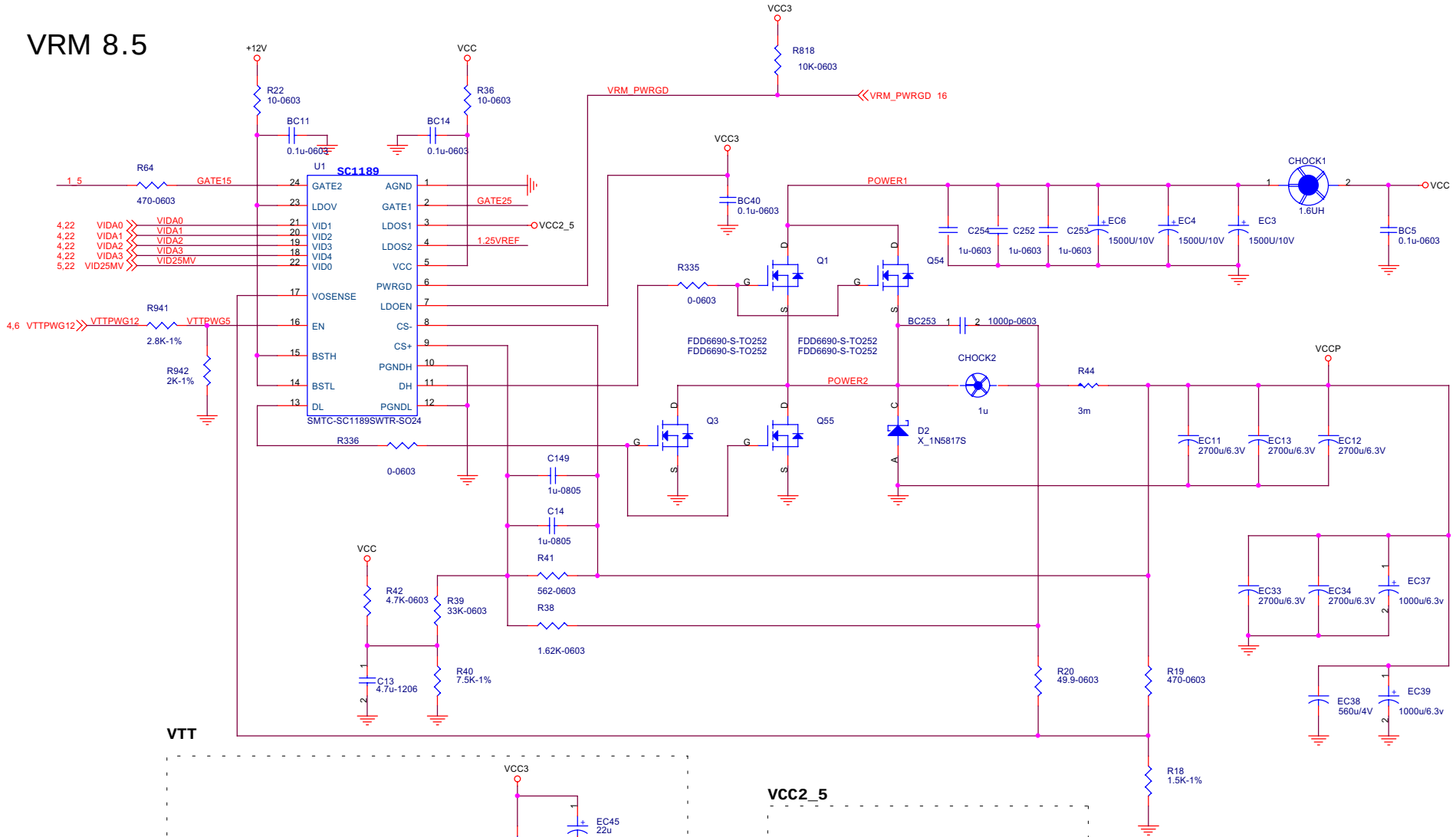

VTT

VCC2_5

MSI			
Title	VRM 8.5		
Size	Document Number	MS-6315-5.0	Rev 1.0
Date:	Friday, August 17, 2001	Sheet 29 of 34	

3.3V DUAL POWER TRANSLATOR

(100mils trace / 20 mils space)

3VDUAL

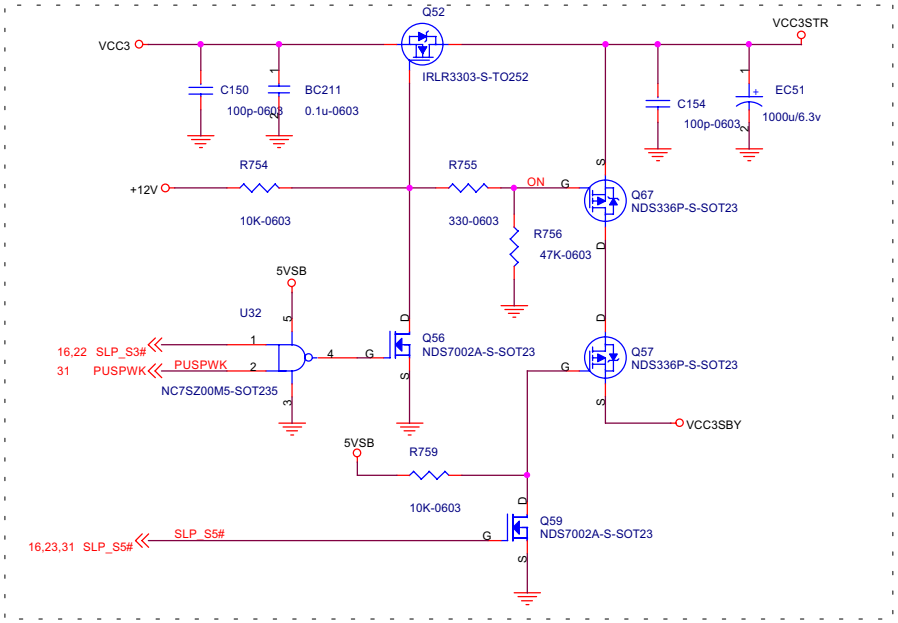

5VDUAL

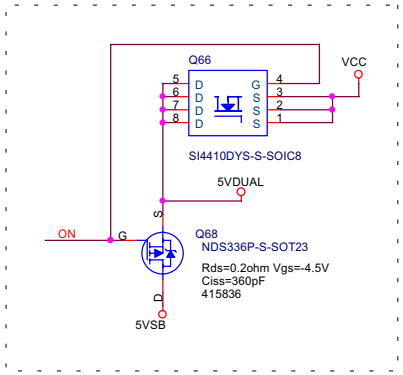

5VDUAL1

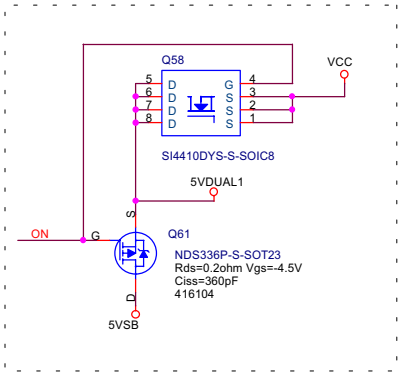

VCMOS

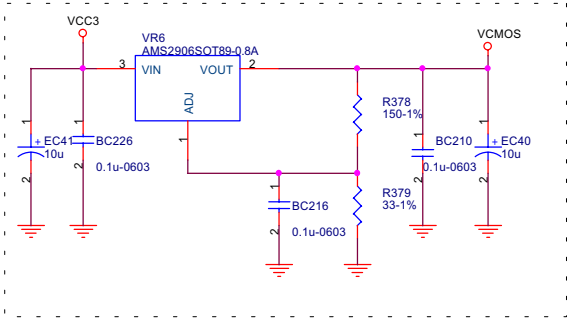

VCC18

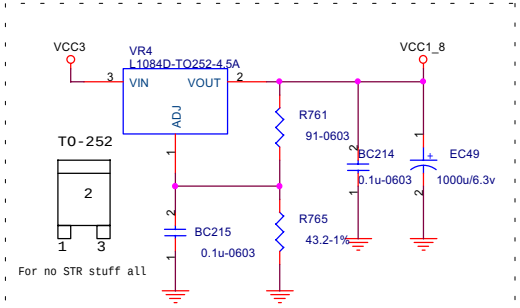

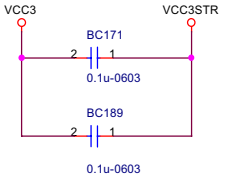

VCC3 SBY

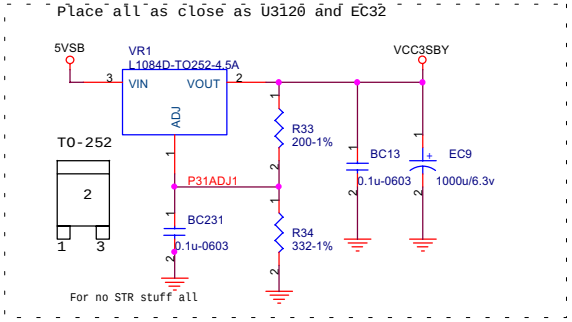

VCC18 SBY

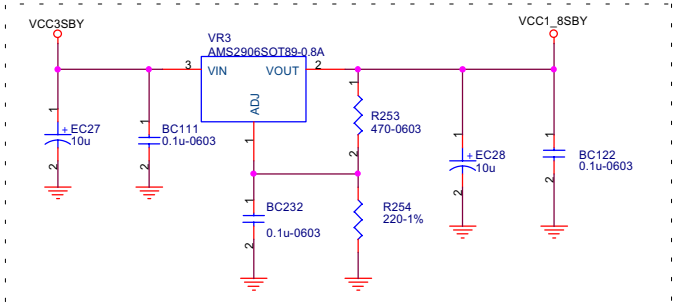

MSI

Title: VOLTAGE REQULATORS

Size	Document Number	Rev
	MS-6315-5.0	1.0

Date: Friday, August 17, 2001 Sheet 30 of 34

Power Connector

BULK POWER DECOUPLING

3/14 change part reference

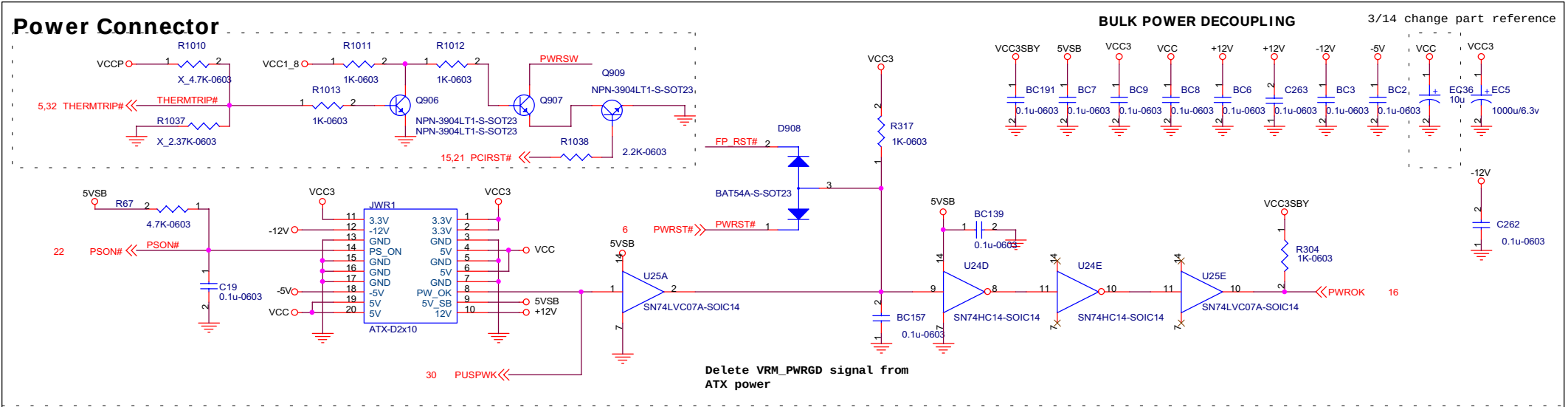

Delete VRM_PWRGD signal from ATX power

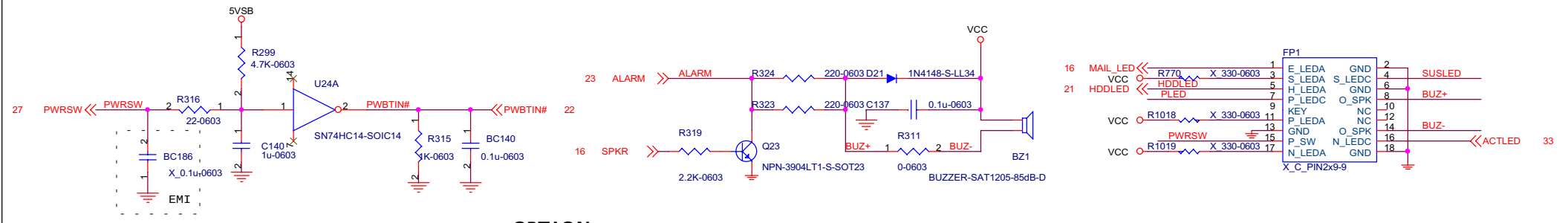

OPTION

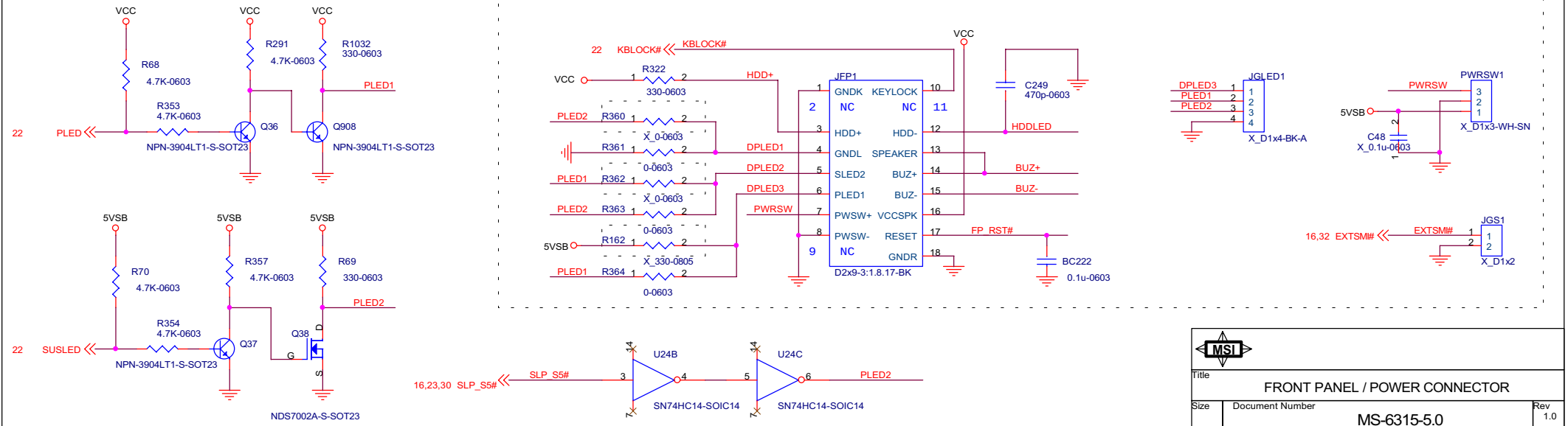

Title	FRONT PANEL / POWER CONNECTOR	
Size	Document Number MS-6315-5.0	Rev 1.0
Date: Friday, August 17, 2001	Sheet 31 of 34	

PULL-UP RESISTORS

PCI BUS

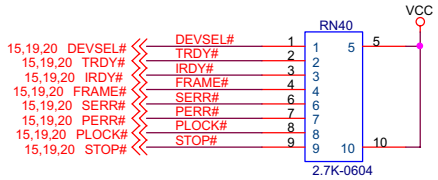

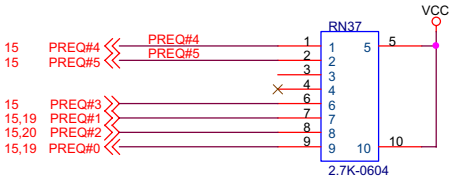

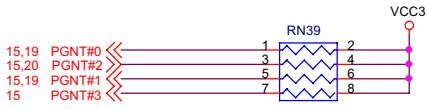

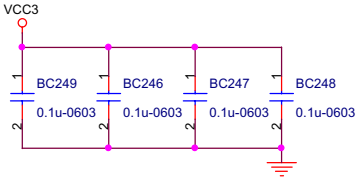

ICH

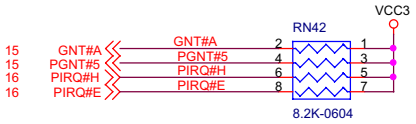

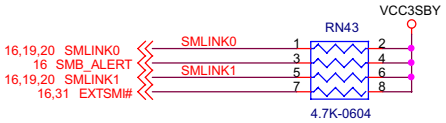

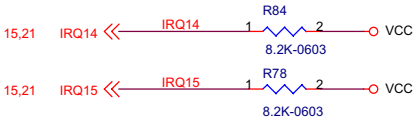

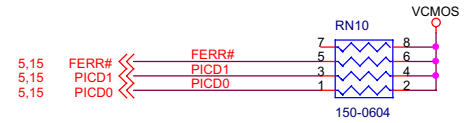

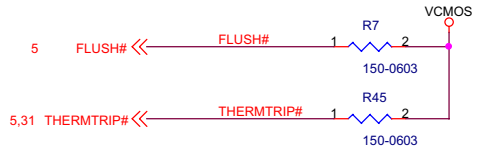

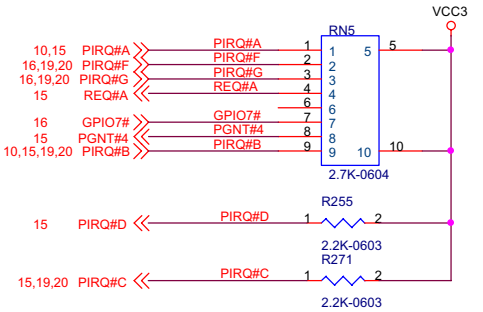

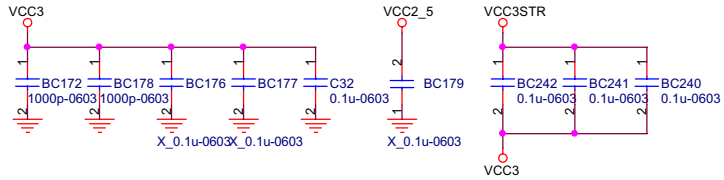

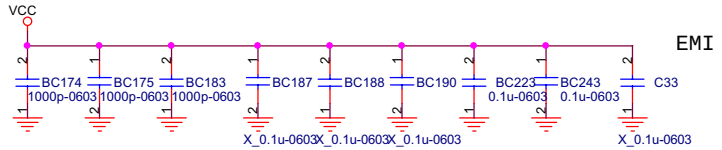

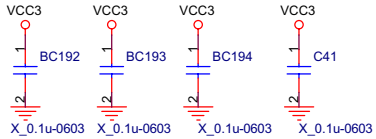

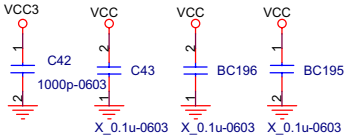

CPU VCORE Bypass Capacitor put in CPU socket

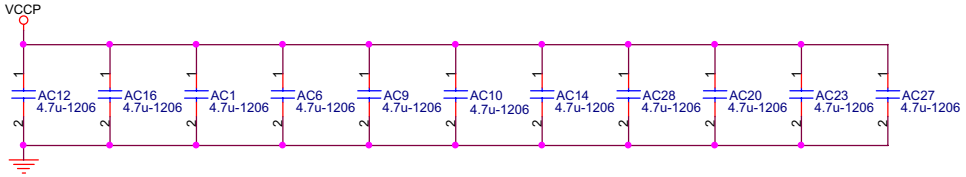

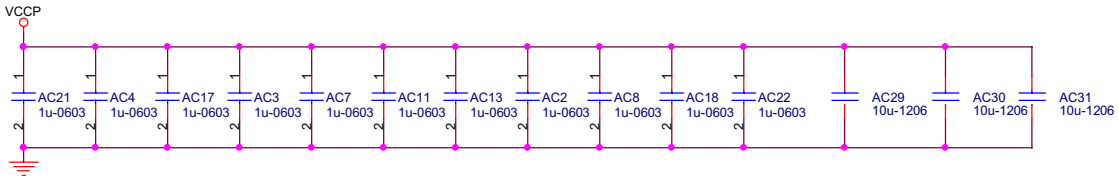

MSI

Title: PULL UP RESISTORS

Size | Document Number: MS-6315-5.0 | Rev: 1.0

Date: Friday, August 17, 2001 | Sheet 32 of 34

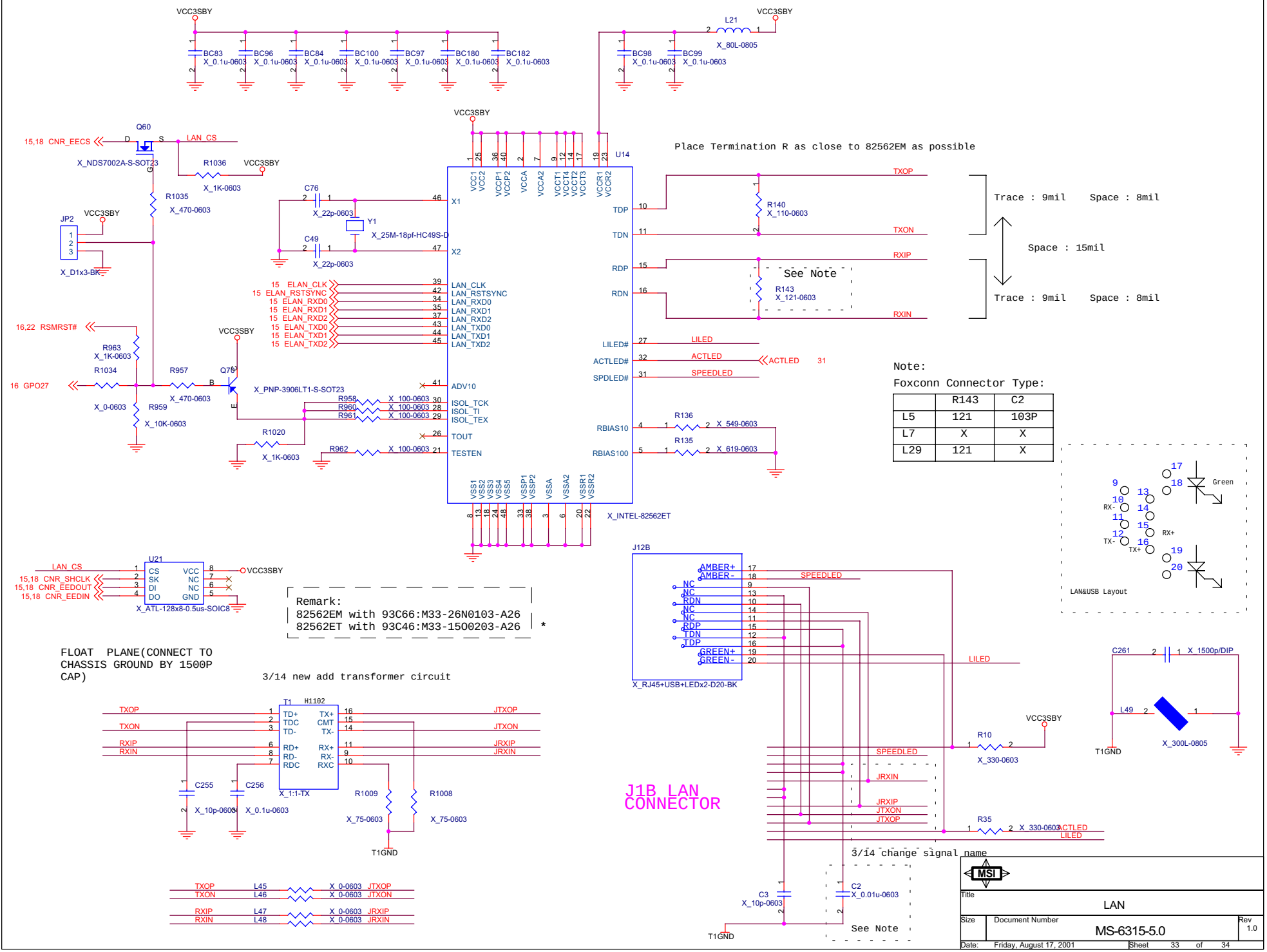

Title	LAN
Size	Document Number: MS-6315-5.0
Rev	1.0
Date:	Friday, August 17, 2001
Sheet	33 of 34

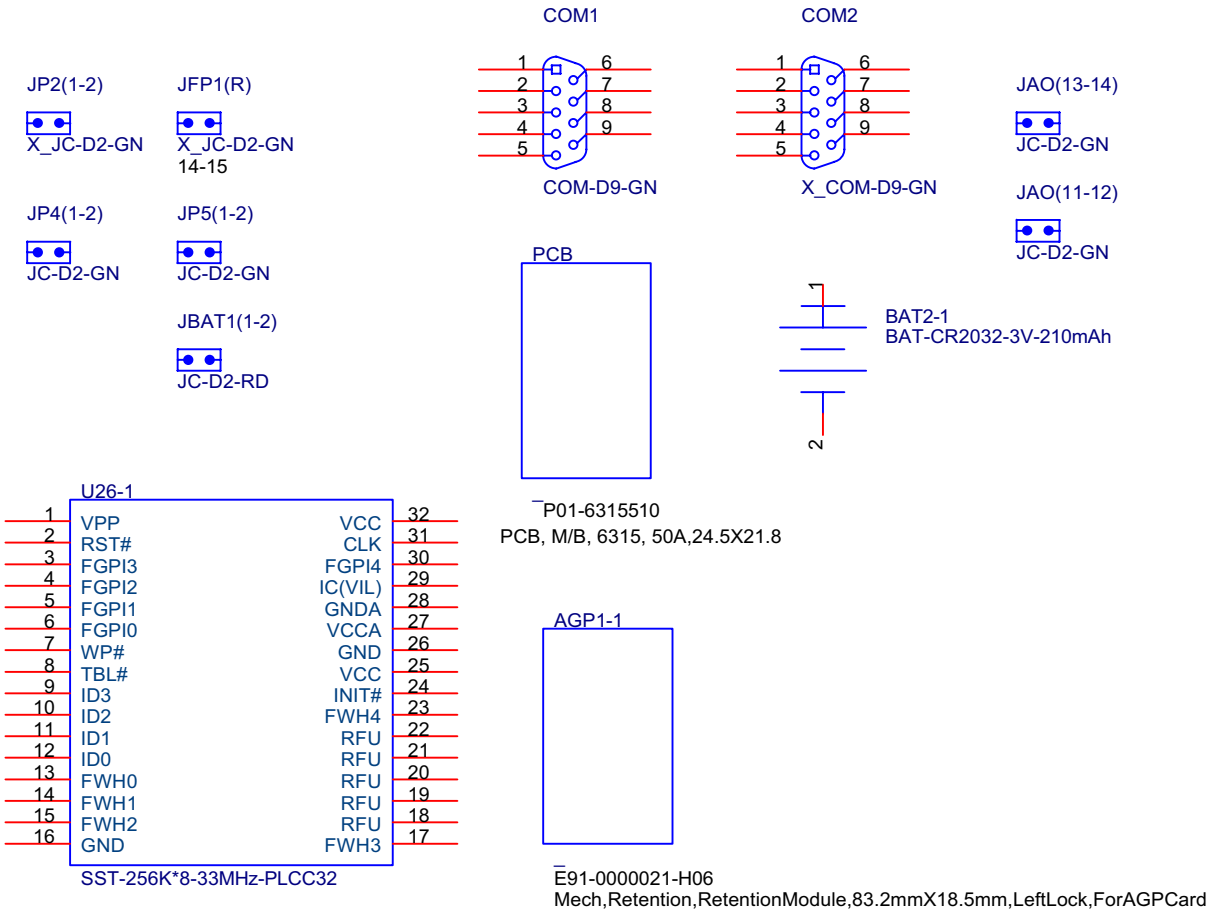

MSI

Title: MANUAL

Size	Document Number	Rev
	MS-6315-5.0	1.0

Date: Friday, August 17, 2001 Sheet 34 of 34

MS-6315 VER6.00 Micro-ATX W/S LAN

Intel FCPGA / FCPGA2 370 Processor

Intel 815E /815EP B-STEP Chipset

SMC LPC47M192

Intel82562ET / 82562EM Chipset

Last Schematic Update Date:

07/11/2001

Title	Page
Cover Sheet	1
Block Diagram	2
BIOS GPIO SPEC	3
370PGA Socket	4,5
Clock Synthesizer	6
GMCH	7,8,9
AGP / AIMM Display Cache	10
Graphics Connectors	11
System Memory	12,13,14
ICH2	15,16
FWH	17
CNR Riser	18
PCI Connectors	19,20
ATA100 Connectors	21
LPC I/O	22
Hardware monitor	23
Parallel / Serial Port	24
Keyboard/Mouse Connectors	25
AC'97 Codec	26
Audio Amp	27
USB HUB & USB Connectors	28
VRM 8.5	29
Voltage Regulators	30
Front Panel / Power connector	31
Pull-up Resistors	32
LAN	33

MSI

Title: COVER PAGE

Size | Document Number: MS-6315 | Rev: 6.00

Date: Friday, July 20, 2001 | Sheet 1 of 33

Block Diagram

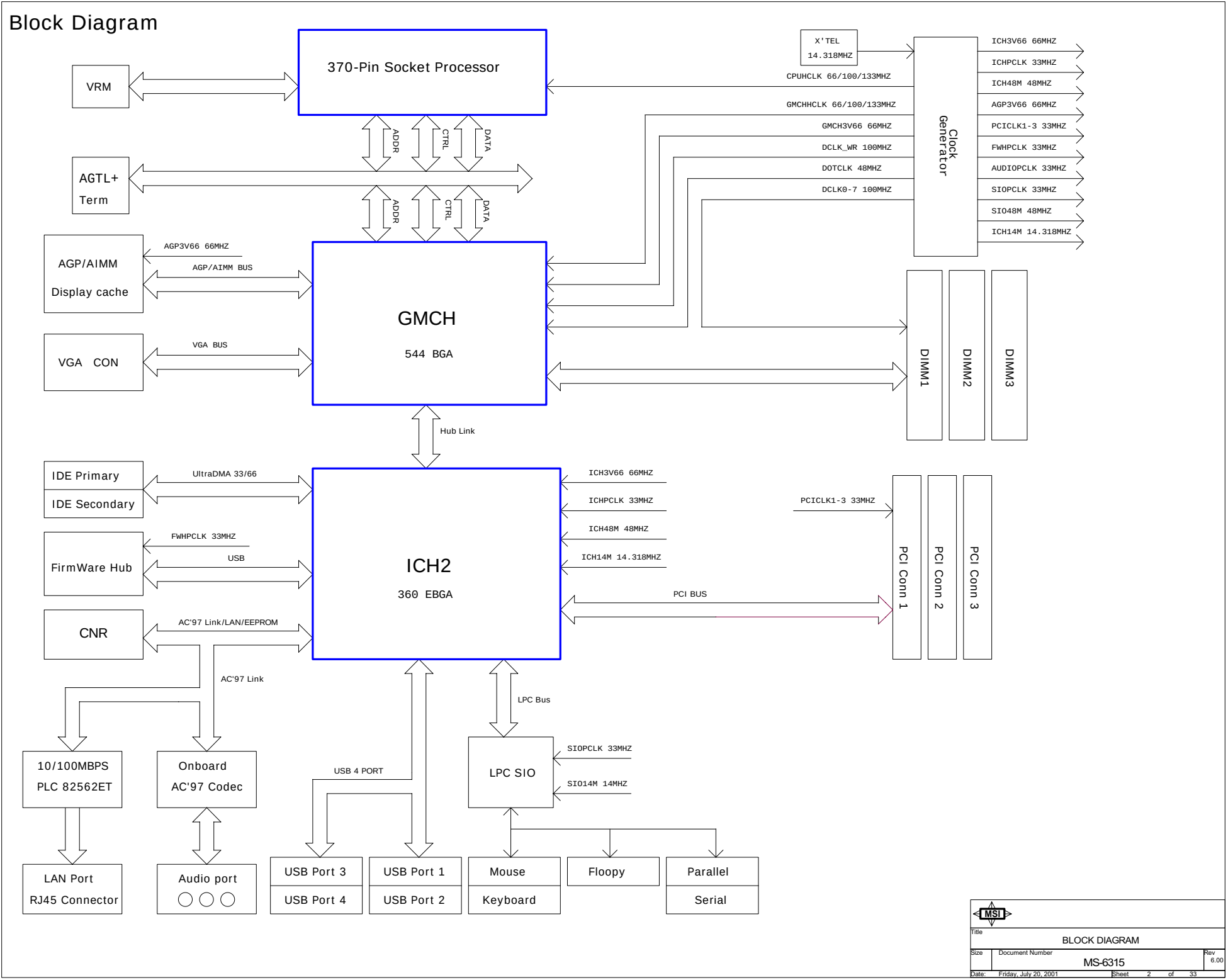

MSI

Title	BLOCK DIAGRAM
Size	Document Number: MS-6315 — Rev: 6.00
Date: Friday, July 20, 2001	Sheet 2 of 33

General Purpose I/O Spec.

ICH

GPIO Pin	Type	Function
GPIO 0		Pull up (REQ#A)
GPIO 1		PREQ#5
GPIO 2		PIRQ#E
GPIO 3		PIRQ#F
GPIO 4		PIRQ#G
GPIO 5		PIRQ#H
GPIO 6		AC97 Codec High / Disable Low / Enable
GPIO 7		PULL UP
GPIO 8		LAN Wake Up
GPIO 9		Not Implemented
GPIO 10		Not Implemented
GPIO 11		SMB_ALERT
GPIO 12		External SMI
GPIO 13		LPC PME
GPIO 14~15		Not Implemented
GPIO 16		Pull up(GNT#A)
GPIO 17		PGNT#5
GPIO 18		NC
GPIO 19~21		NC
GPIO 22		Pull up
GPIO 23		EEPROM CS Control
GPIO 24		NC
GPIO 25		NC
GPIO 26		Not Implemented
GPIO 27		LAN Control ON / OFF
GPIO 28		A20M# Control
GPIO 29~31		Not Implemented

PCI Config.

DEVICE	ICH INT Pin	IDSEL
PCI Slot 1	INTC# INTF# INTG# INTB#	AD25
PCI Slot 2	INTF# INTG# INTB# INTC#	AD26
PCI Slot 3	INTG# INTB# INTC# INTF#	AD27

FWH

GPIO Pin	Type	Function
GPI 0	I	ATA IDE 1 Detect
GPI 1	I	ATA IDE 2 Detect
GPI 2	I	CONFIGURATION
GPI 3	I	CONFIGURATION

ICH2 SMLINK0,1 Connect to PCI1,2,3 for PCI card AOL

Title	BIOS GPIO SPEC.	
Size	Document Number MS-6315	Rev 6.00
Date: Friday, July 20, 2001	Sheet 3 of 33	

370PGA Socket Part 1

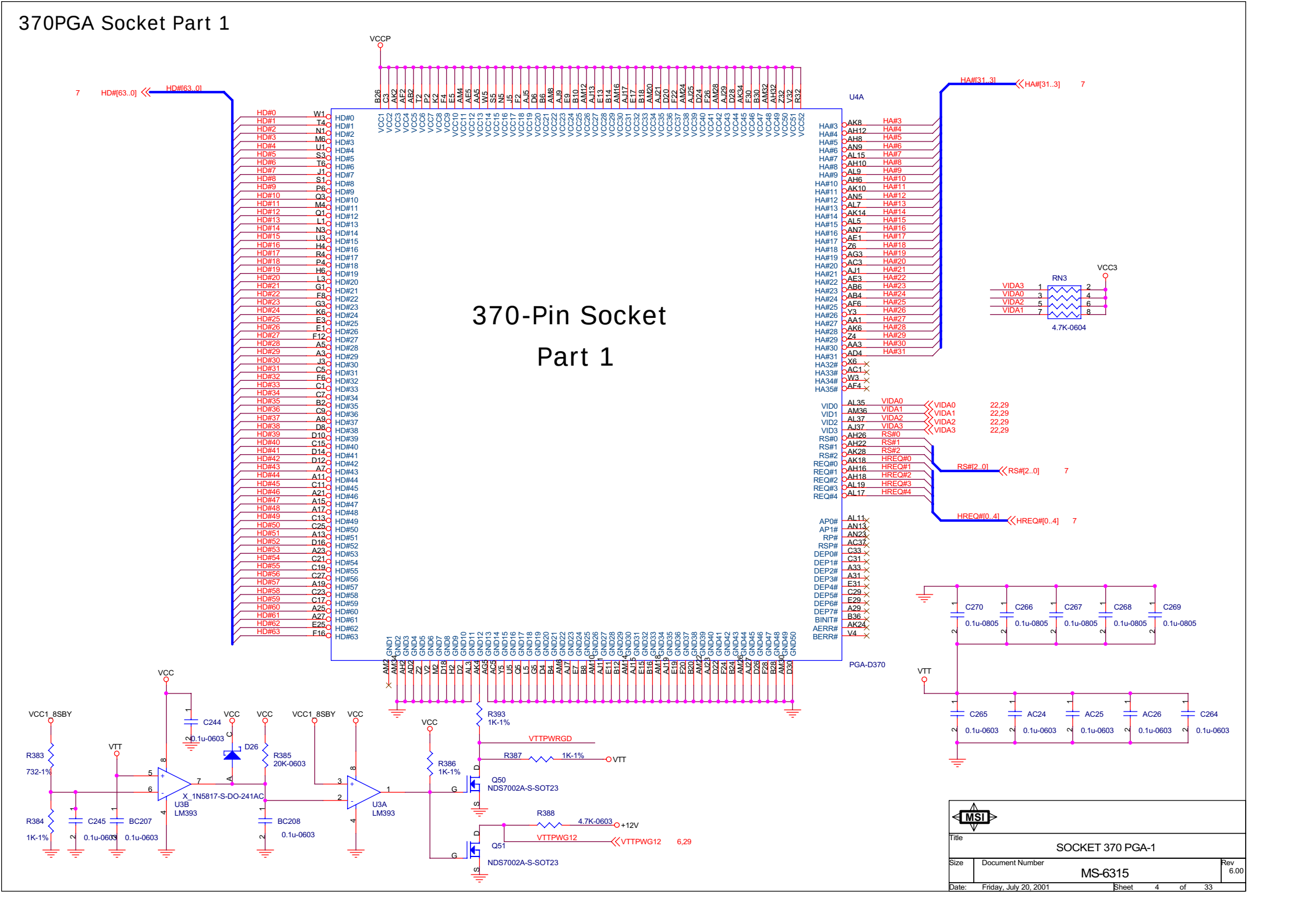

370PGA Socket Part 2

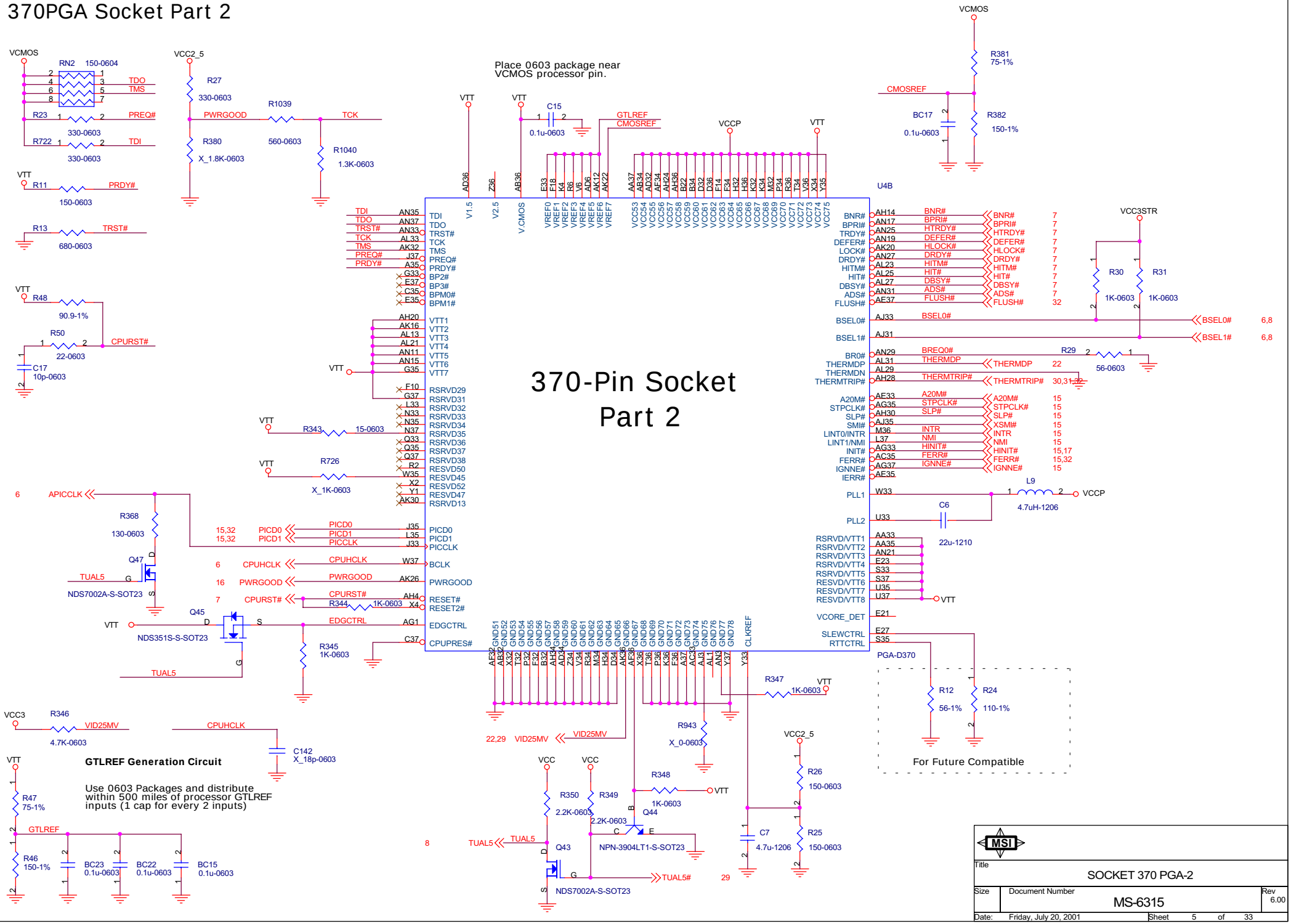

Title	SOCKET 370 PGA-2		
Size	Document Number MS-6315		Rev 6.00
Date: Friday, July 20, 2001	Sheet 5 of 33		

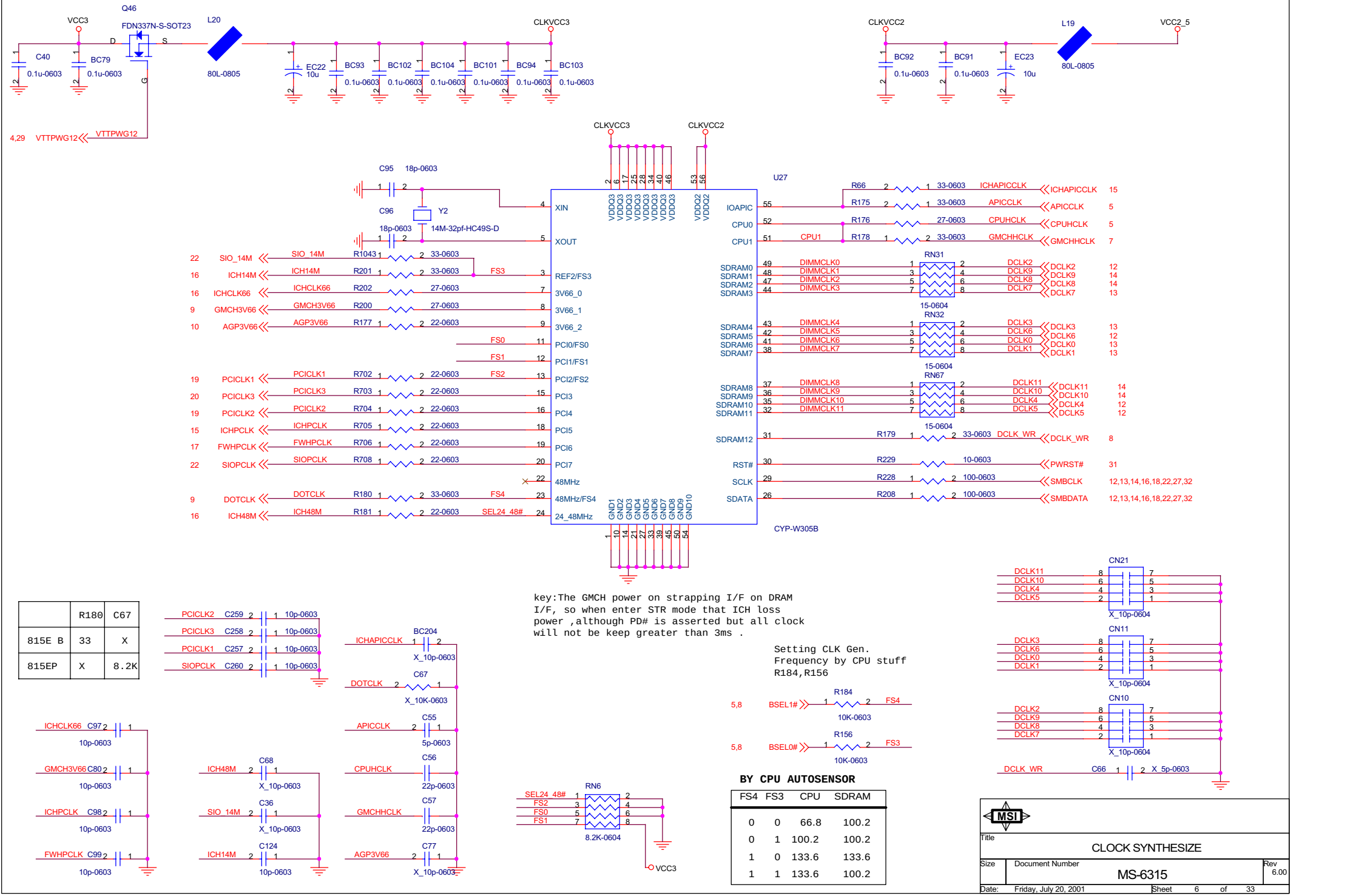

	R180	C67
815E B	33	X
815EP	X	8.2K

BY CPU AUTOSENSOR

FS4	FS3	CPU	SDRAM
0	0	66.8	100.2
0	1	100.2	100.2
1	0	133.6	133.6
1	1	133.6	100.2

MSI

Title: CLOCK SYNTHESIZE

Size | Document Number: MS-6315 | Rev: 6.00

Date: Friday, July 20, 2001 | Sheet 6 of 33

82815, PART 1 : HOST INTERFACE

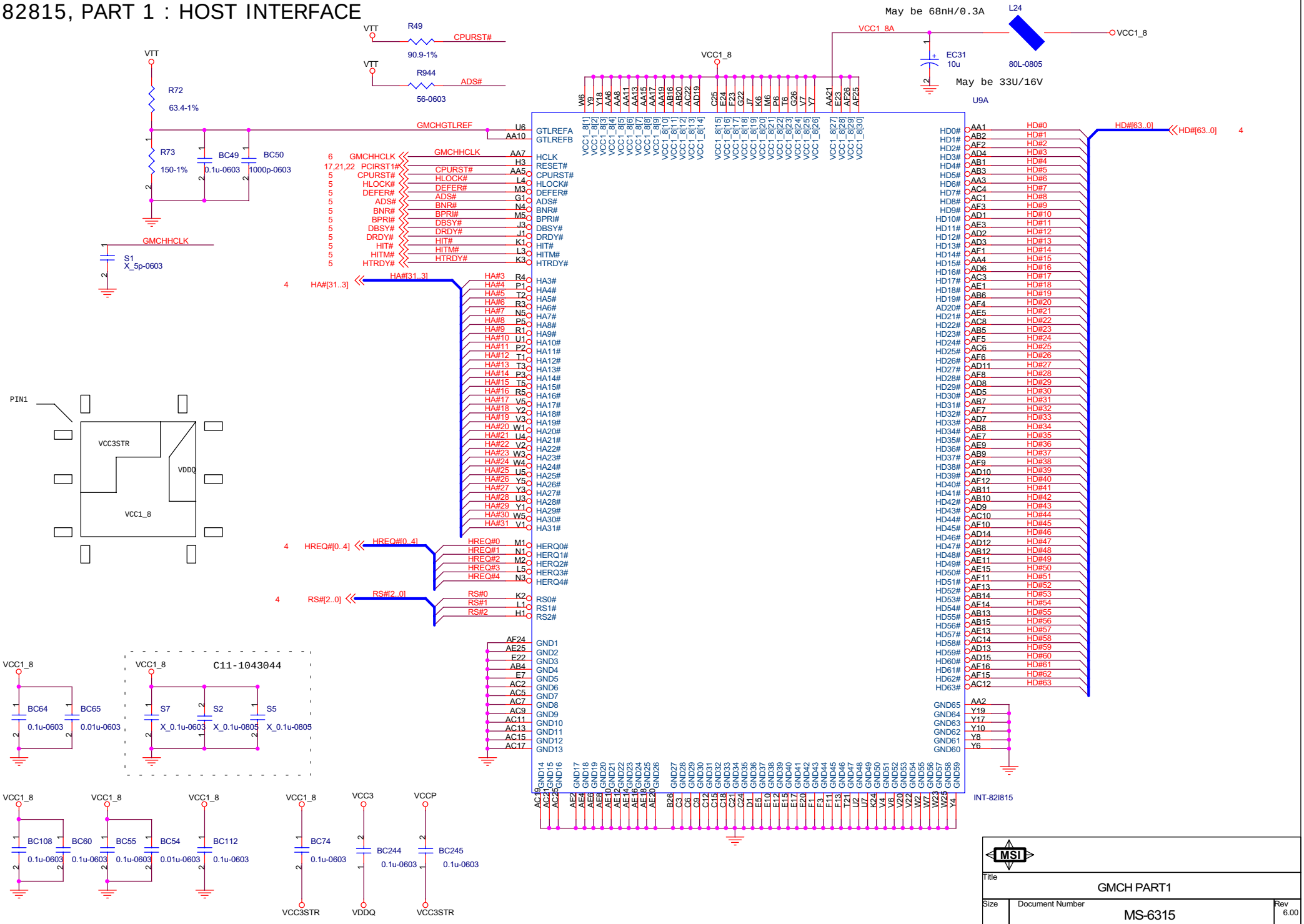

Title	GMCH PART1		
Size	Document Number MS-6315		Rev 6.00
Date: Friday, July 20, 2001	Sheet 7 of 33		

GMCH, PART 2 : SYSTEM MEMORY

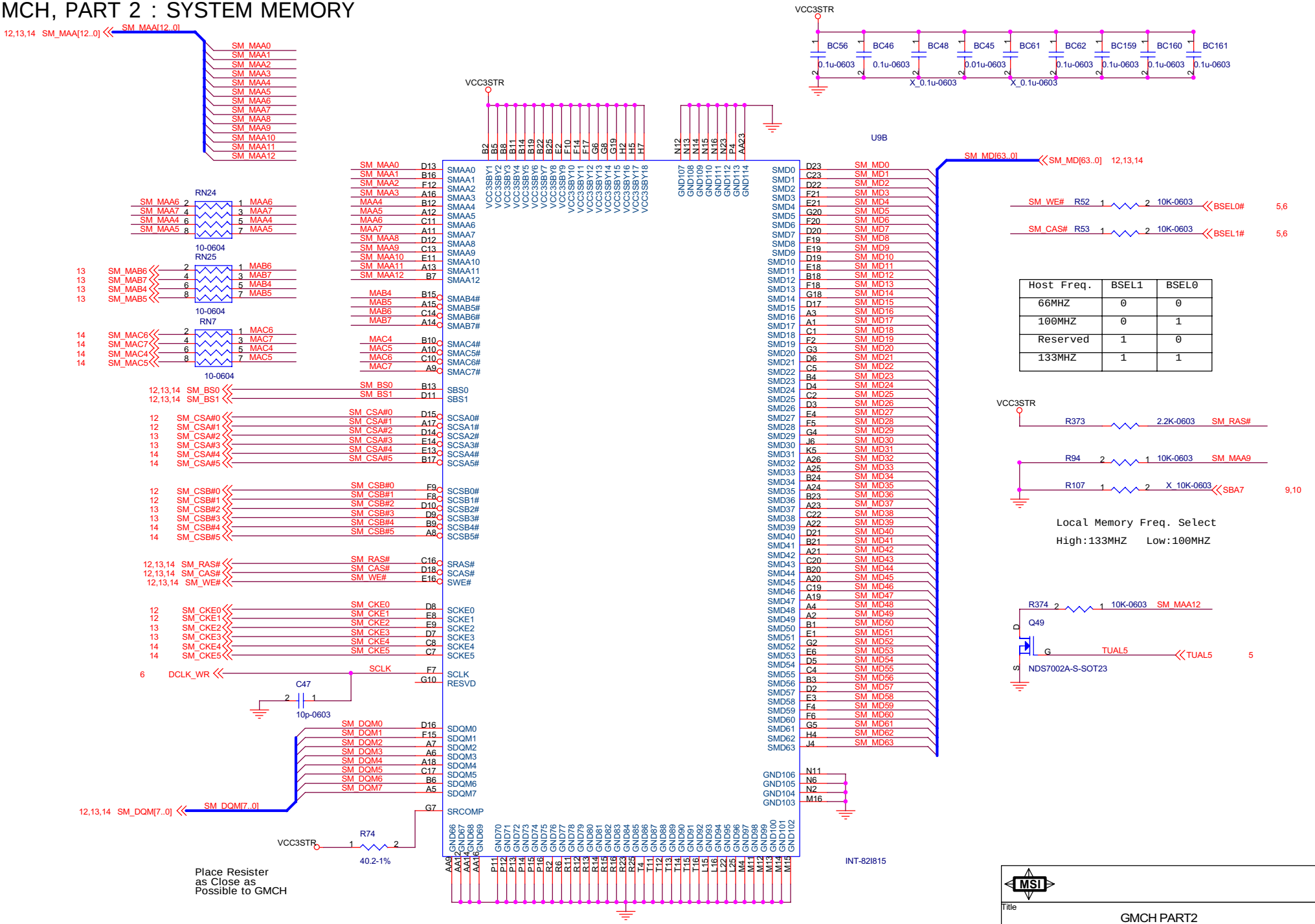

Title	GMCH PART2	
Size	Document Number MS-6315	Rev 6.00
Date: Friday, July 20, 2001	Sheet 8 of 33	

GMCH PART 3 : AGP & VIDEO Interface & HUB link

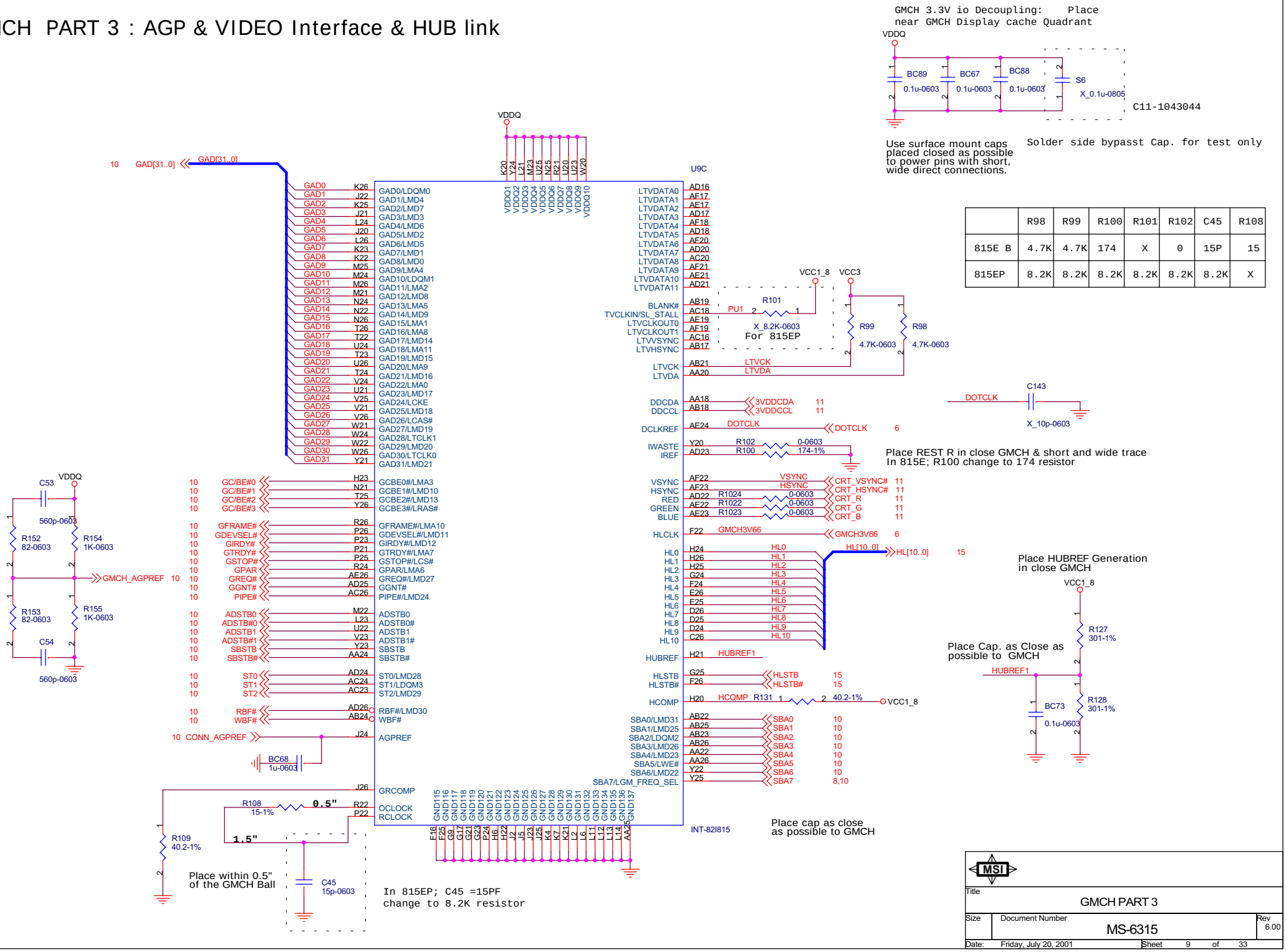

	R98	R99	R100	R101	R102	C45	R108
815E B	4.7K	4.7K	174	X	0	15P	15
815EP	8.2K	8.2K	8.2K	8.2K	8.2K	8.2K	X

Title	GMCH PART 3	
Size	Document Number MS-6315	Rev 6.00
Date: Friday, July 20, 2001	Sheet 9 of 33	

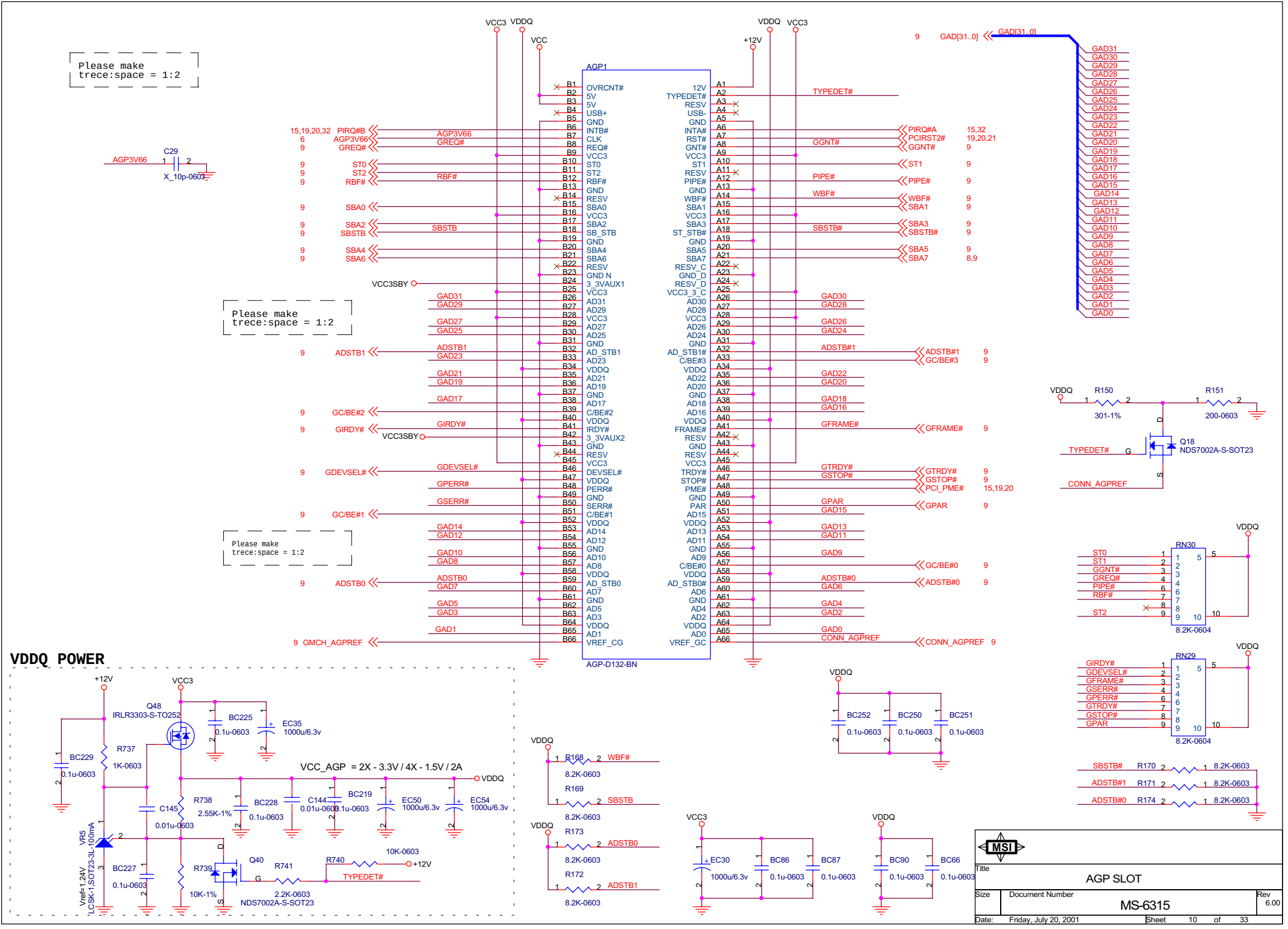
Please make trece:space = 1:2
Please make trece:space = 1:2
Please make trece:space = 1:2
AGP1
AGP-D132-BN
VDDQ POWER
VCC_AGP = 2X - 3.3V / 4X - 1.5V / 2A
Title
AGP SLOT
MS-6315
Size
Document Number
Rev 6.00
Date: Friday, July 20, 2001
Sheet 10 of 33

Video Connector

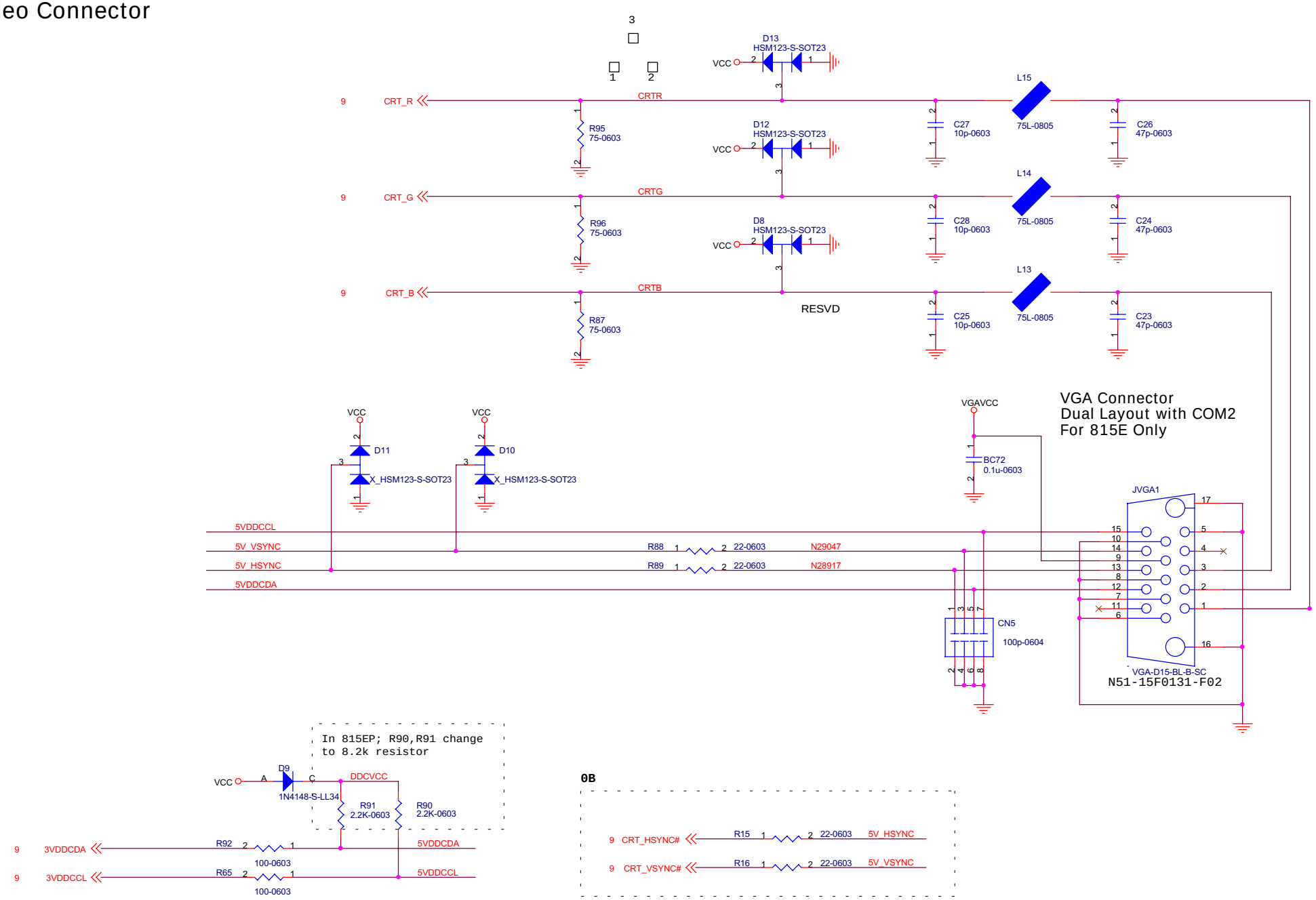

MSI		
Title	VGA CONNECTOR	
Size	Document Number MS-6315	Rev 6.00
Date: Friday, July 20, 2001	Sheet 11 of 33	

DIMM1

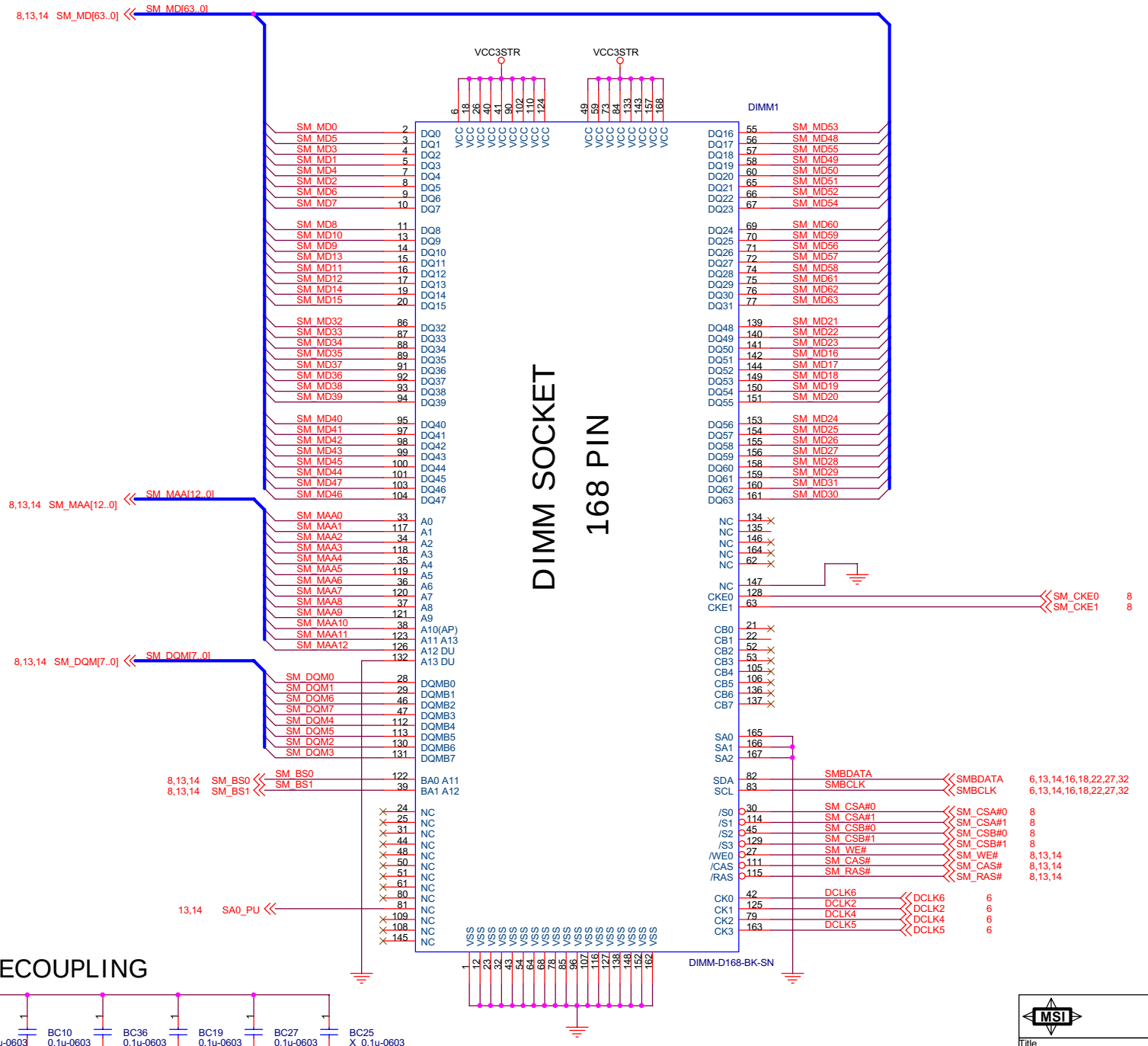

DIMM DECOUPLING

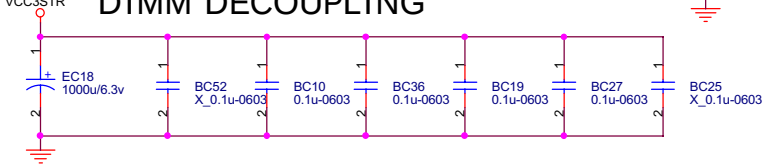

Title	DIMM1		
Size	Document Number MS-6315		Rev 6.00
Date: Friday, July 20, 2001	Sheet 12 of 33		

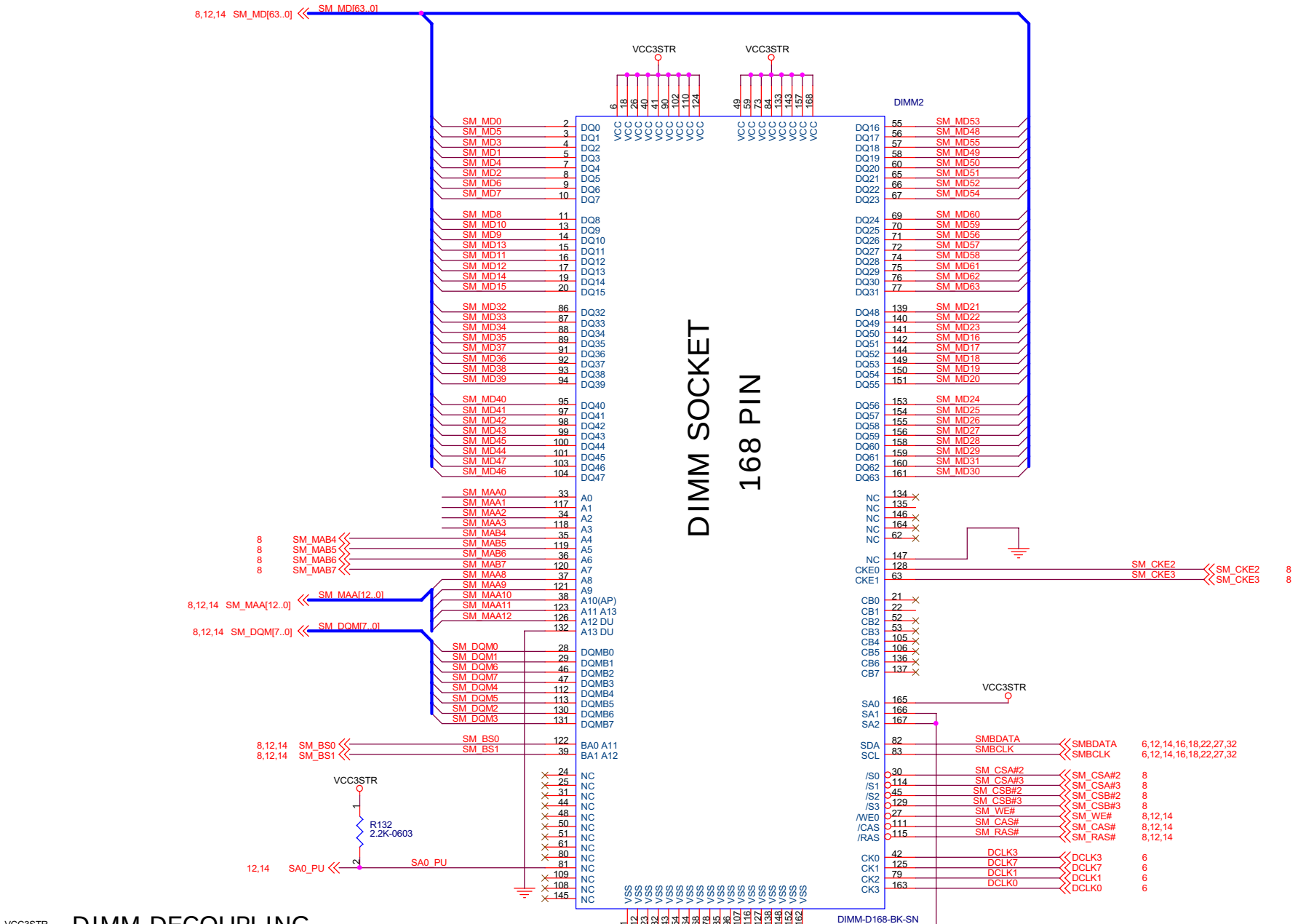
8,12,14 SM_MD[63..0]
SM_MD[63..0]
VCC3STR
VCC3STR
DIMM2
DIMM SOCKET
168 PIN
SM_MD0 SM_MD5 SM_MD3 SM_MD1 SM_MD4 SM_MD2 SM_MD6 SM_MD7
SM_MD8 SM_MD10 SM_MD9 SM_MD13 SM_MD11 SM_MD12 SM_MD14 SM_MD15
SM_MD32 SM_MD33 SM_MD34 SM_MD35 SM_MD37 SM_MD36 SM_MD38 SM_MD39
SM_MD40 SM_MD41 SM_MD42 SM_MD43 SM_MD45 SM_MD44 SM_MD47 SM_MD46
SM_MD53 SM_MD48 SM_MD55 SM_MD49 SM_MD50 SM_MD51 SM_MD52 SM_MD54
SM_MD60 SM_MD59 SM_MD56 SM_MD57 SM_MD58 SM_MD61 SM_MD62 SM_MD63
SM_MD21 SM_MD22 SM_MD23 SM_MD16 SM_MD17 SM_MD18 SM_MD19 SM_MD20
SM_MD24 SM_MD25 SM_MD26 SM_MD27 SM_MD28 SM_MD29 SM_MD31 SM_MD30
SM_MAA0 SM_MAA1 SM_MAA2 SM_MAA3 SM_MAB4 SM_MAB5 SM_MAB6 SM_MAB7 SM_MAA8 SM_MAA9 SM_MAA10 SM_MAA11 SM_MAA12
8 SM_MAB4
8 SM_MAB5
8 SM_MAB6
8 SM_MAB7
8,12,14 SM_MAA[12..0]
SM_MAA[12..0]
8,12,14 SM_DQM[7..0]
SM_DQM[7..0]
SM_DQM0 SM_DQM1 SM_DQM6 SM_DQM7 SM_DQM4 SM_DQM5 SM_DQM2 SM_DQM3
SM_BS0 SM_BS1
8,12,14 SM_BS0
8,12,14 SM_BS1
VCC3STR
R132
2.2K-0603
12,14 SA0_PU
SA0_PU
SM_CKE2 SM_CKE3
SM_CKE2 8
SM_CKE3 8
VCC3STR
SMBDATA SMBCLK
SMBDATA 6,12,14,16,18,22,27,32
SMBCLK 6,12,14,16,18,22,27,32
SM_CSA#2 SM_CSA#3 SM_CSB#2 SM_CSB#3 SM_WE# SM_CAS# SM_RAS#
SM_CSA#2 8
SM_CSA#3 8
SM_CSB#2 8
SM_CSB#3 8
SM_WE# 8,12,14
SM_CAS# 8,12,14
SM_RAS# 8,12,14
DCLK3 DCLK7 DCLK1 DCLK0
DCLK3 6
DCLK7 6
DCLK1 6
DCLK0 6
DIMM-D168-BK-SN
VCC3STR
DIMM DECOUPLING
BC18 0.1u-0603
BC37 0.1u-0603
BC78 0.1u-0603
BC77 0.1u-0603
BC51 0.1u-0603
BC69 X_0.1u-0603
MSI
Title
DIMM2
Size
Document Number
MS-6315
Rev
6.00
Date: Friday, July 20, 2001
Sheet 13 of 33

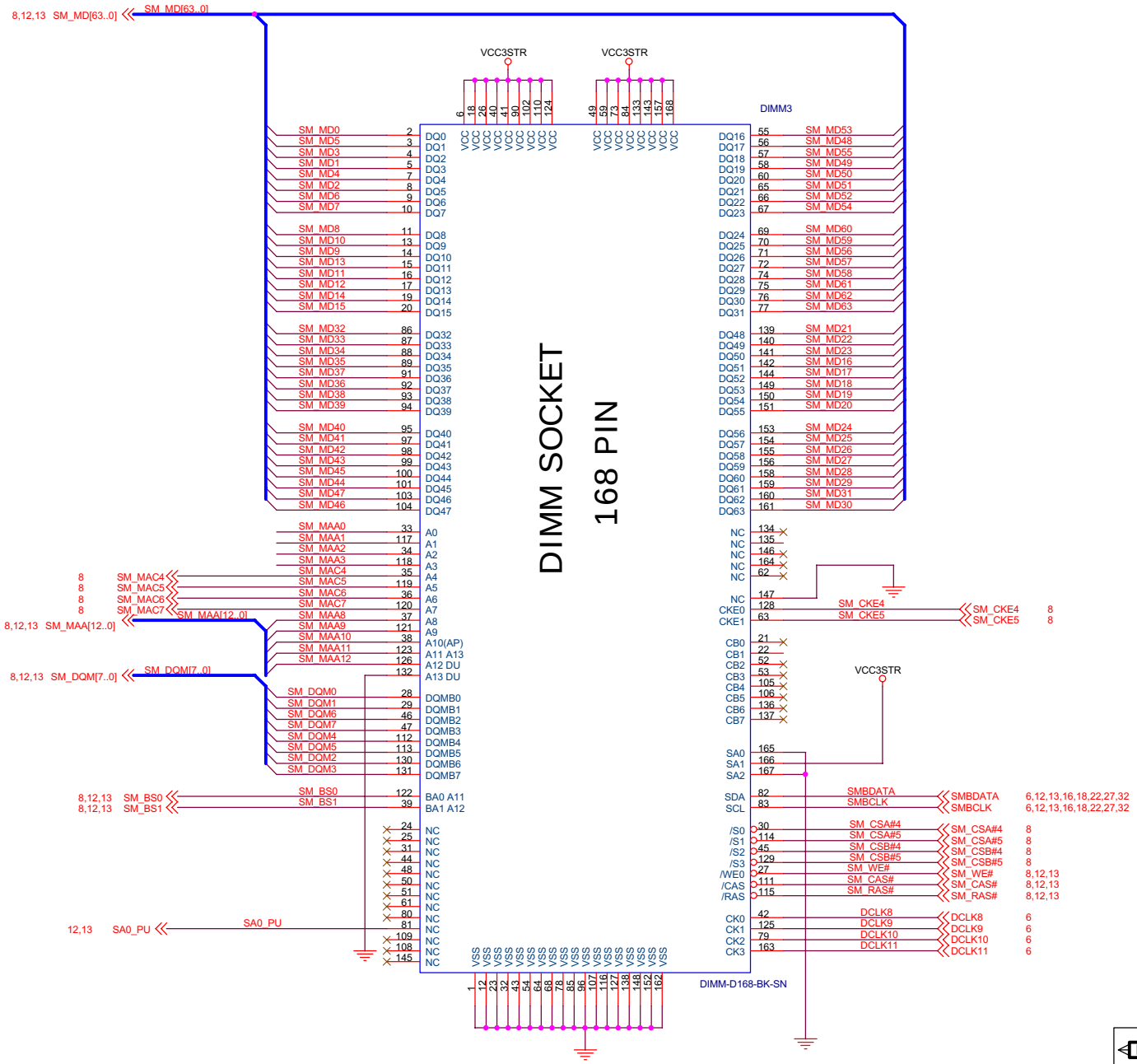

Title	DIMM3	
Size	Document Number MS-6315	Rev 6.00
Date: Friday, July 20, 2001	Sheet 14 of 33	

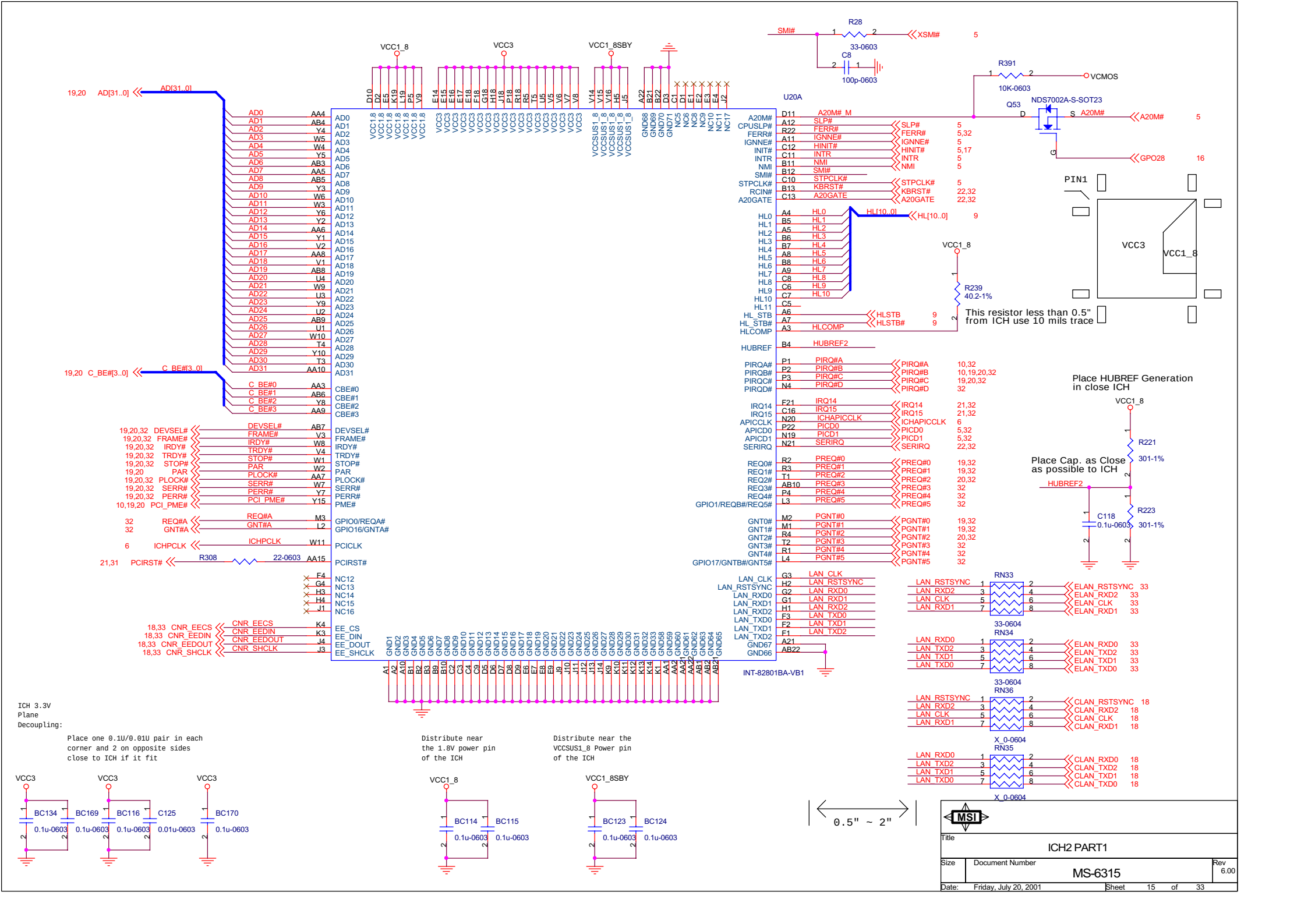
U20A
INT-82801BA-VB1
R28
33-0603
C8
100p-0603
R391
10K-0603
VCMOS
Q53
NDS7002A-S-SOT23
R239
40.2-1%
This resistor less than 0.5" from ICH use 10 mils trace
PIN1
VCC3
VCC1_8
Place HUBREF Generation in close ICH
Place Cap. as Close as possible to ICH
R221
301-1%
R223
301-1%
C118
0.1u-0603
HUBREF2
RN33
RN34
RN36
RN35
33-0604
X_0-0604
ICH 3.3V Plane Decoupling:
Place one 0.1U/0.01U pair in each corner and 2 on opposite sides close to ICH if it fit
Distribute near the 1.8V power pin of the ICH
Distribute near the VCCSUS1_8 Power pin of the ICH
BC134
BC169
BC116
C125
BC170
BC114
BC115
BC123
BC124
0.1u-0603
0.01u-0603
0.5" ~ 2"
MSI
Title
ICH2 PART1
Size
Document Number
MS-6315
Rev
6.00
Date: Friday, July 20, 2001
Sheet 15 of 33

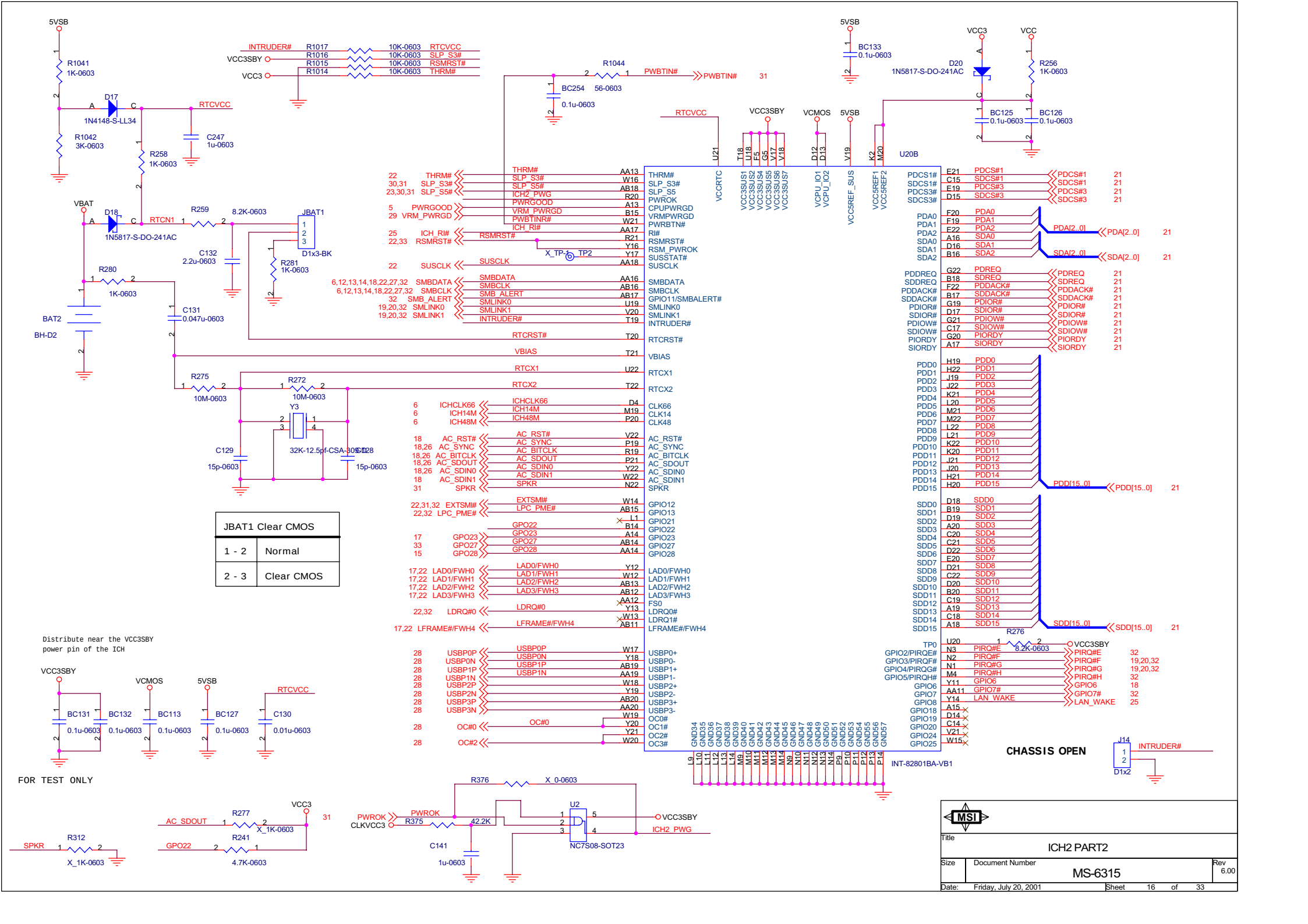
5VSB
R1041 1K-0603
D17 1N4148-S-LL34
RTCVCC
R1042 3K-0603
R258 1K-0603
C247 1u-0603
INTRUDER# R1017 10K-0603 RTCVCC
R1016 10K-0603 SLP_S3#
VCC3SBY R1015 10K-0603 RSMRST#
VCC3 R1014 10K-0603 THRM#
R1044 PWBTIN# PWBTIN# 31
BC254 56-0603
0.1u-0603
BC133 0.1u-0603
D20 1N5817-S-DO-241AC
VCC3
VCC
R256 1K-0603
BC125 0.1u-0603
BC126 0.1u-0603
VBAT
D18 1N5817-S-DO-241AC
RTCN1
R259 8.2K-0603
JBAT1
D1x3-BK
C132 2.2u-0603
R281 1K-0603
R280 1K-0603
BAT2 BH-D2
C131 0.047u-0603
R275 10M-0603
R272 10M-0603
Y3 32K-12.5pf-CSA-30S
C129 15p-0603
C128 15p-0603
RTCRST#
VBIAS
RTCX1
RTCX2
U21 VCCRTC
T18 U18 F5 G5 V17 V18 VCC3SUS1 VCC3SUS2 VCC3SUS4 VCC3SUS5 VCC3SUS6 VCC3SUS7
D12 D13 VCPU_IO1 VCPU_IO2
V19 VCC5REF_SUS
K2 M20 VCC5REF1 VCC5REF2
U20B
THRM# SLP_S3# SLP_S5# PWROK CPUPWRGD VRMPWRGD PWRBTN# RI# RSMRST# RSM_PWROK SUSSTAT# SUSCLK
SMBDATA SMBCLK GPIO11/SMBALERT# SMLINK0 SMLINK1 INTRUDER#
ICHCLK66 ICH14M ICH48M
AC_RST# AC_SYNC AC_BITCLK AC_SDOUT AC_SDIN0 AC_SDIN1 SPKR
EXTSMI# LPC_PME#
GPO22 GPO23 GPO27 GPO28
LAD0/FWH0 LAD1/FWH1 LAD2/FWH2 LAD3/FWH3 FS0 LDRQ0# LDRQ1# LFRAME#/FWH4
USBP0P USBP0N USBP1P USBP1N USBP2P USBP2N USBP3P USBP3N OC0# OC1# OC2# OC3#
GND34 GND35 GND36 GND37 GND38 GND39 GND40 GND41 GND42 GND43 GND44 GND45 GND46 GND47 GND48 GND49 GND50 GND51 GND52 GND53 GND54 GND55 GND56 GND57
INT-82801BA-VB1
PDCS1# SDCS1# PDCS3# SDCS3#
PDA0 PDA1 PDA2 SDA0 SDA1 SDA2
PDREQ SDREQ PDDACK# SDDACK# PDIOR# SDIOR# PDIOW# SDIOW# PIORDY SIORDY
PDD0 PDD1 PDD2 PDD3 PDD4 PDD5 PDD6 PDD7 PDD8 PDD9 PDD10 PDD11 PDD12 PDD13 PDD14 PDD15
SDD0 SDD1 SDD2 SDD3 SDD4 SDD5 SDD6 SDD7 SDD8 SDD9 SDD10 SDD11 SDD12 SDD13 SDD14 SDD15
R276 8.2K-0603
TP0 GPIO2/PIRQE# GPIO3/PIRQF# GPIO4/PIRQG# GPIO5/PIRQH# GPIO6 GPIO7 GPIO8 GPIO18 GPIO19 GPIO20 GPIO24 GPIO25
PIRQ#E PIRQ#F PIRQ#G PIRQ#H GPIO6 GPIO7# LAN_WAKE
VCC3SBY
CHASSIS OPEN
J14 INTRUDER# D1x2
JBAT1 Clear CMOS
1 - 2 Normal
2 - 3 Clear CMOS
Distribute near the VCC3SBY power pin of the ICH
VCC3SBY VCMOS 5VSB RTCVCC
BC131 0.1u-0603
BC132 0.1u-0603
BC113 0.1u-0603
BC127 0.1u-0603
C130 0.01u-0603
FOR TEST ONLY
R312 X_1K-0603
R277 X_1K-0603
R241 4.7K-0603
AC_SDOUT GPO22 SPKR
R376 X_0-0603
R375 42.2K
C141 1u-0603
U2 NC7S08-SOT23
PWROK CLKVCC3 ICH2_PWG
MSI
Title ICH2 PART2
Size Document Number MS-6315 Rev 6.00
Date: Friday, July 20, 2001 Sheet 16 of 33

Firware Hub (FWH)

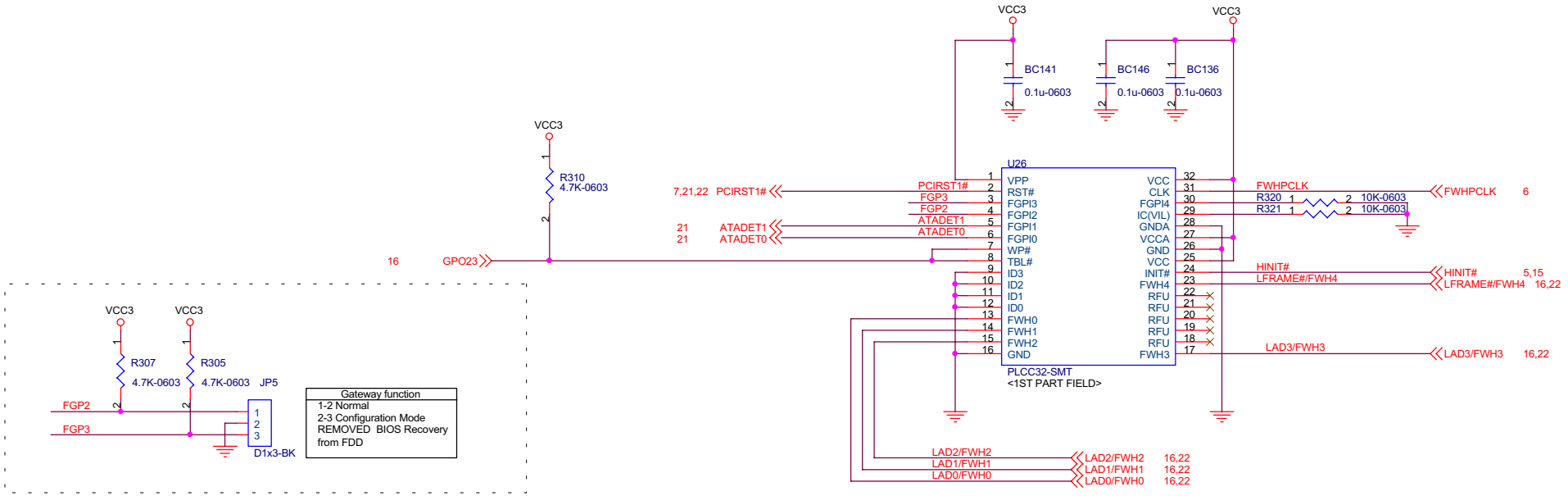

Title	FIWARE HUB	
Size	Document Number MS-6315	Rev 6.00
Date: Friday, July 20, 2001	Sheet 17 of 33	

CNR RISER

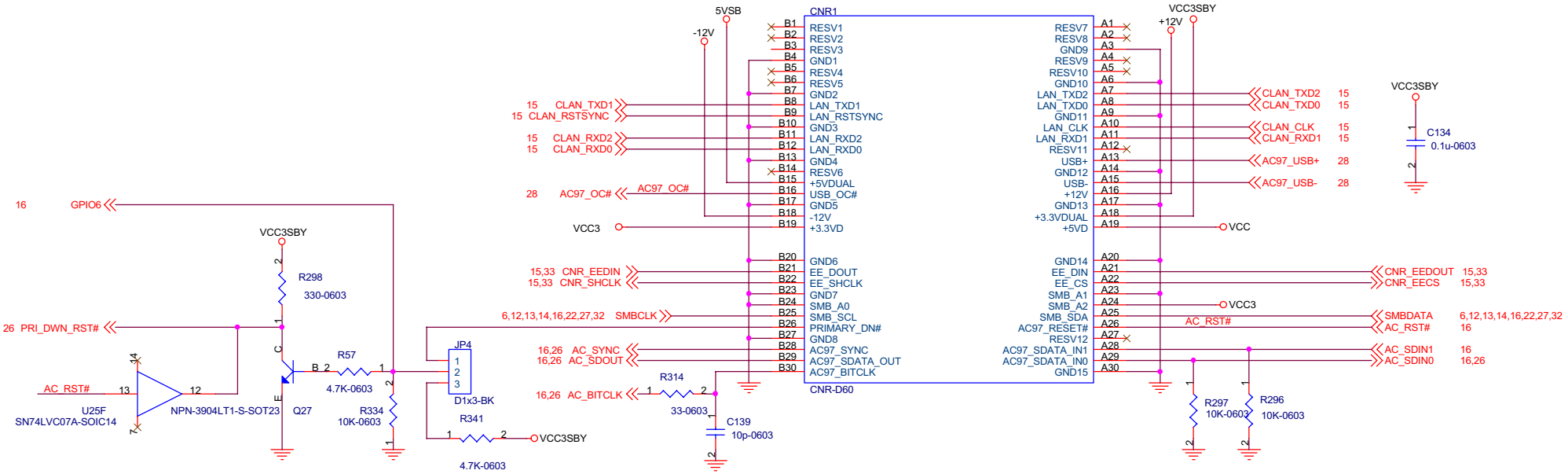

MSI		
Title	CNR	
Size	Document Number MS-6315	Rev 6.00
Date: Friday, July 20, 2001	Sheet 18 of 33	

PCI Connectors

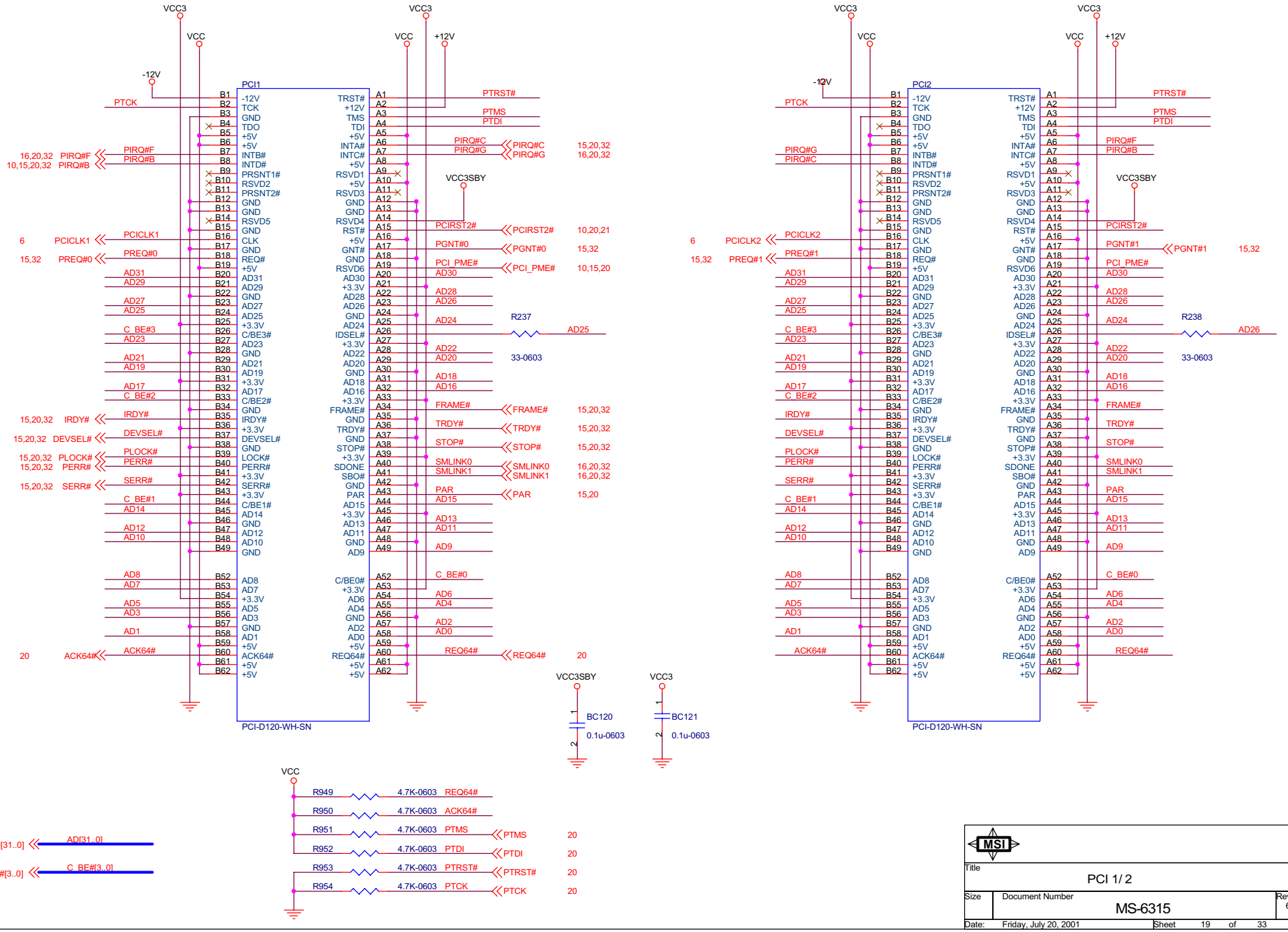

MSI		
Title	PCI 1/2	
Size	Document Number MS-6315	Rev 6.00
Date: Friday, July 20, 2001	Sheet 19 of 33	

PCI Slot

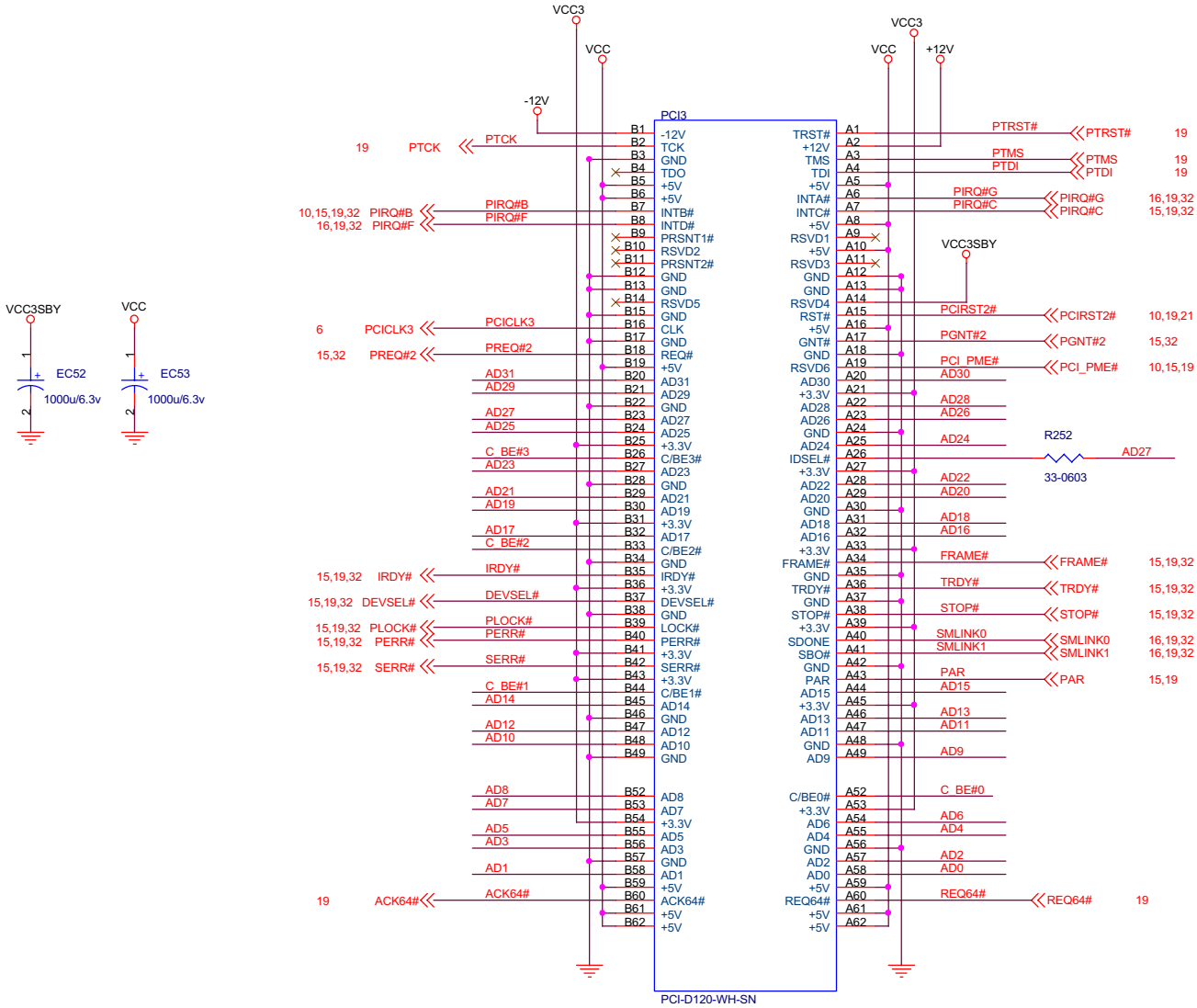

15,19 AD[31..0] AD[31..0]

15,19 C_BE#[3..0] C_BE#[3..0]

MSI		
Title	PCI3	
Size	Document Number MS-6315	Rev 6.00
Date: Friday, July 20, 2001	Sheet 20 of 33	

ATA100 IDE CONNECTORS

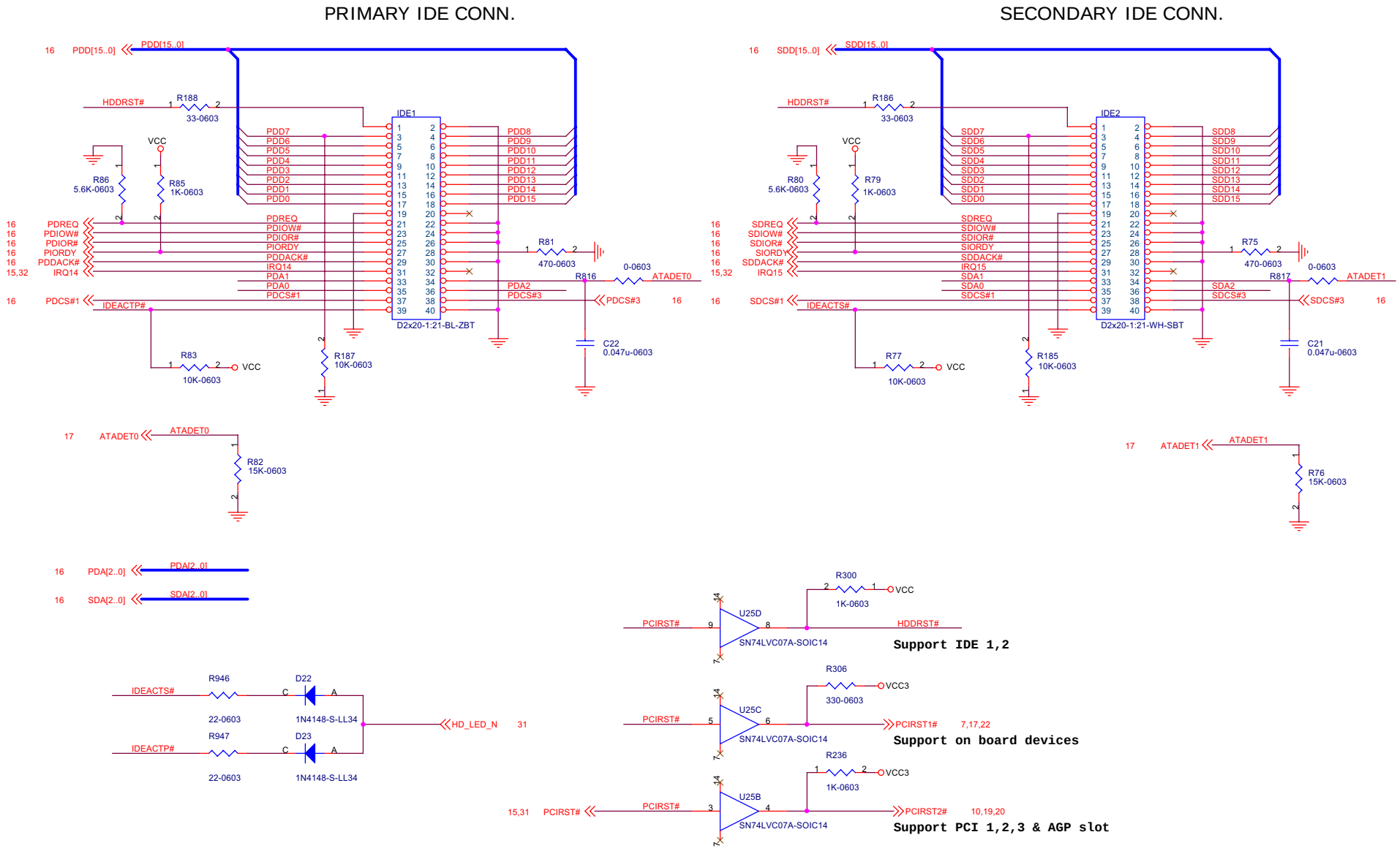

Title	ATA 100 IDE CONNECTOR		
Size	Document Number	MS-6315	Rev 6.00
Date:	Friday, July 20, 2001	Sheet 21 of 33	

Material Number ?

LPC SUPER I/O LPC47M192

FLOPPY DISK HEADER

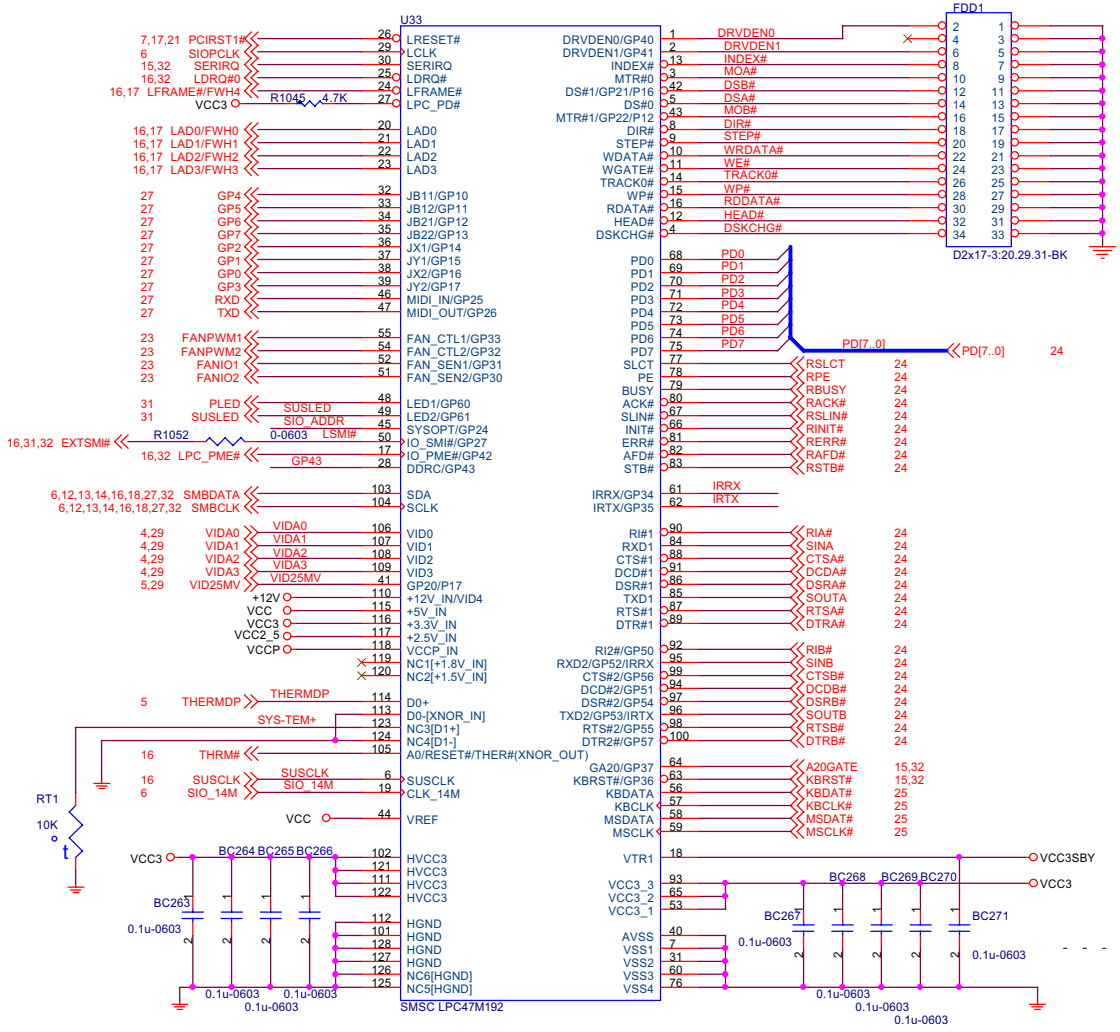

IR HEADER

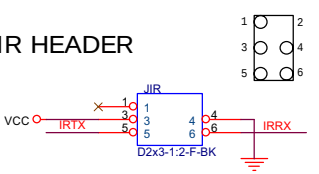

H/W MONITOR DECOUPLING CAPACITORS

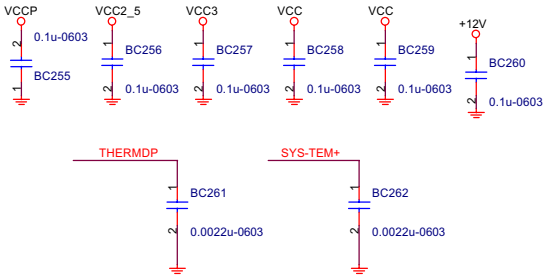

LPC I/O STRAPPING RESISTOR

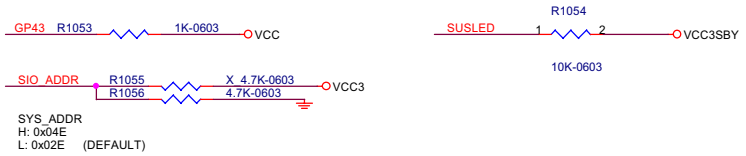

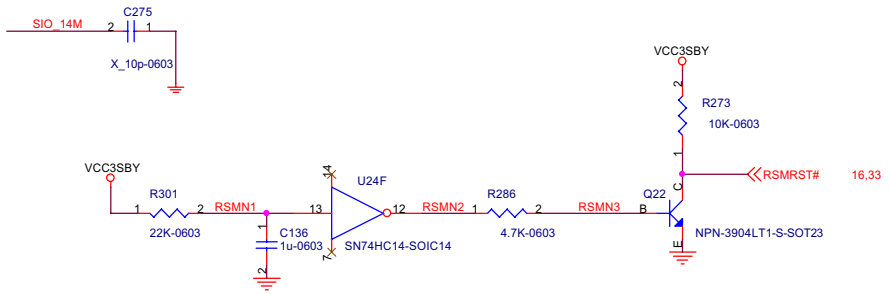

MSI

Title	LPC I/O
Size	Document Number: MS-6315
Rev	6.00
Date:	Friday, July 20, 2001
Sheet	22 of 33

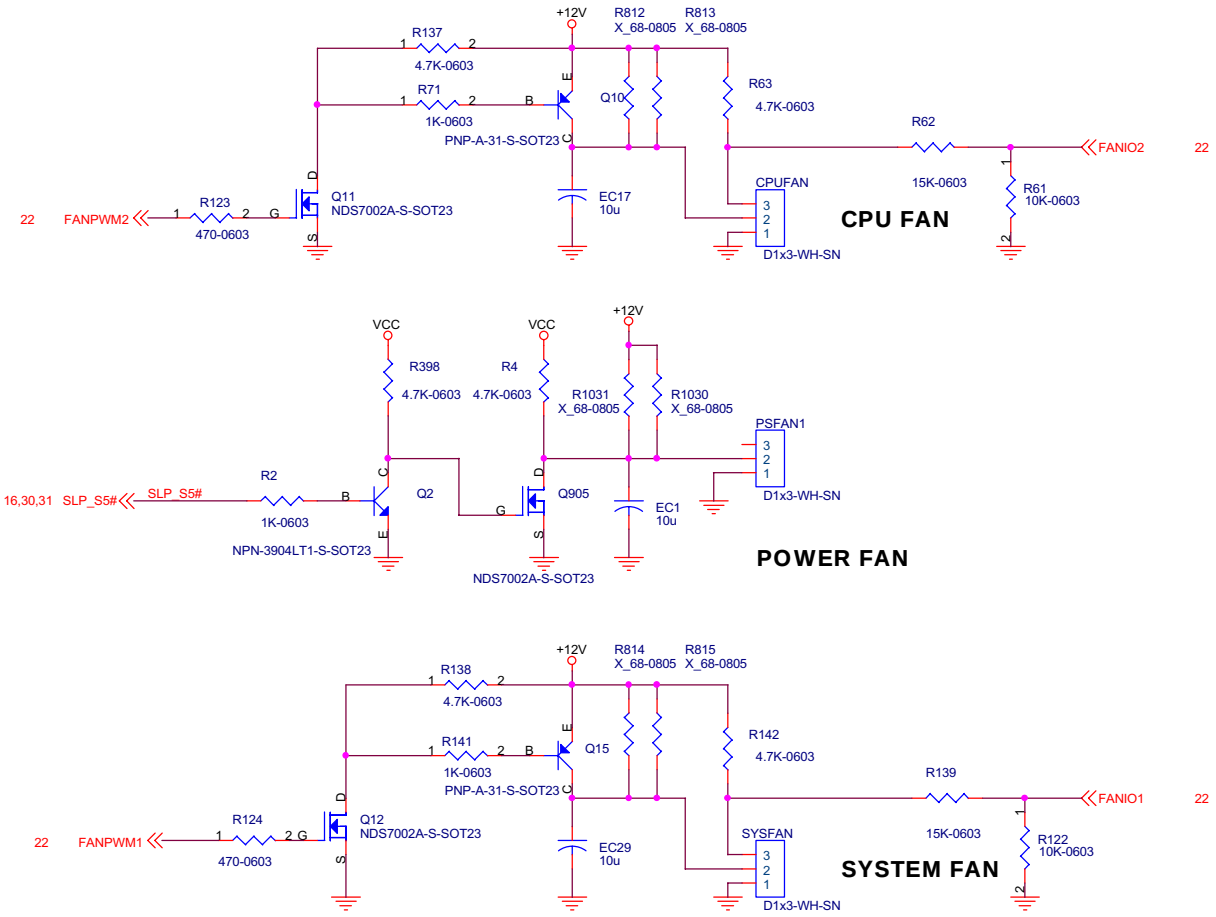

MSI

Title: FAN

Size	Document Number	Rev
	MS-6315	6.00

Date: Friday, July 20, 2001 Sheet 23 of 33

Parallel Port / COM1port & COM2 Header

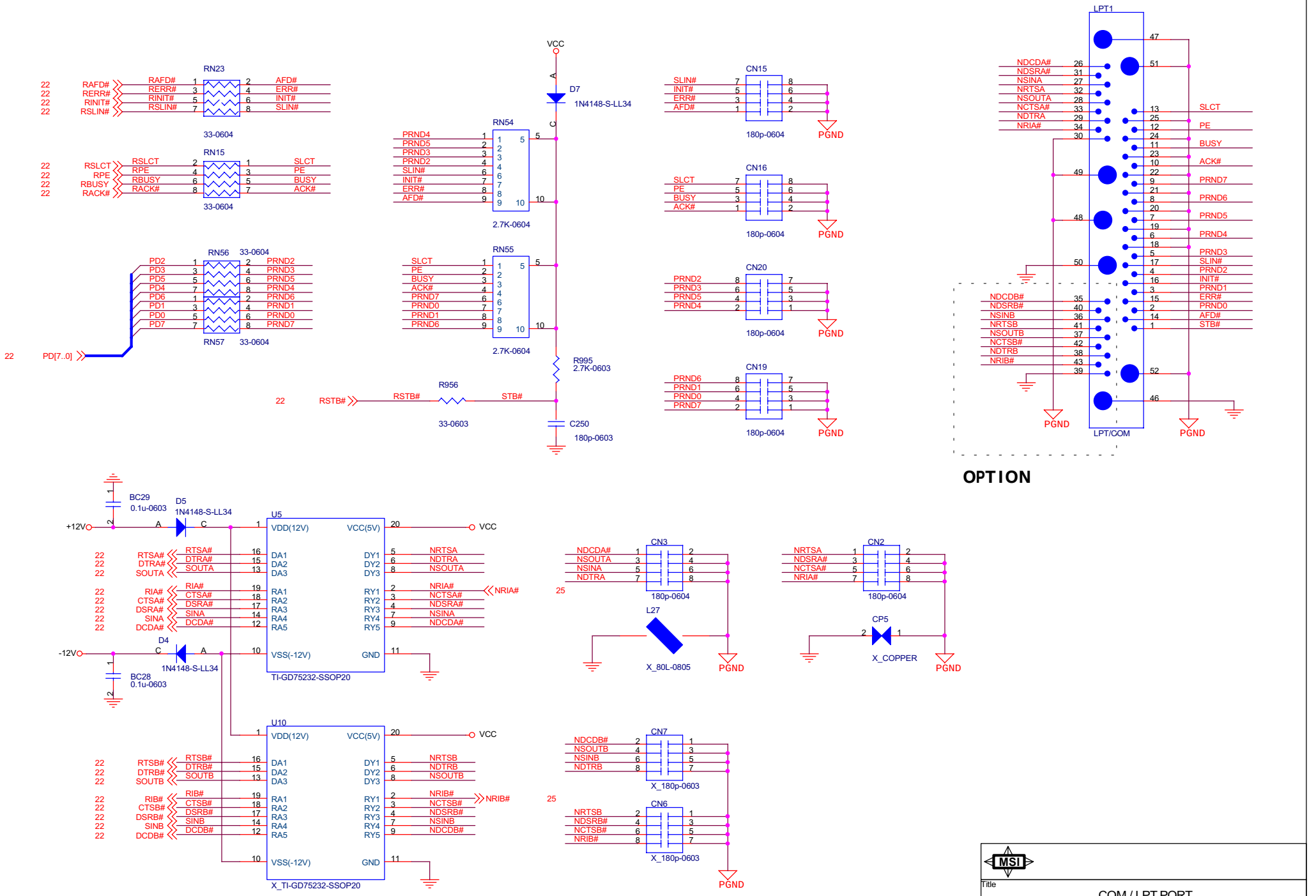

MSI			
Title	COM / LPT PORT		
Size	Document Number MS-6315		Rev 6.00
Date: Friday, July 20, 2001	Sheet 24 of 33		

KEYBOARD/MOUSE PORTS

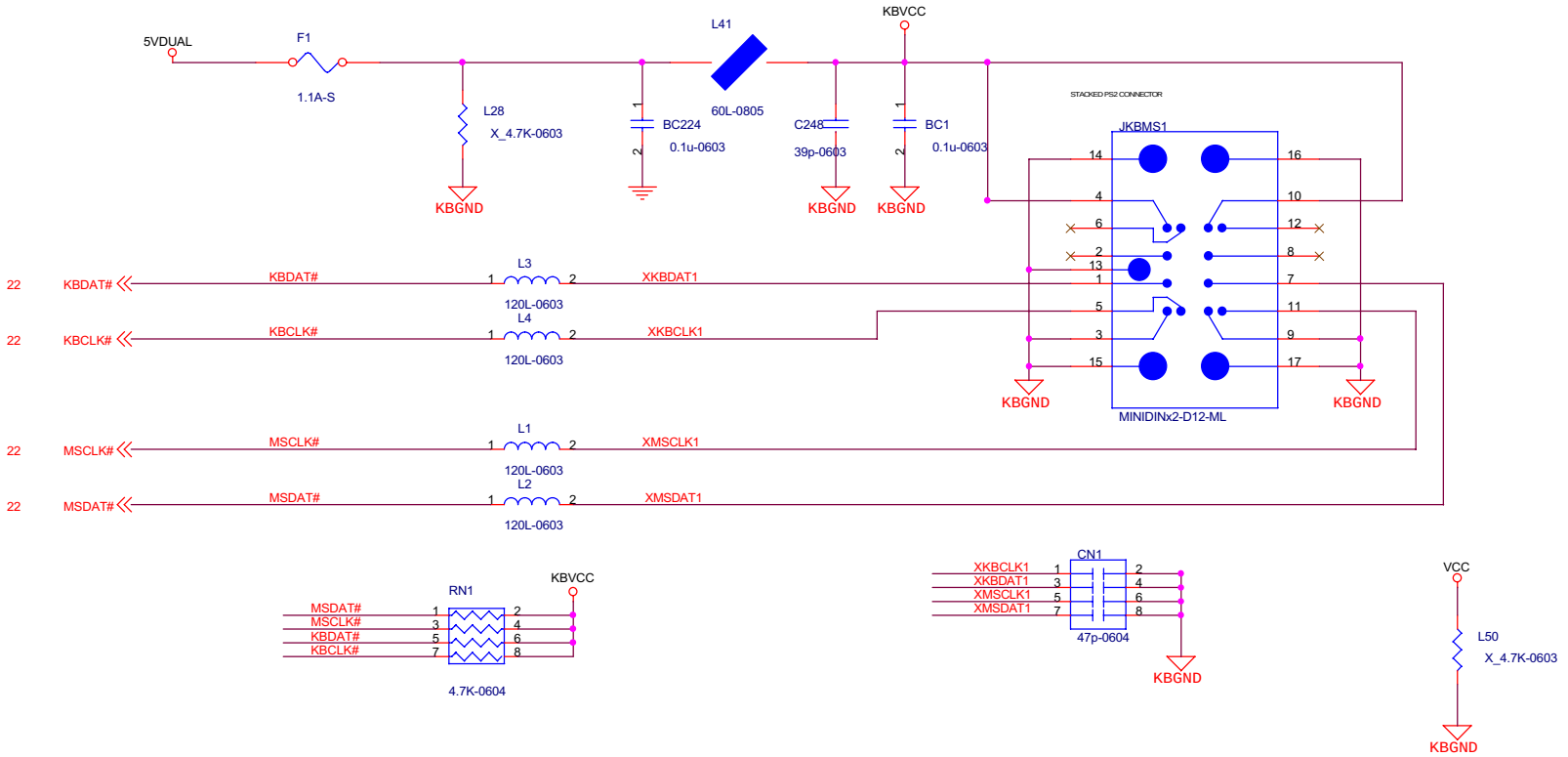

LAN WAKEUP HEADER

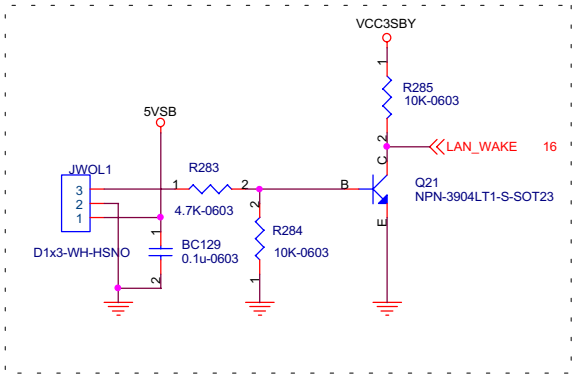

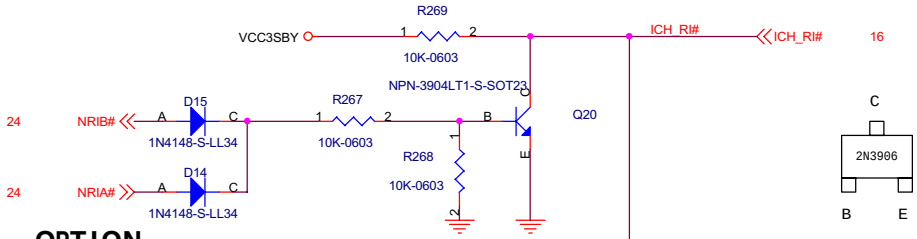

OPTION

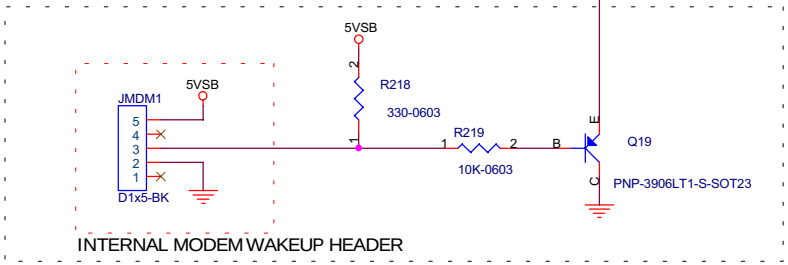

MSI

Title: PS2 PORT

Size	Document Number	Rev
	MS-6315	6.00

Date: Friday, July 20, 2001 Sheet 25 of 33

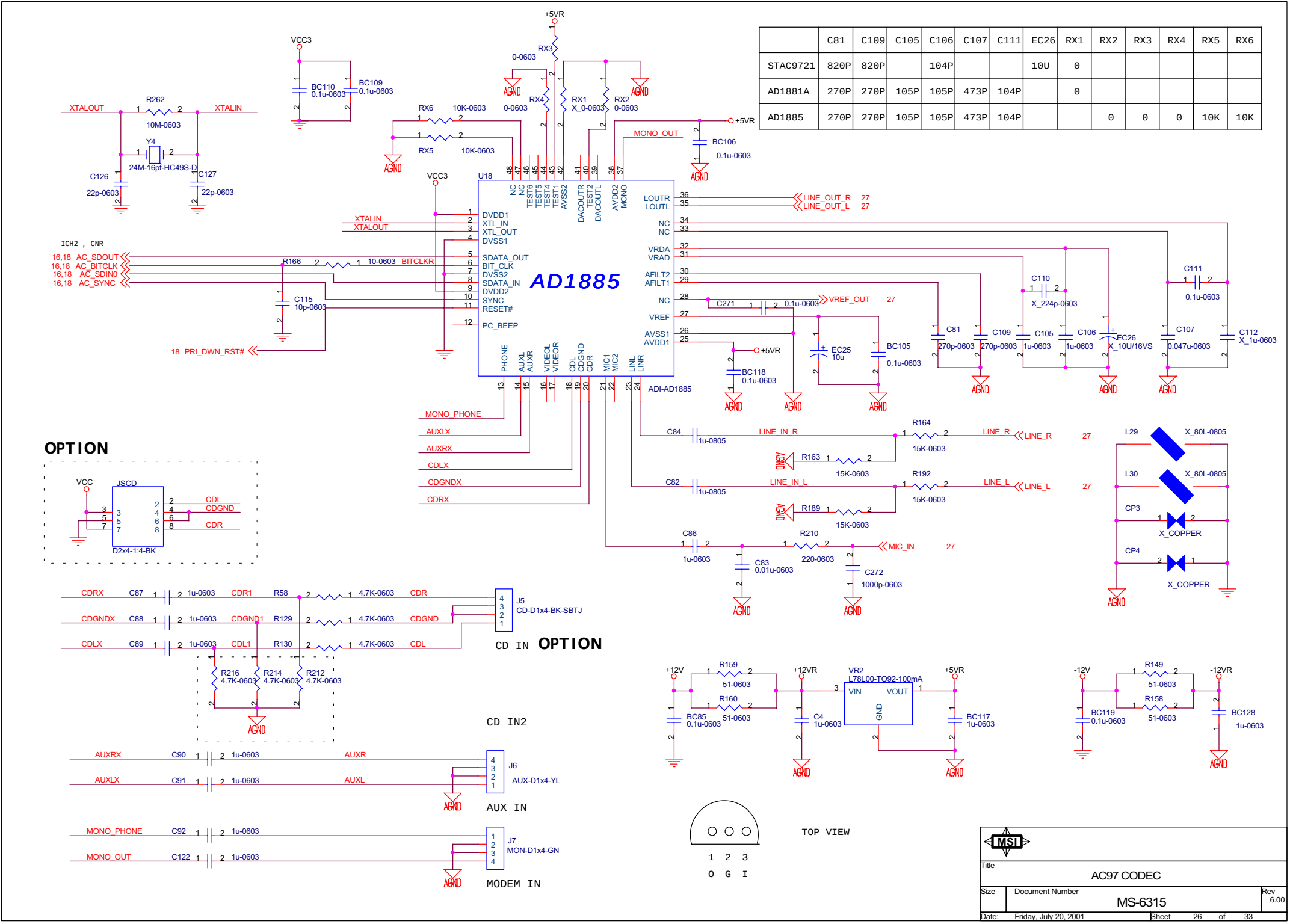

	C81	C109	C105	C106	C107	C111	EC26	RX1	RX2	RX3	RX4	RX5	RX6
STAC9721	820P	820P		104P			10U	0					
AD1881A	270P	270P	105P	105P	473P	104P		0					
AD1885	270P	270P	105P	105P	473P	104P			0	0	0	10K	10K

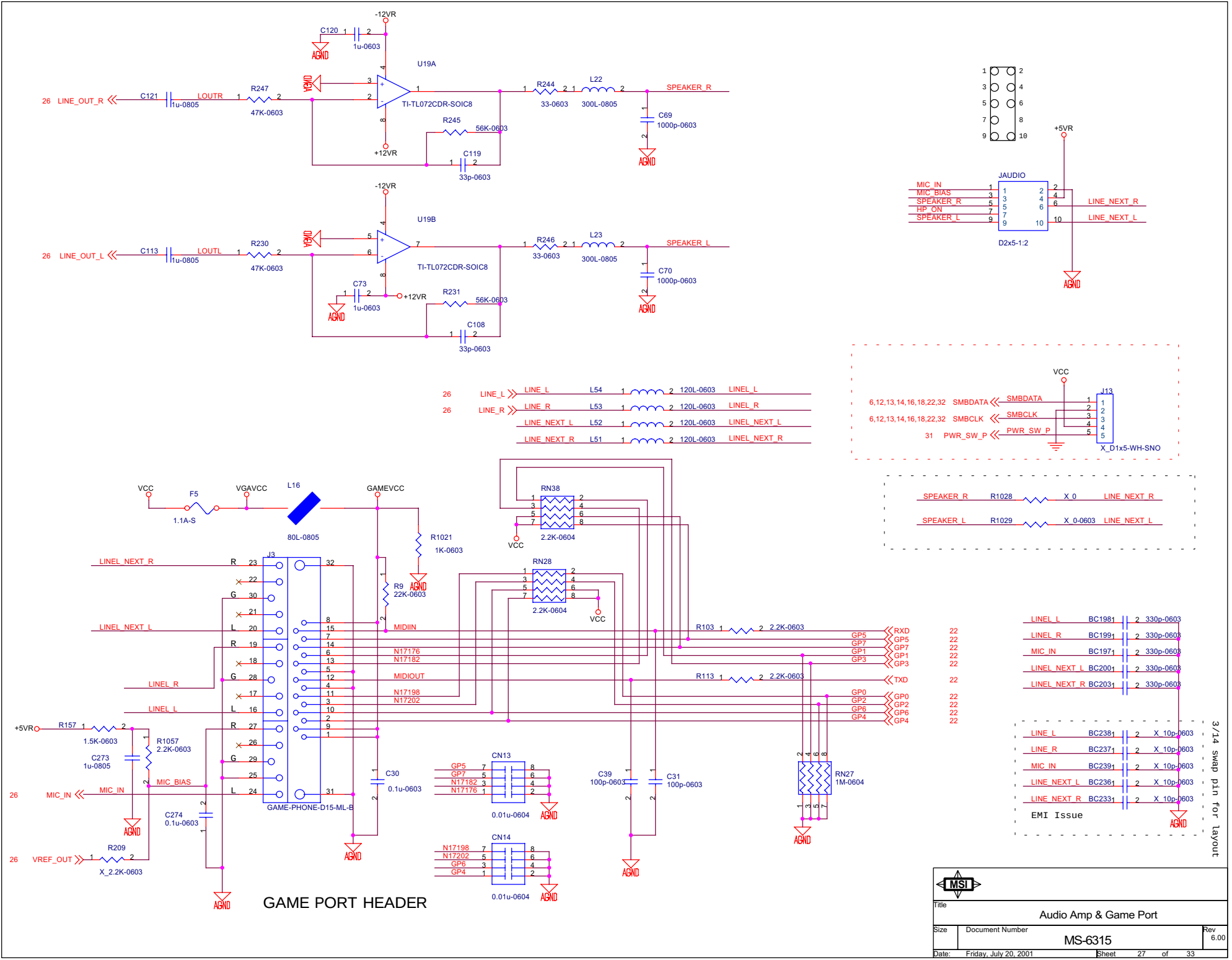
-12VR
C120
1u-0603
AGND
U19A
26 LINE_OUT_R
C121
1u-0805
LOUTR
R247
47K-0603
TI-TL072CDR-SOIC8
R244
33-0603
L22
300L-0805
SPEAKER_R
C69
1000p-0603
R245
56K-0603
+12VR
C119
33p-0603
U19B
26 LINE_OUT_L
C113
1u-0805
LOUTL
R230
47K-0603
TI-TL072CDR-SOIC8
R246
33-0603
L23
300L-0805
SPEAKER_L
C70
1000p-0603
C73
1u-0603
R231
56K-0603
C108
33p-0603
JAUDIO
D2x5-1:2
MIC_IN
MIC_BIAS
SPEAKER_R
HP_ON
SPEAKER_L
+5VR
LINE_NEXT_R
LINE_NEXT_L
26 LINE_L
26 LINE_R
LINE_NEXT_L
LINE_NEXT_R
L54
L53
L52
L51
120L-0603
LINEL_L
LINEL_R
LINEL_NEXT_L
LINEL_NEXT_R
VCC
6,12,13,14,16,18,22,32 SMBDATA
6,12,13,14,16,18,22,32 SMBCLK
31 PWR_SW_P
J13
X_D1x5-WH-SNO
SPEAKER_R R1028 X_0 LINE_NEXT_R
SPEAKER_L R1029 X_0-0603 LINE_NEXT_L
VCC F5 1.1A-S
VGAVCC
L16
80L-0805
GAMEVCC
R1021
1K-0603
RN38
2.2K-0604
RN28
2.2K-0604
R9
22K-0603
MIDIIN
N17176
N17182
MIDIOUT
N17198
N17202
J3
GAME-PHONE-D15-ML-B
R103 2.2K-0603
R113 2.2K-0603
RXD
TXD
GP0
GP2
GP4
GP5
GP7
GP1
GP3
GP6
RN27
1M-0604
+5VR
R157
1.5K-0603
R1057
2.2K-0603
C273
1u-0805
MIC_BIAS
26 MIC_IN
C274
0.1u-0603
26 VREF_OUT
R209
X_2.2K-0603
C30
0.1u-0603
CN13
0.01u-0604
CN14
0.01u-0604
C39
100p-0603
C31
100p-0603
LINEL_L BC198 330p-0603
LINEL_R BC199 330p-0603
MIC_IN BC197 330p-0603
LINEL_NEXT_L BC200 330p-0603
LINEL_NEXT_R BC203 330p-0603
LINE_L BC238 X_10p-0603
LINE_R BC237 X_10p-0603
MIC_IN BC239 X_10p-0603
LINE_NEXT_L BC236 X_10p-0603
LINE_NEXT_R BC233 X_10p-0603
EMI Issue
3/14 swap pin for layout
GAME PORT HEADER
MSI
Title
Audio Amp & Game Port
Size
Document Number
MS-6315
Rev
6.00
Date: Friday, July 20, 2001
Sheet 27 of 33

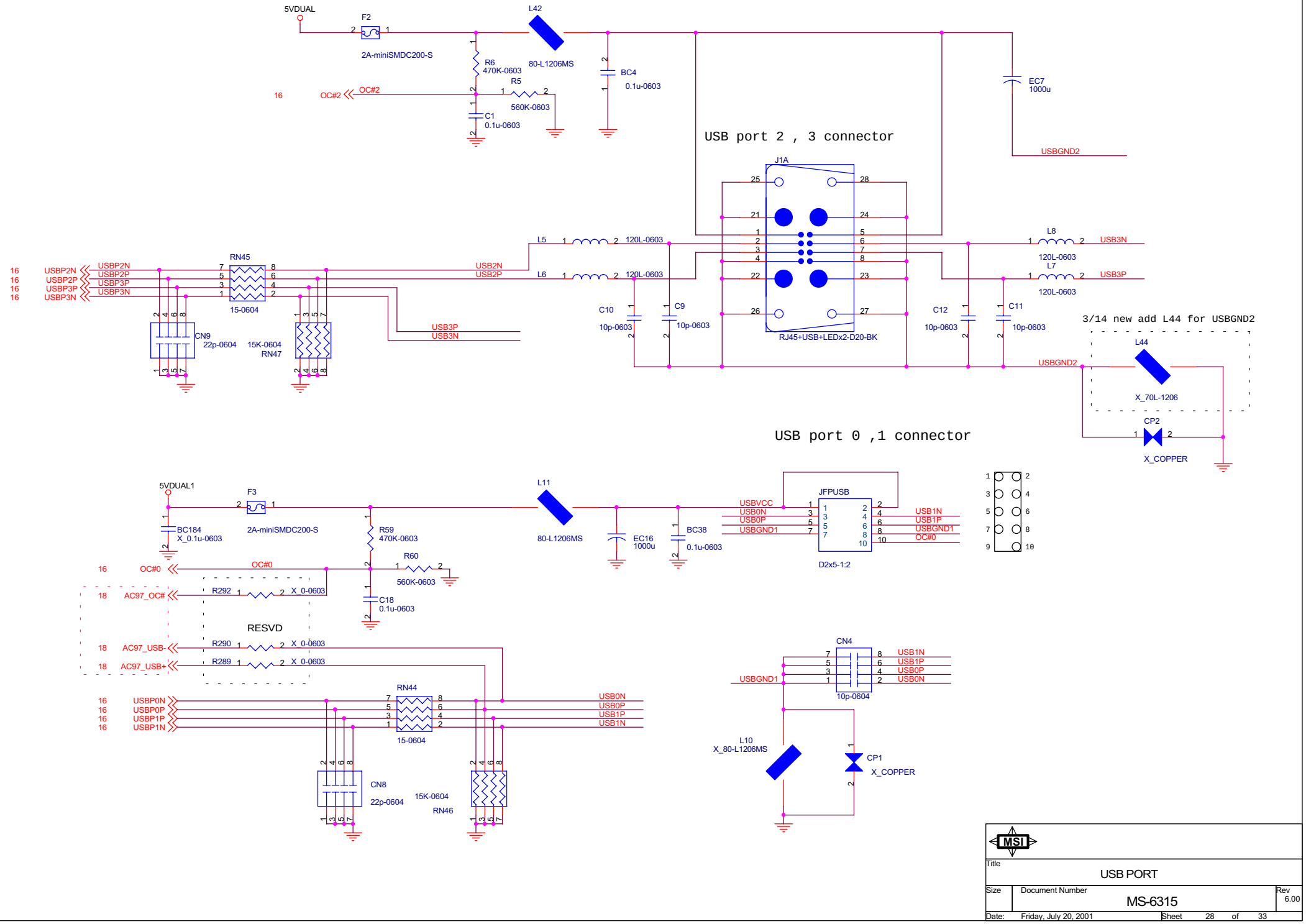

MSI		
Title	USB PORT	
Size	Document Number MS-6315	Rev 6.00
Date: Friday, July 20, 2001	Sheet 28 of 33	

VRM 8.5

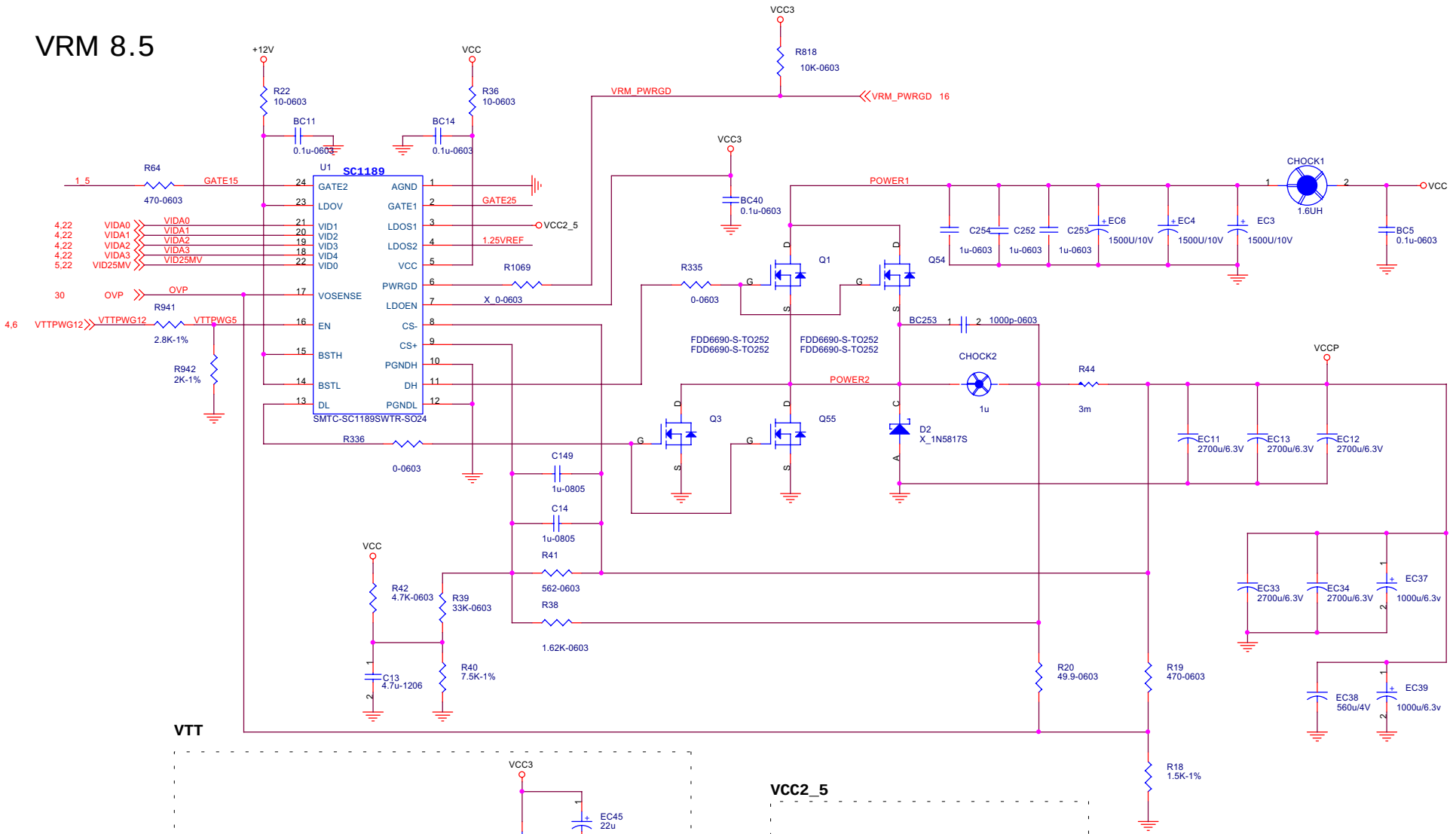

Title	VRM 8.5	
Size	Document Number MS-6315	Rev 6.00
Date: Friday, July 20, 2001	Sheet 29 of 33	

3.3V DUAL POWER TRANSLATOR

(100mils trace / 20 mils space)

3VDUAL

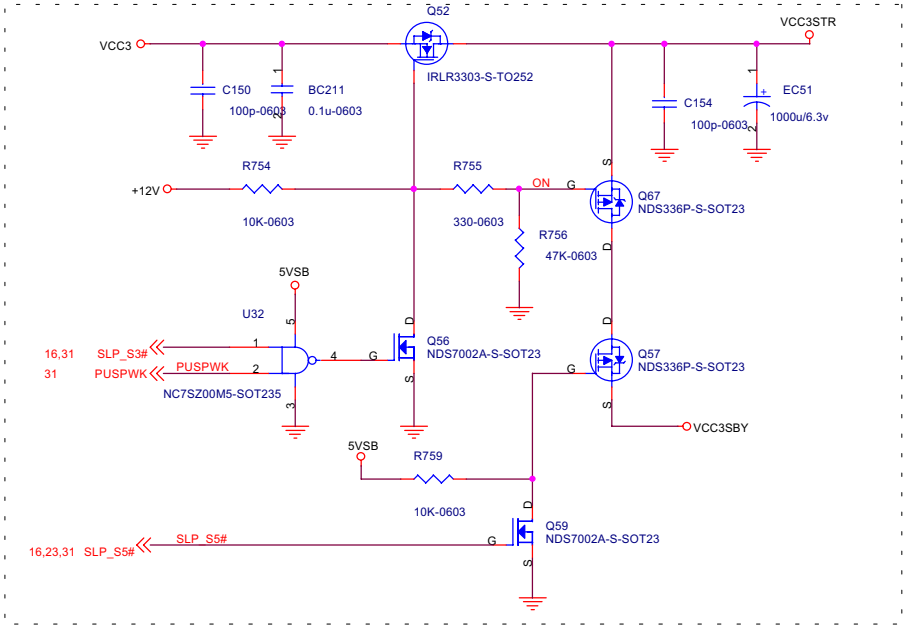

5VDUAL

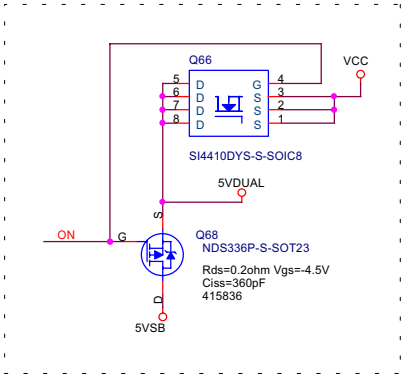

5VDUAL1

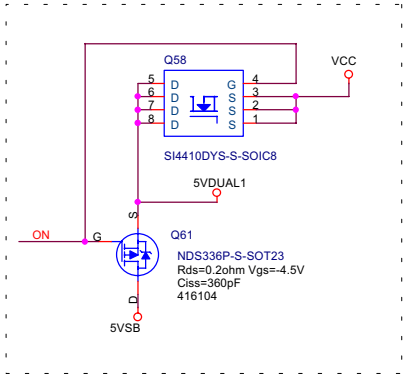

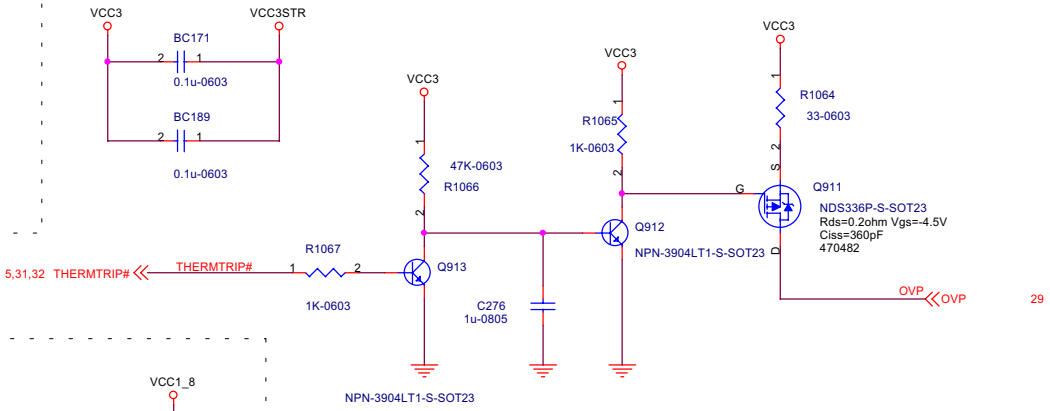

VCMOS

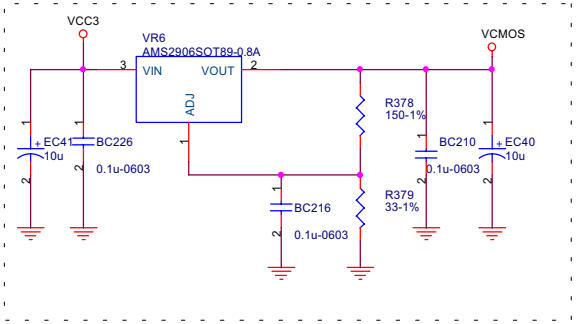

VCC18

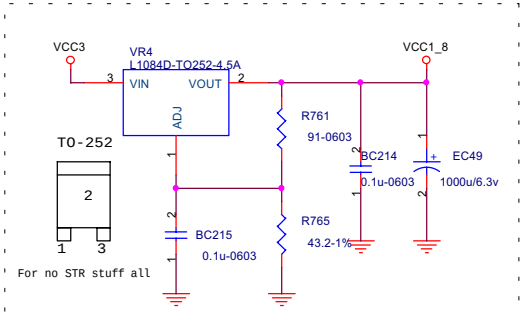

VCC3 SBY

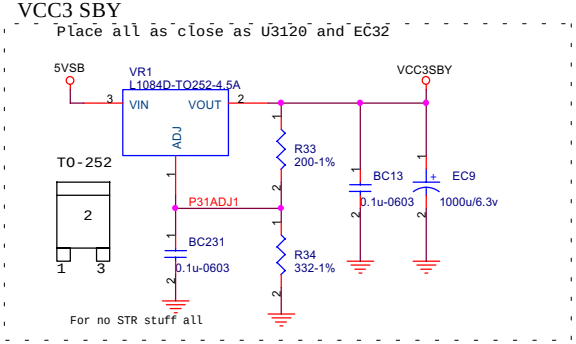

VCC18 SBY

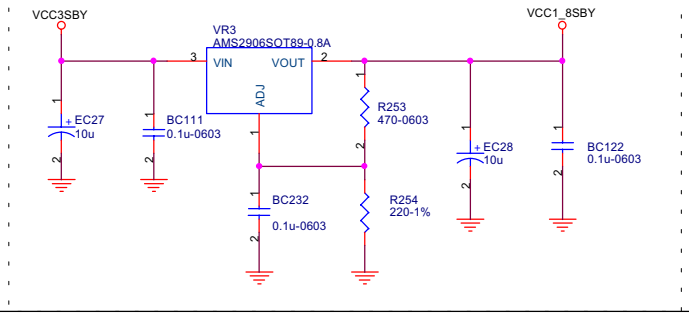

MSI

Title: VOLTAGE REQULATORS

Size	Document Number	Rev
	MS-6315	6.00

Date: Friday, July 20, 2001 Sheet 30 of 33

Power Connector

BULK POWER DECOUPLING

3/14 change part reference

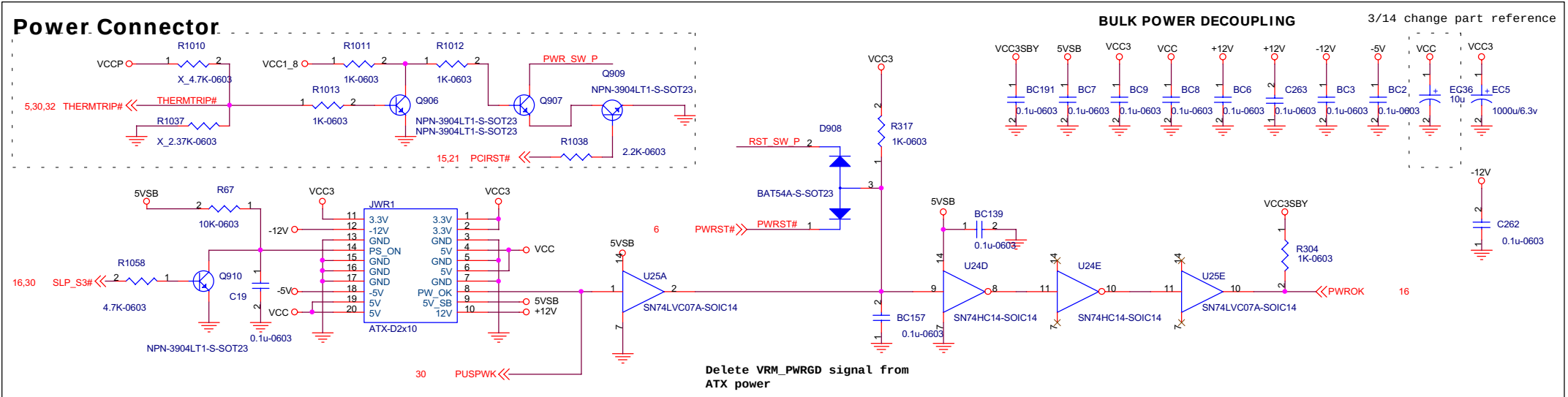

Delete VRM_PWRGD signal from ATX power

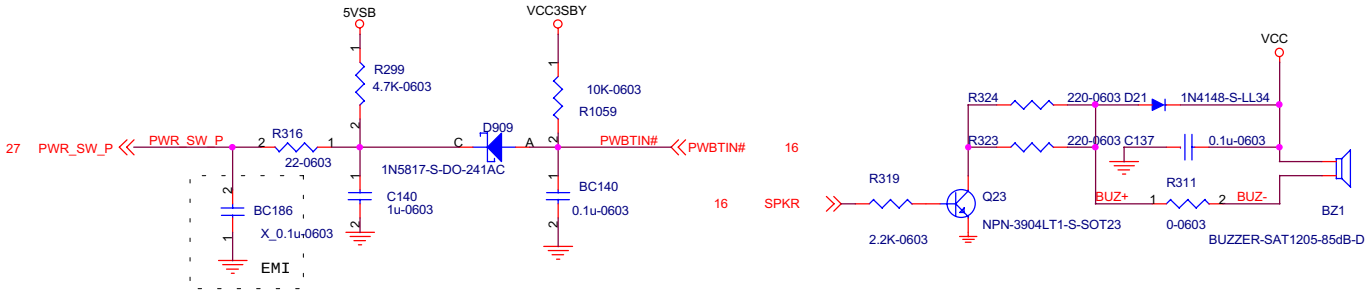

States for a Single-Color Power LED

LED State	Description	ACPI State
Off	Sleeping or power off	S1 , S3 , S5
Steady Green	Running	S0
Blinking Green	Running/message waiting	S0

States for a Dual-Color Power LED

LED State	Description	ACPI State
Off	Power off	S5
Steady Green	Running	S0
Blinking Green	Running/message waiting	S0
Steady Yellow	Sleeping	S1 , S3
Blinking Yellow	Sleeping/message waiting	S1 , S3

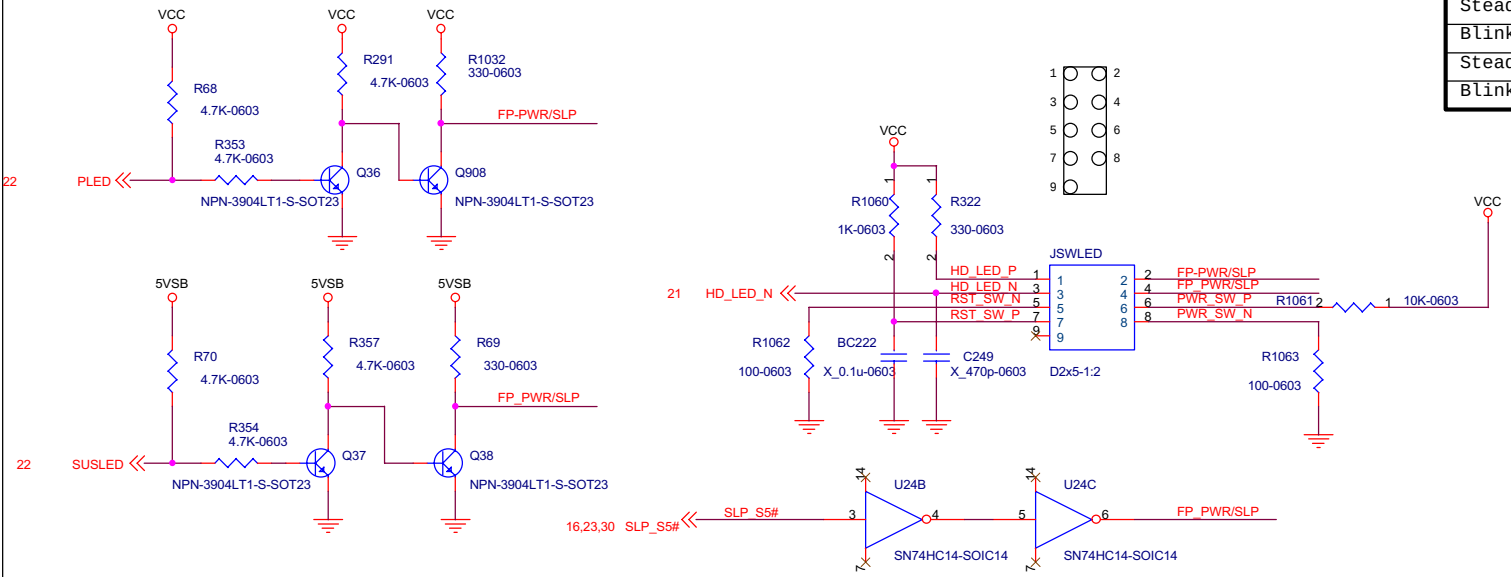

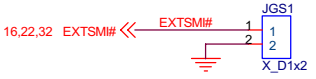

MSI

Title: FRONT PANEL / POWER CONNECTOR

Size	Document Number	Rev
	MS-6315	6.00

Date: Friday, July 20, 2001 Sheet 31 of 33

PULL-UP RESISTORS

PCI BUS

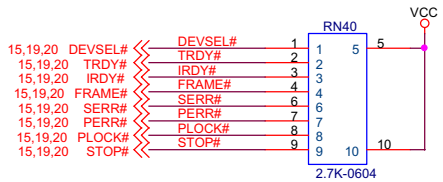

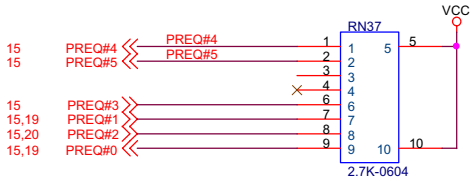

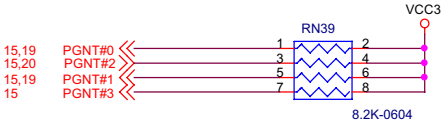

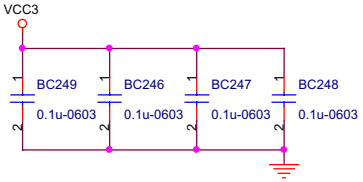

ICH

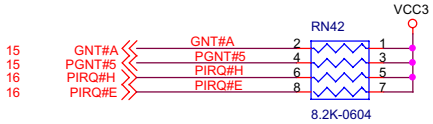

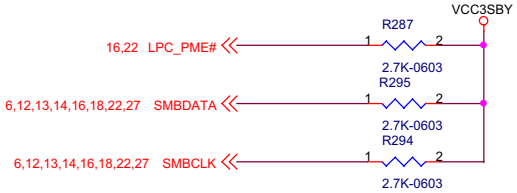

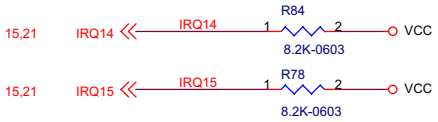

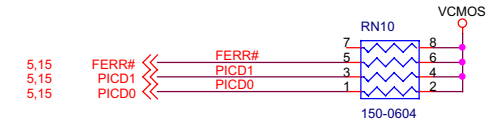

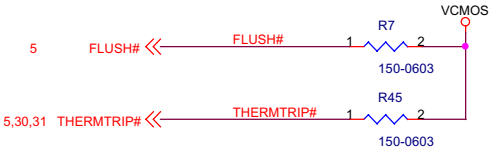

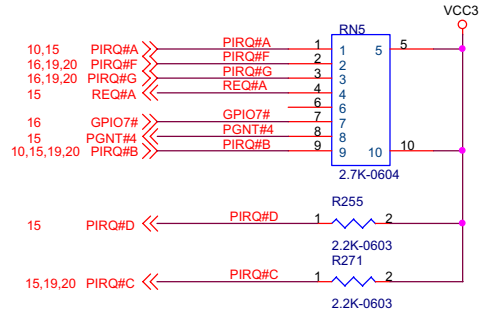

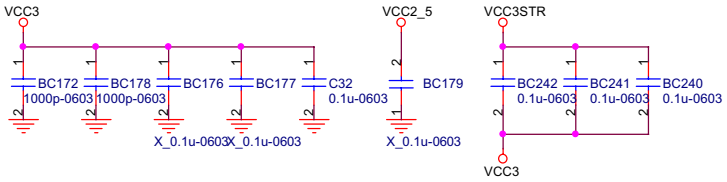

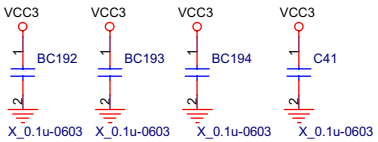

CPU VCORE Bypass Capacitor put in CPU socket

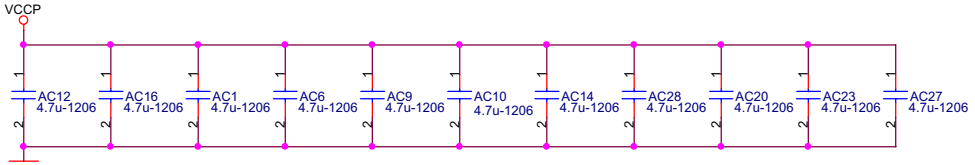

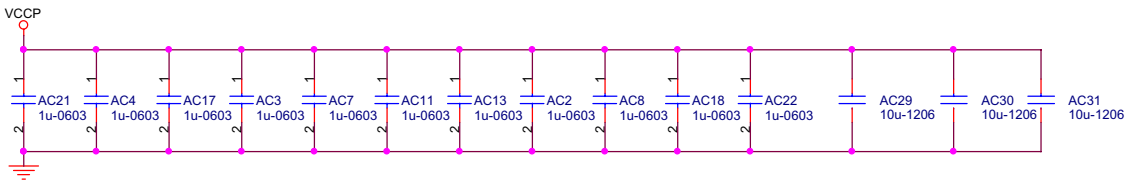

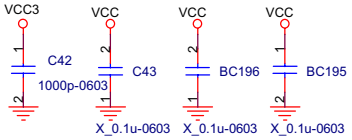

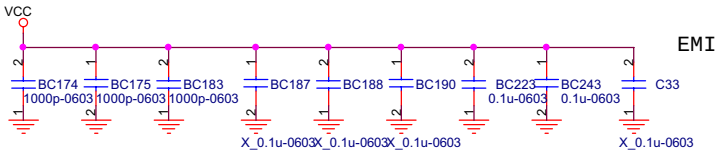

EMI

MSI

Title: PULL UP RESISTORS

Size | Document Number: MS-6315 | Rev: 6.00

Date: Friday, July 20, 2001 | Sheet 32 of 33

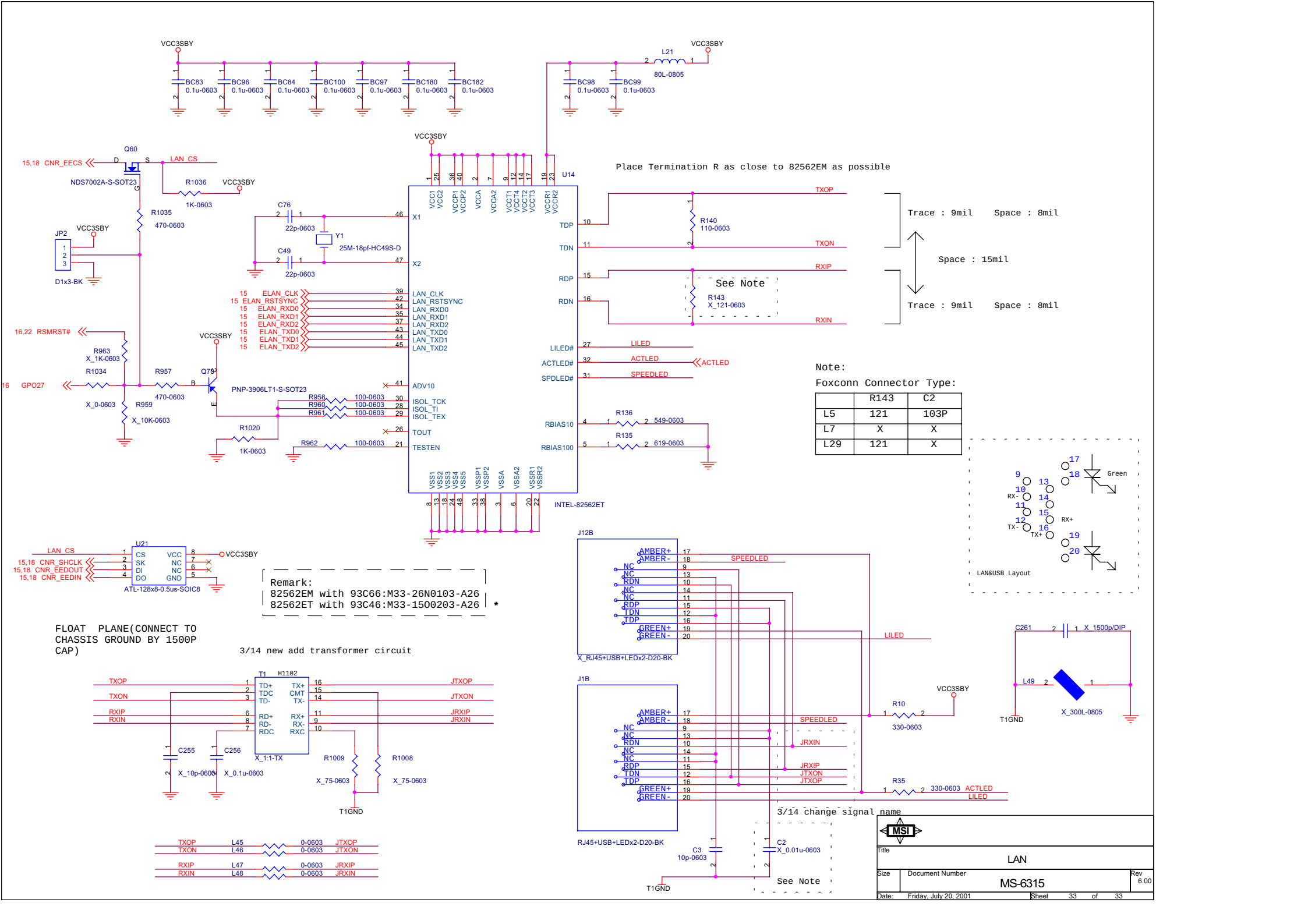

	R143	C2
L5	121	103P
L7	X	X
L29	121	X

JP2(1-2)

JC-D2-GN

JP4(1-2)

JC-D2-GN

JP5(1-2)

JC-D2-GN

JBAT1(1-2)

JC-D2-RD

JAO(5-6)

JC-D2-GN

JAO(9-10)

JC-D2-GN

COM1

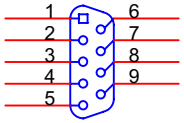

COM-D9-GN

COM2

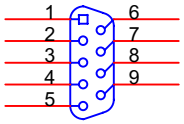

X_COM-D9-GN

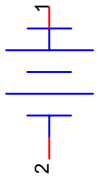

BAT2-1
BAT-CR2032-3V-210mAh

PCB

PCB
P01-6315600
PCB, M/B, 6315,6.00,24.5X21.8

AGP1-1

Retention
E91-0000021-H06
Mech,Retention,RetentionModule,83.2mmX18.5mm,LeftLock,ForAGPCard

U26-1

SST-256K*8-33MHz-PLCC32
M31-49002A8-S20
M-IC,FLASH,2M(256K*8)/33MHz,PLCC-32,SST/SST49LF002A,3.0~3.6V,FirmwareHubFlash

MSI

Title	MANUAL	
Size	Document Number MS-6315	Rev 6.00
Date: Friday, July 20, 2001	Sheet 34 of 34	

MS-6315 Micro-ATX

Intel PPGA 370 Processor

Intel Solano2 Chipset

Winbond 83627HF-AW LPC I/O

Creative CT5880 Controller 4-Speaker

ICH2 LAN Controller + Kinnereth Plus

Model option table

Model type	Function	Part Mark
MS6315	Stantard will be del	X_????
Option A	With/ CT5880	A_????
Option L	With/ LAN on board	L_????
Option H	With/ Hardware monitor	H_????
Option G	For Legend only	G_????

Stantard+W/LAN ,W/ HW Monitor , W/STR

Title	Page
Cover Sheet	1
Block Diagram	2
GPIO SPEC	3
370PGA Socket	4,5
GTL Termination	6
Clock Synthesizer	7
GMCH	8,9,10
AGP / AIMM Display Cache	11
Graphics Connectors	12
System Memory	13,14
ICH	15,16
FWH	17
CNR Riser	18
PCI Connectors	19,20
ATA66 Connectors	21
LPC I/O	22
Hardware monitor	23
Parallel / Serial Port	24
Keyboard/Mouse Connectors	25
PCI Audio Controllor	26
AC'97 Codec	27
Audio/Game Port	28
USB HUB & USB Connectors	29
VRM 8.4	30
Voltage Regulators	31
Front Panel	32
Pull-up Resistors	33
LAN	34
History	

Block Diagram

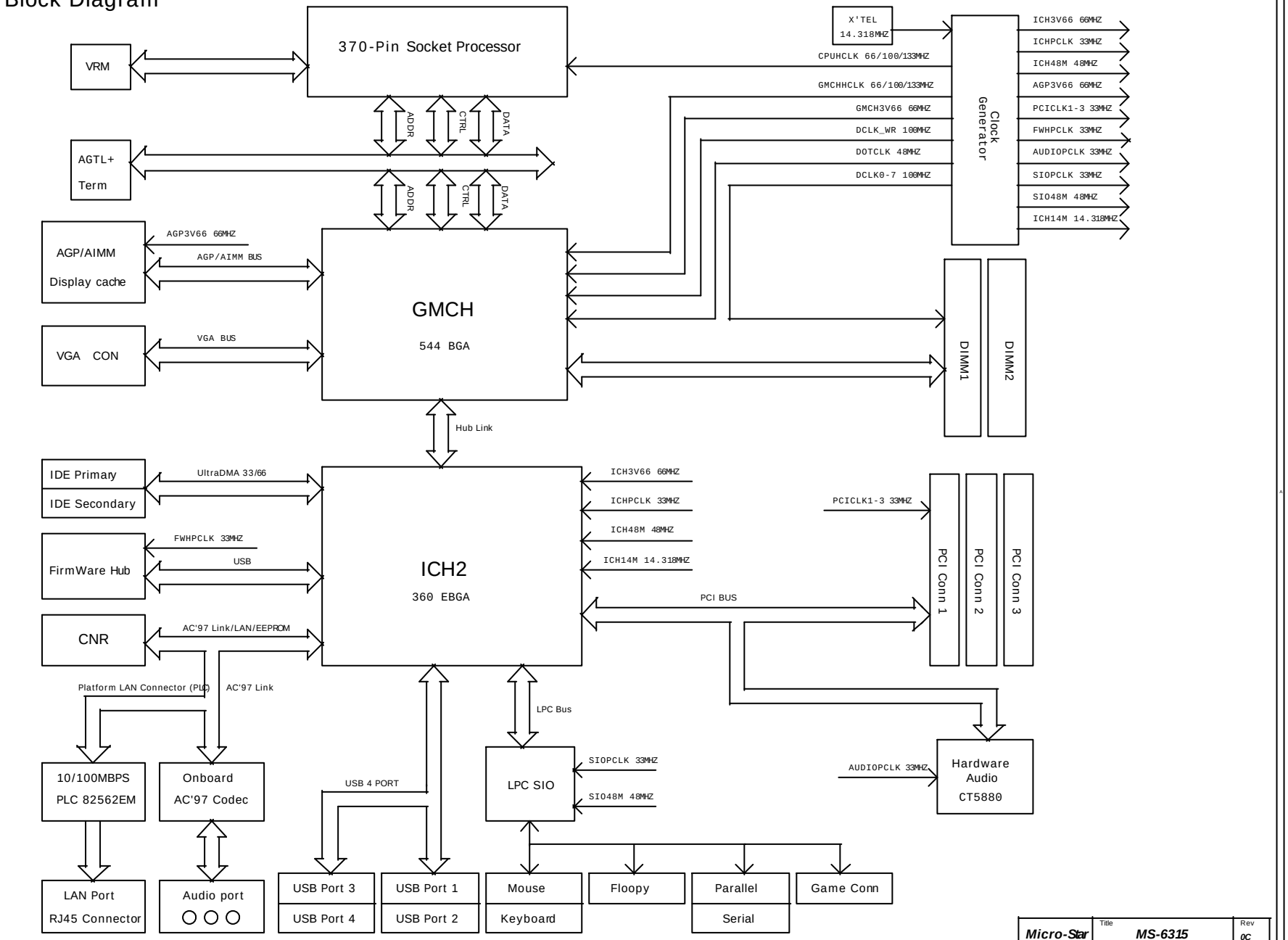

Micro-Star	Title: MS-6315	Rev: 0C
Document Number: Block Diagram		
Last Revision Date: Tuesday, August 01, 2000	Sheet 2 of 34	

General Purpose I/O Spec.

ICH

GPIO Pin	Type	Function
GPIO 0	I	Pull up (REQ#A)
GPIO 1	I	PREQ#5
GPIO 2~4	I	NC
GPIO 5	I	NC
GPIO 6	I	NC
GPIO 7	I	NC
GPIO 8	I	LAN Wake Up
GPIO 9	I	Not Implemented
GPIO 10	I	Not Implemented
GPIO 11	I	SMB_ALERT
GPIO 12	I	External SMI
GPIO 13	I	LPC PME
GPIO 14~15	I	Not Implemented
GPIO 16	O	Pull up(GNT#A)
GPIO 17	O	PGNT#5
GPIO 18~20	O	NC
GPIO 21	O	FAN Ctrl
GPIO 22	O	Pullup
GPIO 23	OD	BIOS update lock(H)/unlock(L)
GPIO 24	O	NC
GPIO 25	O	NC
GPIO 26	O	Not Implemented
GPIO 27	I/O	NC
GPIO 28	I/O	NC
GPIO 29~31	I/O	Not Implemented

PCI Config.

DEVICE	ICH INT Pin	IDSEL
PCI Slot 1	INTA# INTB# INTC# INTD#	AD16
PCI Slot 2	INTB# INTC# INTD# INTA#	AD17
PCI Slot 3	INTC# INTD# INTA# INTB#	AD18
CT5880	INTC#	AD26

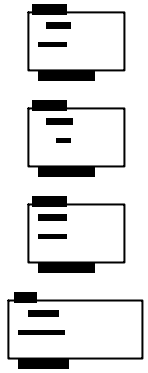

CLKVCC3 = VCC3

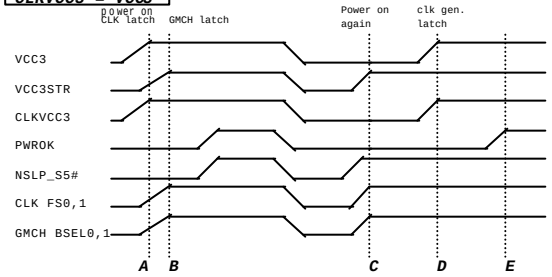

CLKVCC3 = VCC3STR

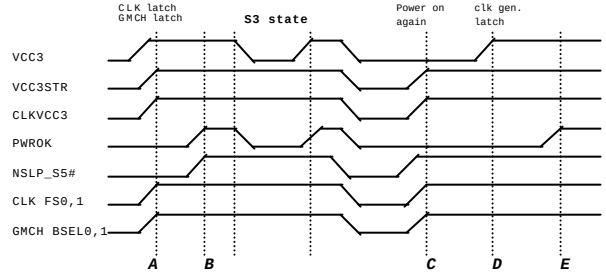

FWH

GPIO Pin	Type	Function
GPI 0	I	ATA IDE 1 Detect
GPI 1	I	ATA IDE 2 Detect
GPI 2	I	GPI2=L GPI3=H Flash from FDD
GPI 3	I	GPI2=H GPI3=L Boot Auto clear CMOS

ICH2 SMLINK0,1 Connect to PCI2 for PCI card AOL

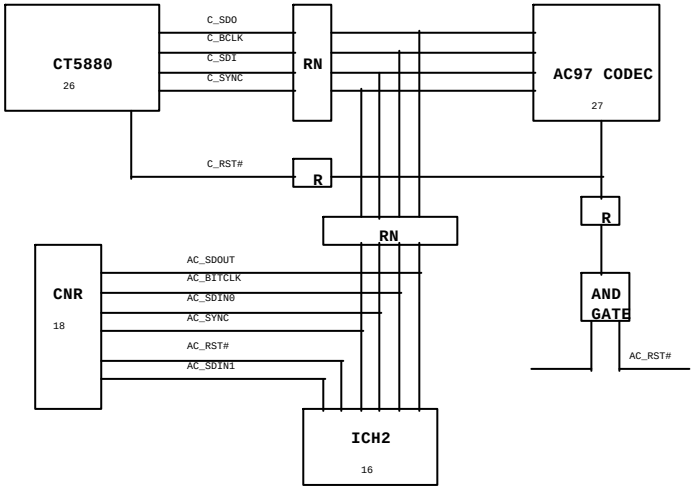

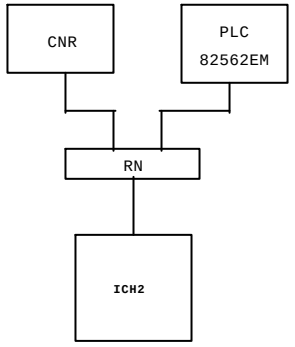

Micro-Star	MS-6315	100
BIOS GPIO SPEC.		
Friday, November 24, 2000	3	34

370PGA Socket Part 1

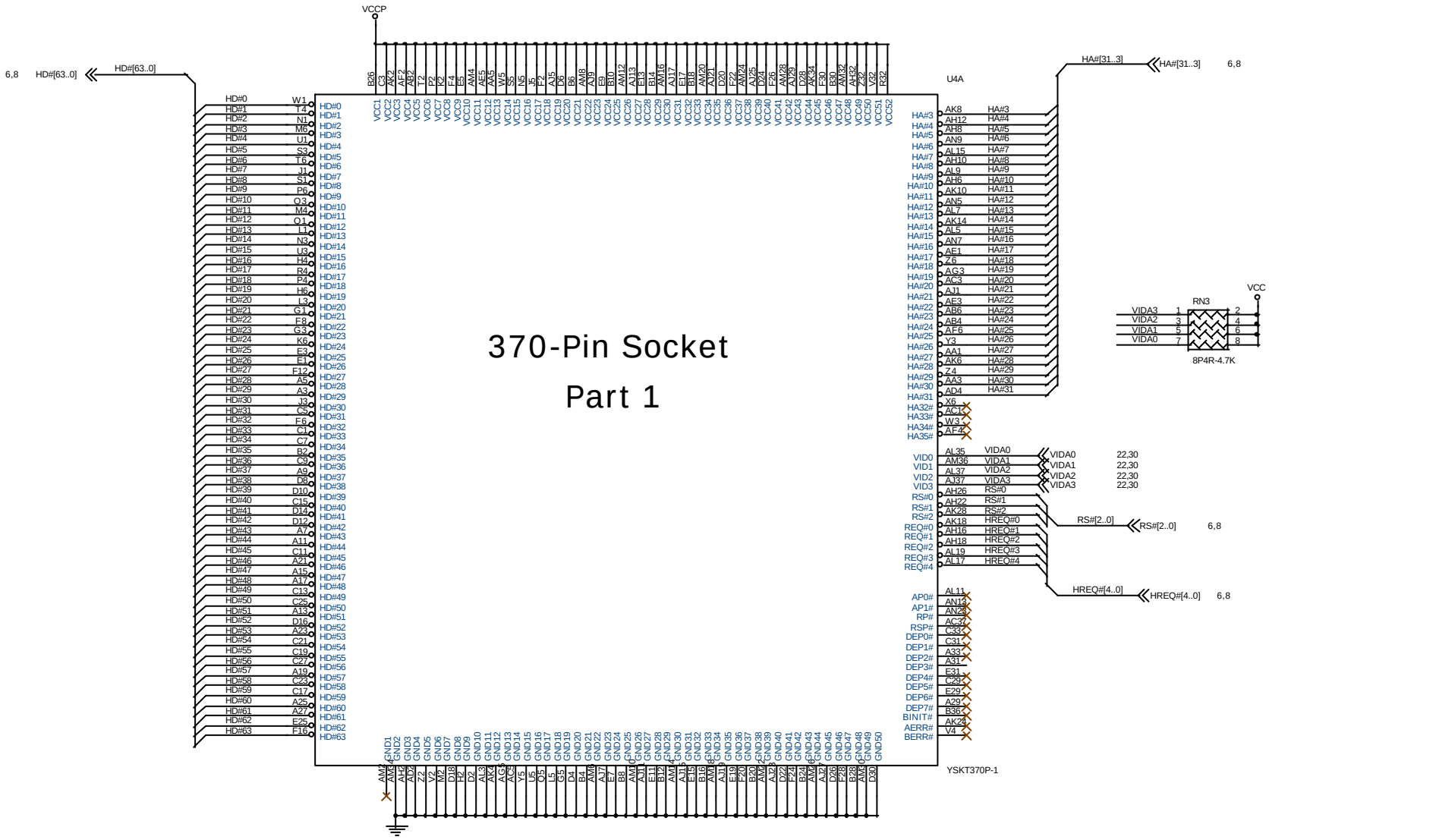

Micro-Star	Title: MS-6315		Rev: 100
Document Number: SOCKET 370 PGA-1			
Last Revision Date: Tuesday, August 01, 2000		Sheet 4 of 34	

370PGA Socket Part 2

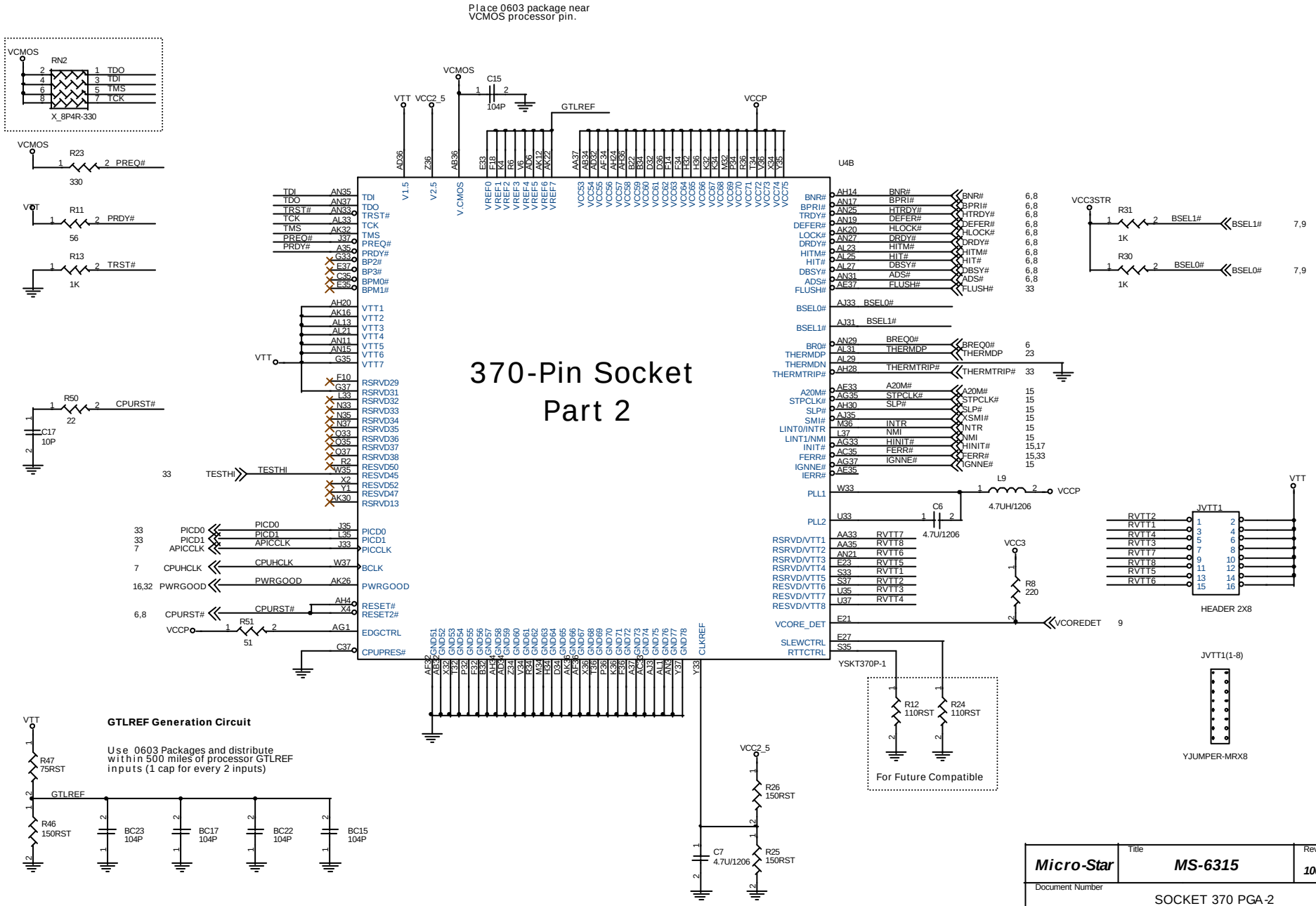

Micro-Star	Title: MS-6315	Rev: 100
Document Number: SOCKET 370 PGA-2		
Last Revision Date: Wednesday, August 02, 2000	Sheet 5 of 34	

GTL Termination

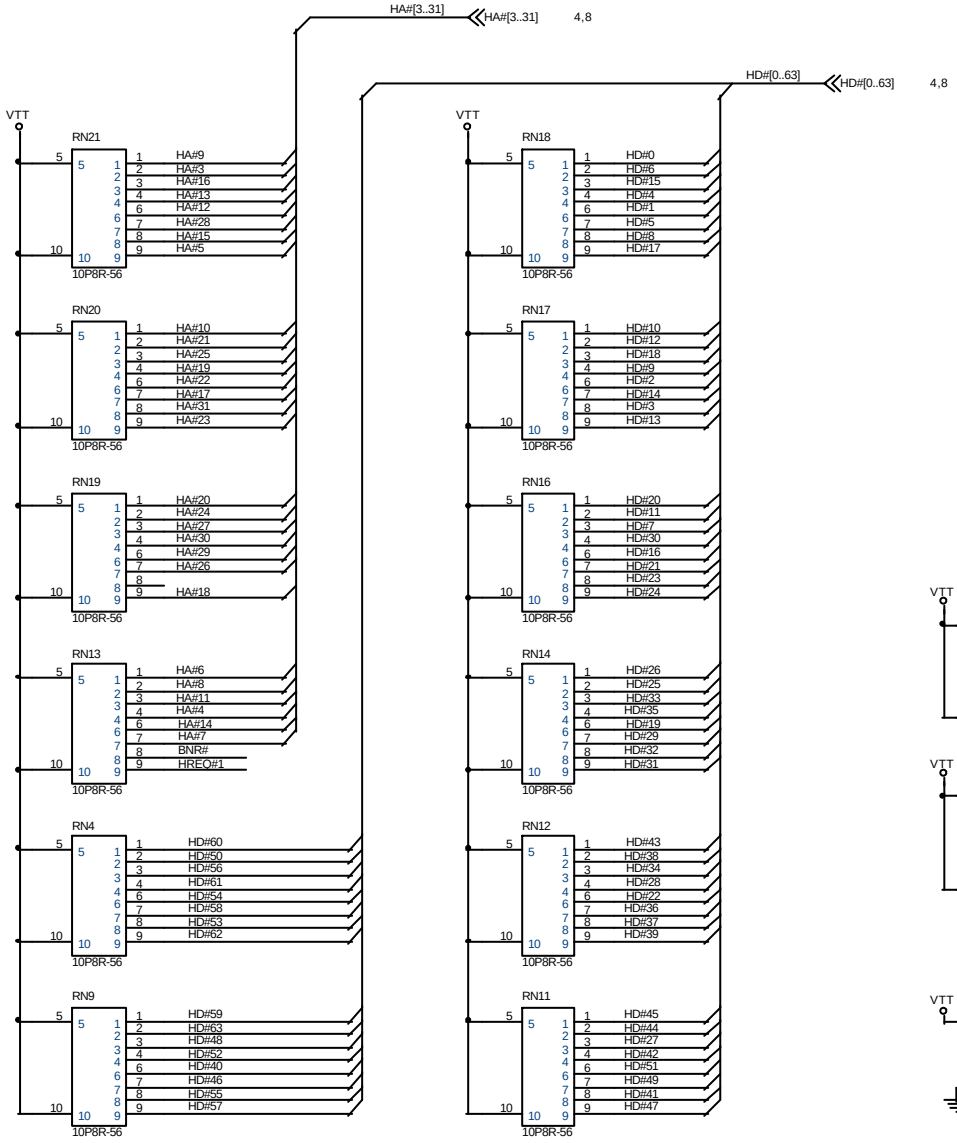

GTL VTT Bypass Capacitor

Every two R-packs add one 0.1U Cap.

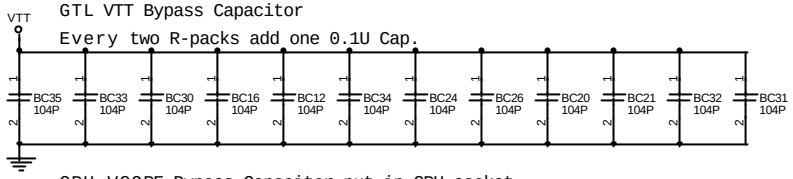

CPU VCORE Bypass Capacitor put in CPU socket

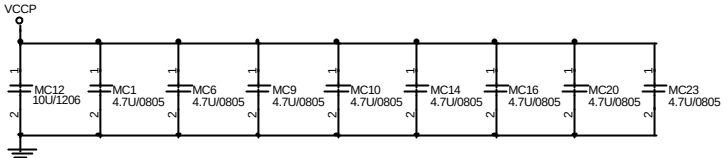

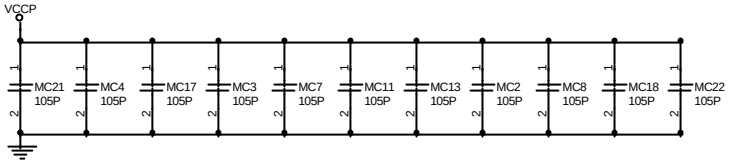

For VCCP

11 PCS 105P Cap. Placement

9 PCS 4.7U/0805 Cap. Placement

1 PCS 10U/1206 Cap. Placement

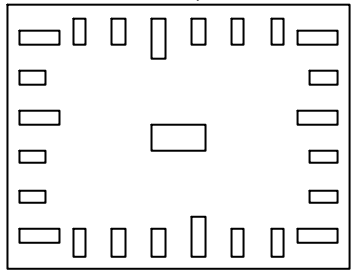

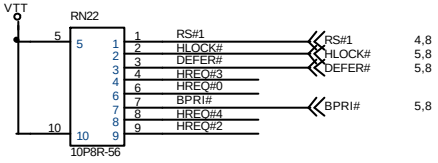

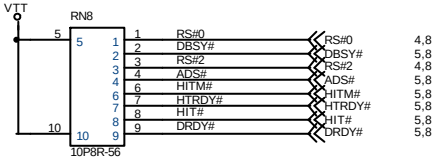

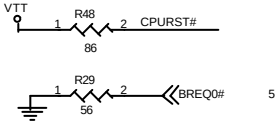

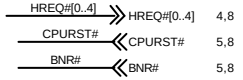

Micro-Star	Title: MS-6315	Rev: 100
Document Number: GTL Termination		
Last Revision Date: Tuesday, August 01, 2000	Sheet 6 of 34	

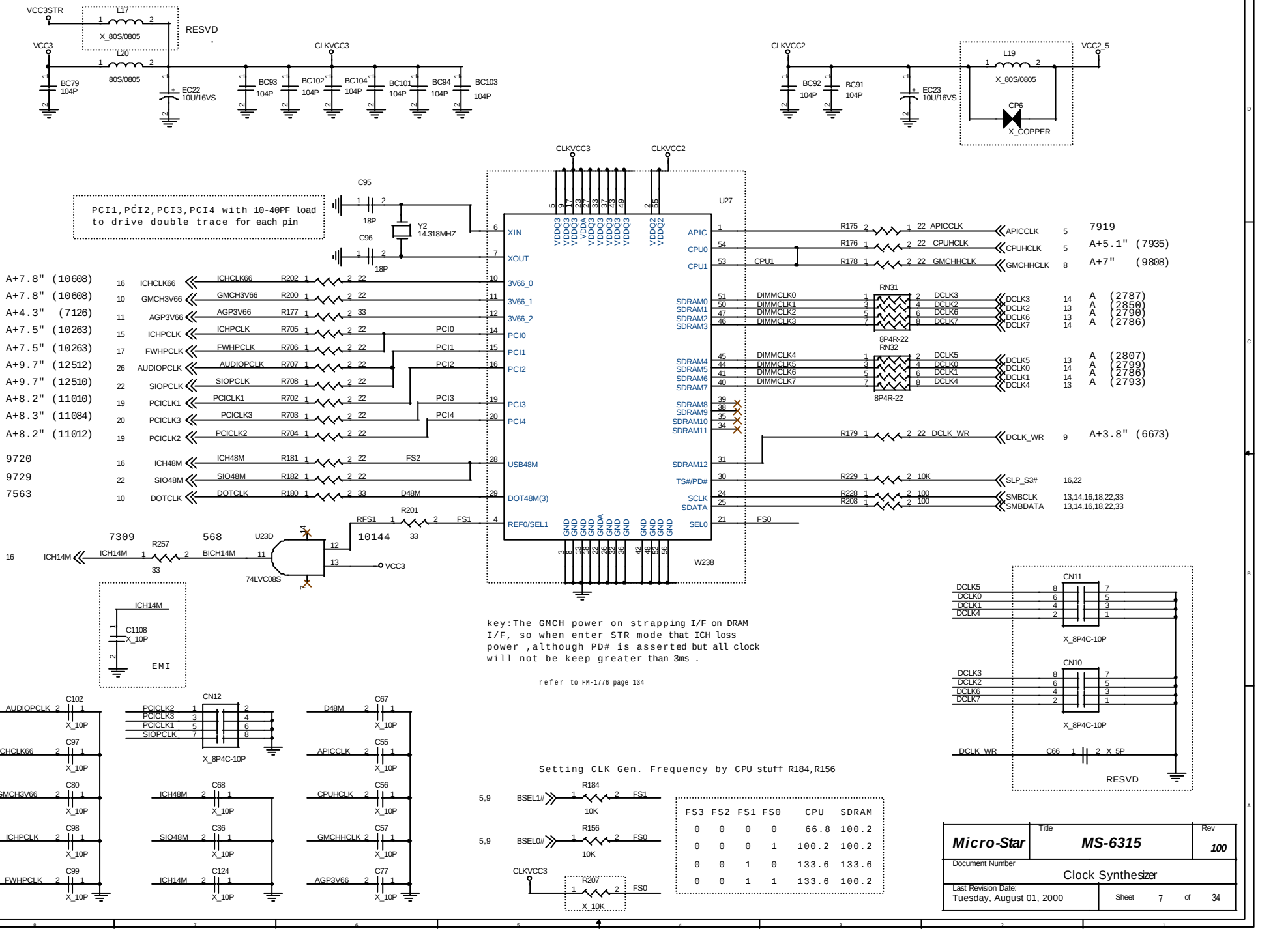
VCC3STR
L17
X_80S/0805
RESVD
VCC3
L20
80S/0805
BC79 104P
EC22 10U/16VS
CLKVCC3
BC93 104P
BC102 104P
BC104 104P
BC101 104P
BC94 104P
BC103 104P
CLKVCC2
BC92 104P
BC91 104P
EC23 10U/16VS
L19
X_80S/0805
VCC2_5
CP6
X_COPPER
PCI1,PCI2,PCI3,PCI4 with 10-40PF load to drive double trace for each pin
C95
18P
Y2
14.318MHZ
C96
18P
U27
XIN
XOUT
3V66_0
3V66_1
3V66_2
PCI0
PCI1
PCI2
PCI3
PCI4
USB48M
DOT48M(3)
REF0/SEL1
APIC
CPU0
CPU1
SDRAM0
SDRAM1
SDRAM2
SDRAM3
SDRAM4
SDRAM5
SDRAM6
SDRAM7
SDRAM8
SDRAM9
SDRAM10
SDRAM11
SDRAM12
TS#/PD#
SCLK
SDATA
SEL0
W238
A+7.8" (10608)
A+7.8" (10608)
A+4.3" (7126)
A+7.5" (10263)
A+7.5" (10263)
A+9.7" (12512)
A+9.7" (12510)
A+8.2" (11010)
A+8.3" (11084)
A+8.2" (11012)
9720
9729
7563
ICHCLK66
GMCH3V66
AGP3V66
ICHPCLK
FWHPCLK
AUDIOPCLK
SIOPCLK
PCICLK1
PCICLK3
PCICLK2
ICH48M
SIO48M
DOTCLK
R202 22
R200 22
R177 33
R705 22
R706 22
R707 22
R708 22
R702 22
R703 22
R704 22
R181 22
R182 22
R180 33
FS2
D48M
FS1
R201 33
RFS1
10144
7309
568
U23D
74LVC08S
R257 33
ICH14M
BICH14M
VCC3
APICCLK
CPUHCLK
GMCHHCLK
DCLK_WR
SLP_S3#
SMBCLK
SMBDATA
R175 22
R176 22
R178 22
R179 22
R229 10K
R228 100
R208 100
RN31
RN32
8P4R-22
DIMMCLK0
DIMMCLK1
DIMMCLK2
DIMMCLK3
DIMMCLK4
DIMMCLK5
DIMMCLK6
DIMMCLK7
DCLK3
DCLK2
DCLK6
DCLK7
DCLK5
DCLK0
DCLK1
DCLK4
7919
A+5.1" (7935)
A+7" (9808)
A (2787)
A (2850)
A (2790)
A (2786)
A (2807)
A (2799)
A (2786)
A (2793)
A+3.8" (6673)
16,22
13,14,16,18,22,33
13,14,16,18,22,33
key:The GMCH power on strapping I/F on DRAM I/F, so when enter STR mode that ICH loss power ,although PD# is asserted but all clock will not be keep greater than 3ms .
refer to FM-1776 page 134
ICH14M
C1108 X_10P
EMI
CN11
CN10
X_8P4C-10P
DCLK_WR
C66 X_5P
RESVD
C102 AUDIOPCLK X_10P
C97 ICHCLK66 X_10P
C80 GMCH3V66 X_10P
C98 ICHPCLK X_10P
C99 FWHPCLK X_10P
CN12
C68 ICH48M X_10P
C36 SIO48M X_10P
C124 ICH14M X_10P
C67 D48M X_10P
C55 APICCLK X_10P
C56 CPUHCLK X_10P
C57 GMCHHCLK X_10P
C77 AGP3V66 X_10P
Setting CLK Gen. Frequency by CPU stuff R184,R156
BSEL1#
BSEL0#
R184 10K
R156 10K
R207 X_10K
FS3 FS2 FS1 FS0 CPU SDRAM
0 0 0 0 66.8 100.2
0 0 0 1 100.2 100.2
0 0 1 0 133.6 133.6
0 0 1 1 133.6 100.2
Micro-Star
Title
MS-6315
Rev
100
Document Number
Clock Synthesizer
Last Revision Date:
Tuesday, August 01, 2000
Sheet 7 of 34

82815, PART 1 : HOST INTERFACE

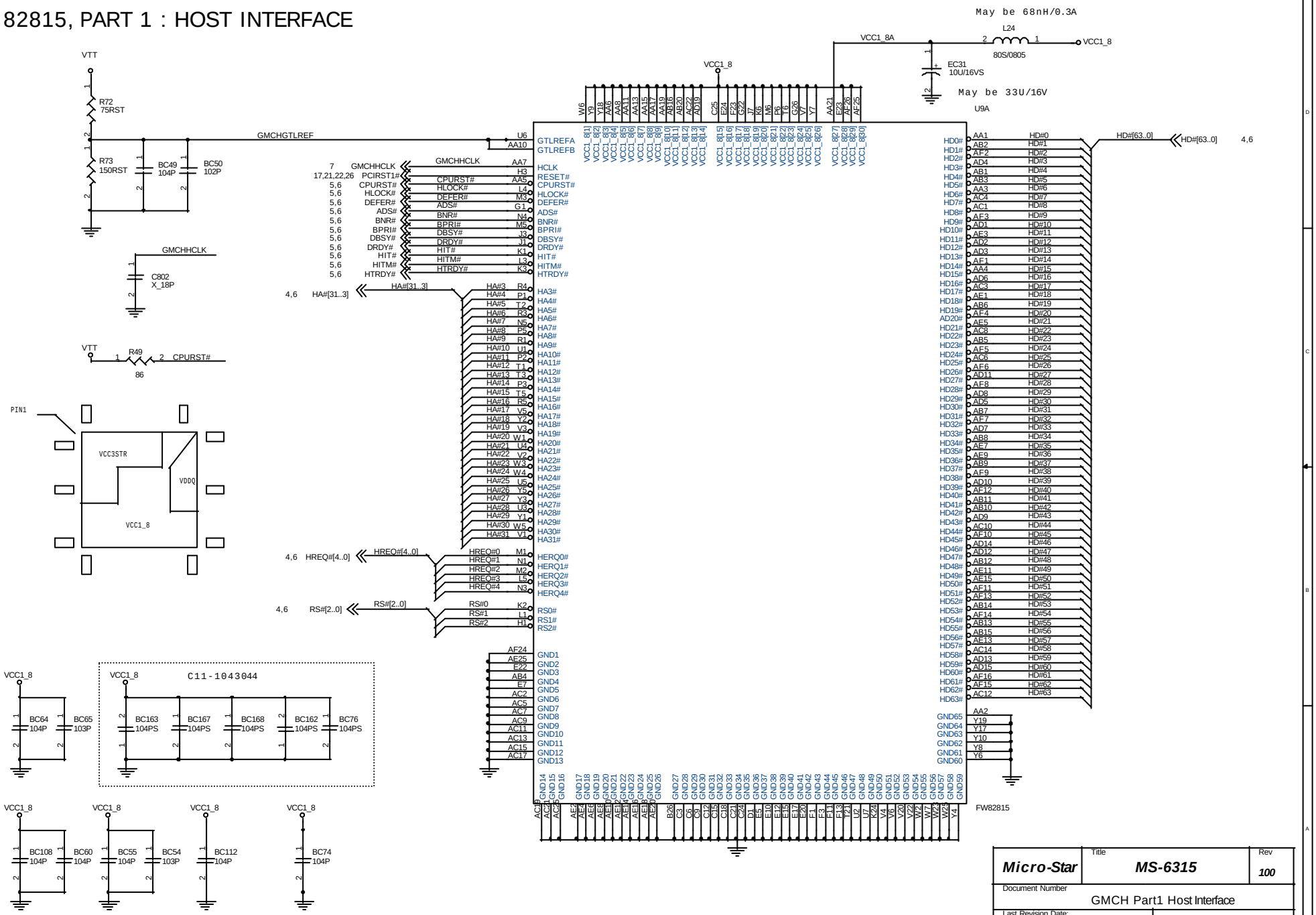

Micro-Star	Title: MS-6315		Rev: 100
Document Number: GMCH Part1 Host Interface			
Last Revision Date: Tuesday, August 01, 2000		Sheet 8 of 34	

GMCH, PART 2 : SYSTEM MEMORY

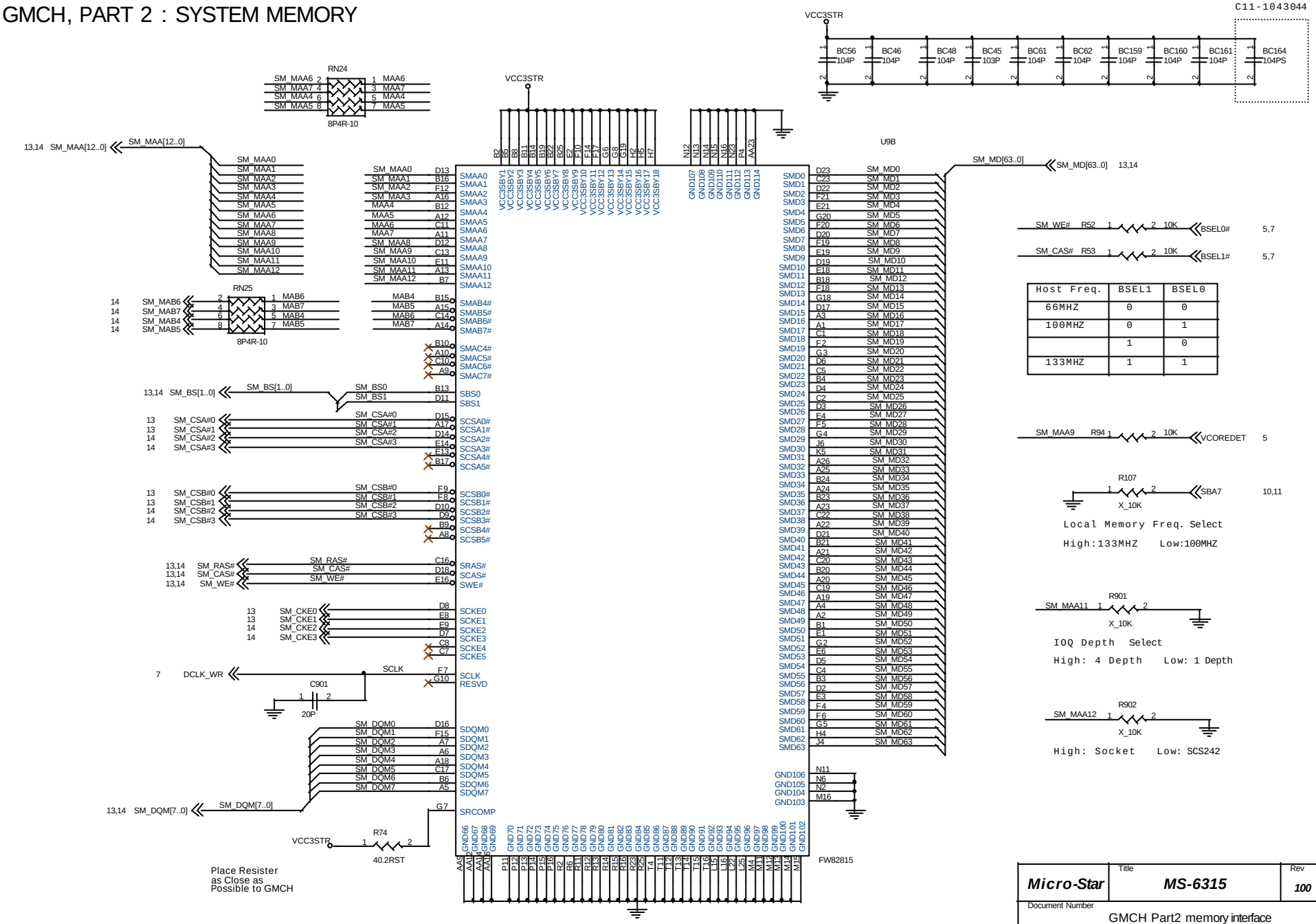

GMCH PART 3 : AGP & VIDEO Interface & HUB link

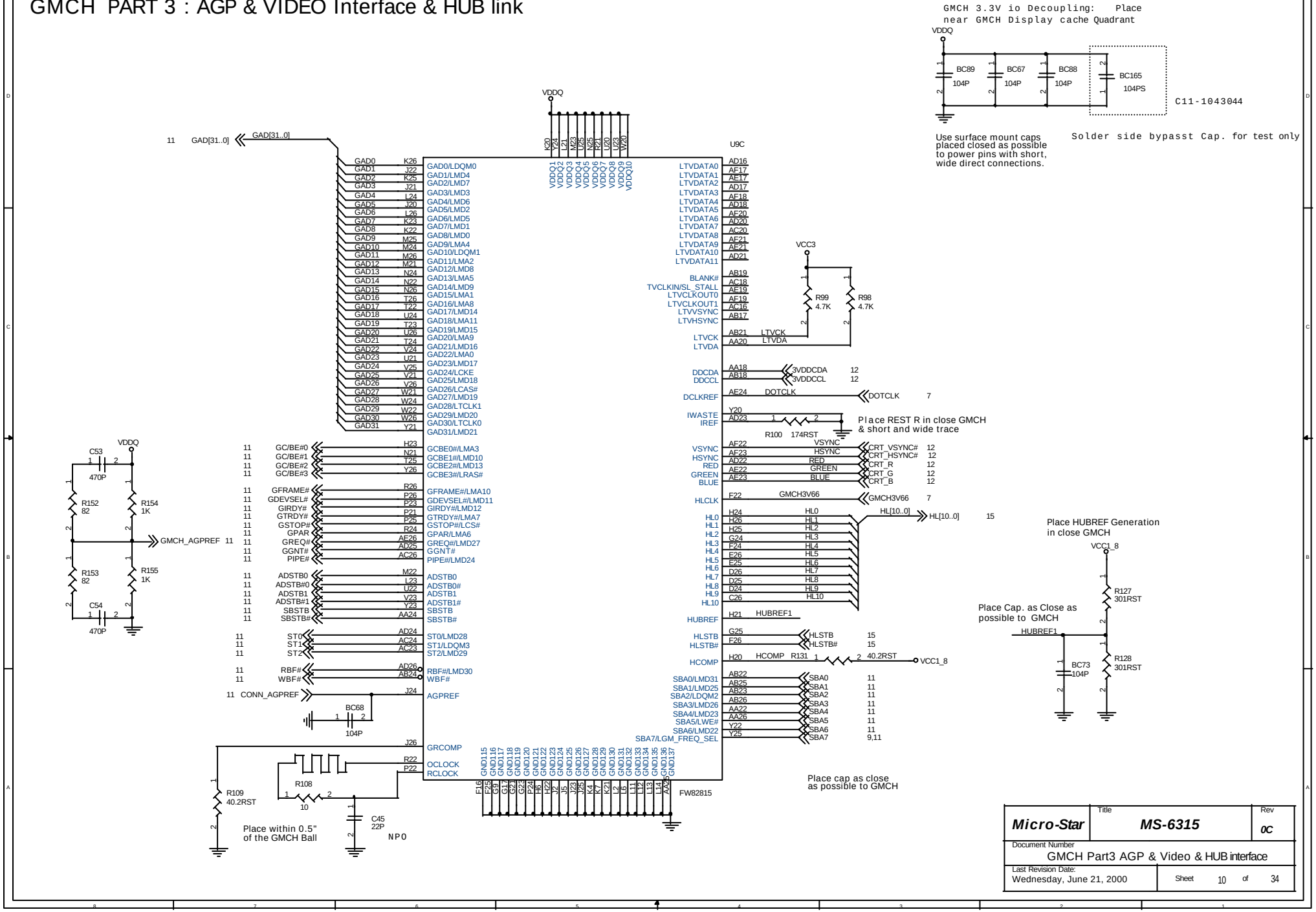

Micro-Star	Title: MS-6315	Rev: 0C
Document Number: GMCH Part3 AGP & Video & HUB interface		
Last Revision Date: Wednesday, June 21, 2000	Sheet 10 of 34	

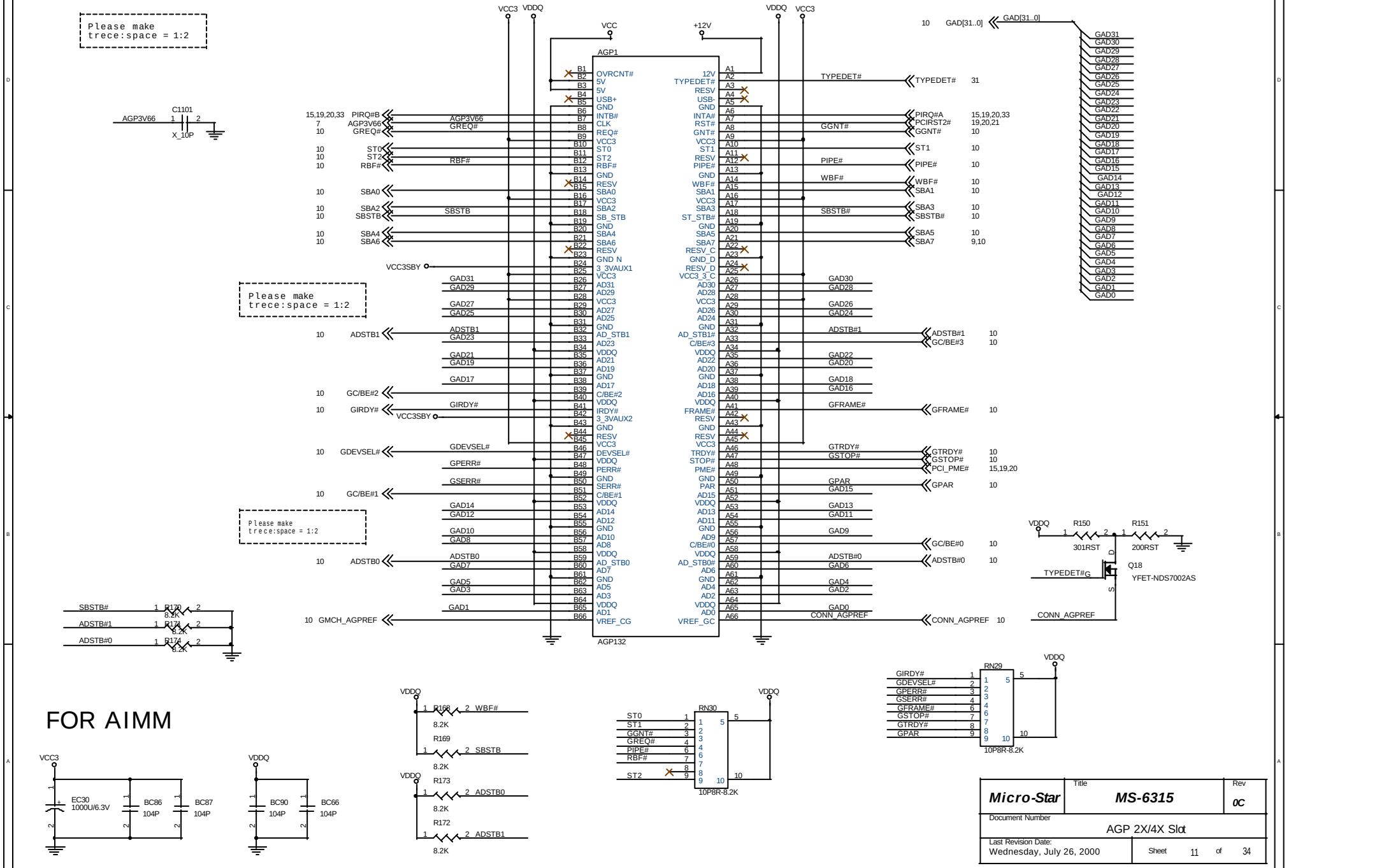

Micro-Star	Title: MS-6315	Rev: 0C
	Document Number: AGP 2X/4X Slot	
	Last Revision Date: Wednesday, July 26, 2000	Sheet 11 of 34

Video Connector

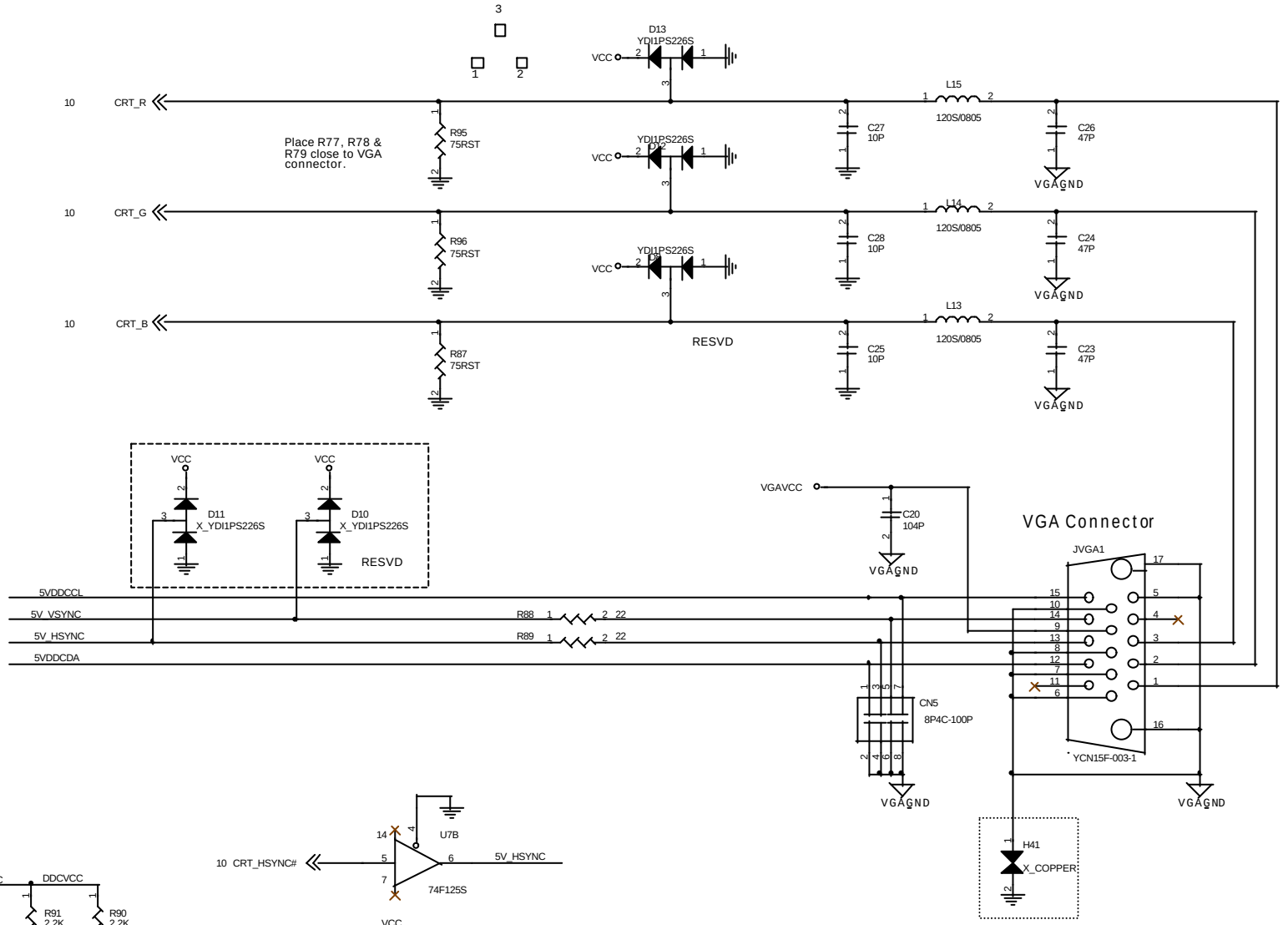

5V to 3.3V Translation/Isolation

Micro-Star	Title: MS-6315		Rev: 0C
	Document Number: Video Connector		
	Last Revision Date: Thursday, June 22, 2000	Sheet 12 of 34	

DIMM1

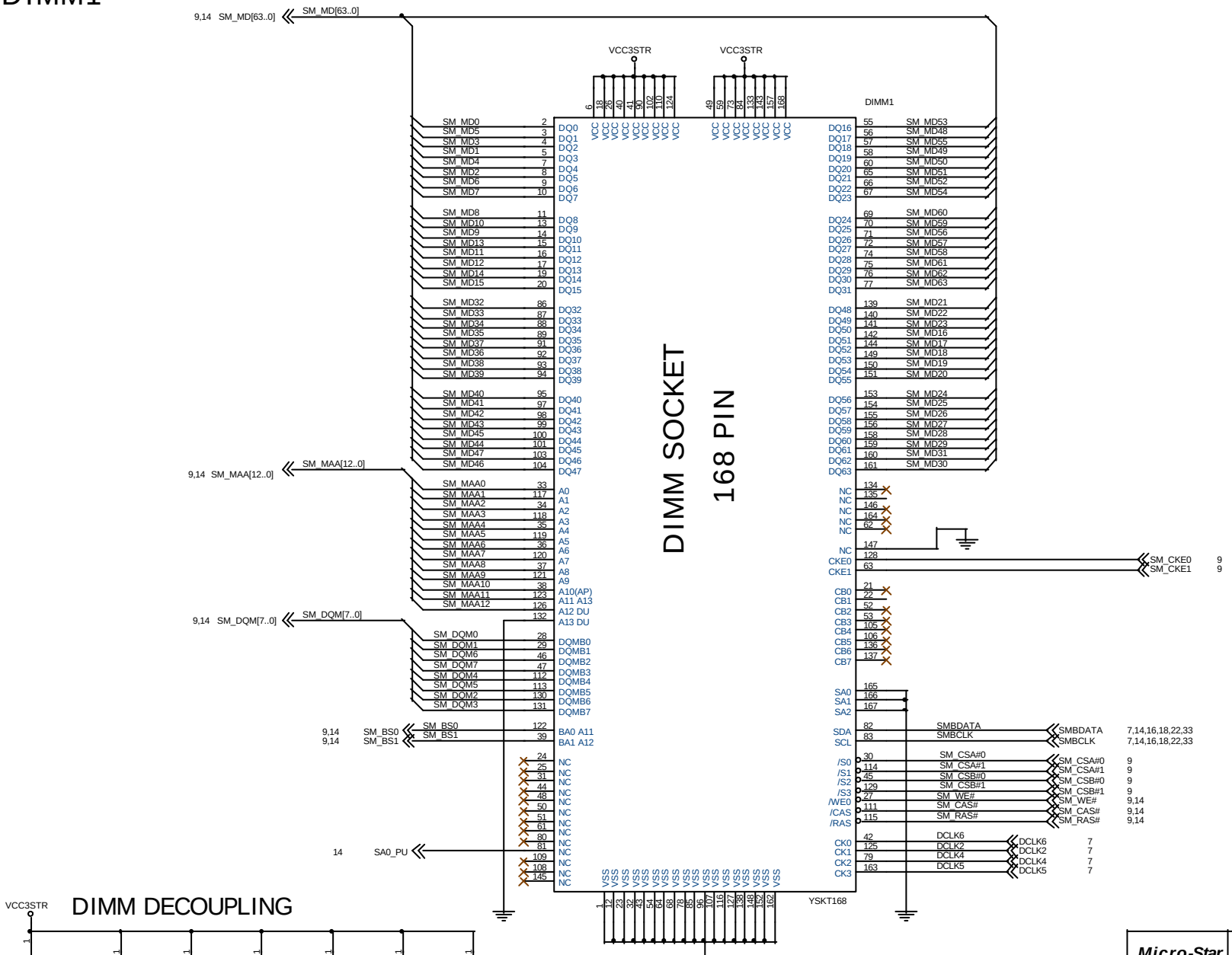

DIMM DECOUPLING

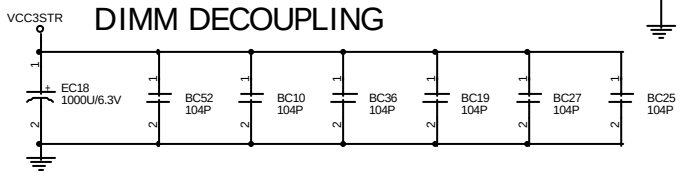

Micro-Star	Title: MS-6315	Rev: 0C
Document Number: System Memory: DIMM1		
Last Revision Date: Wednesday, June 21, 2000	Sheet 13 of 34	

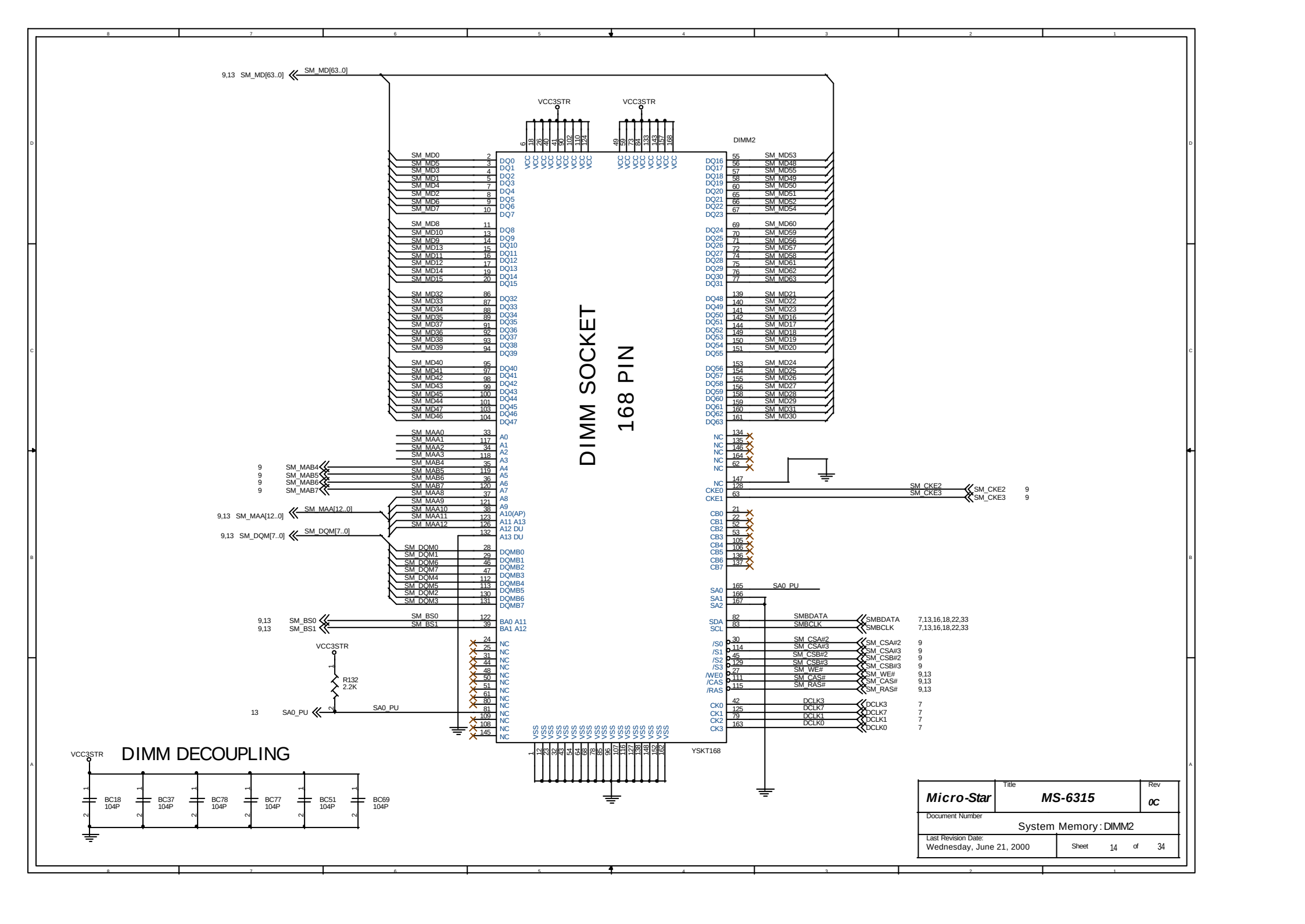
DIMM SOCKET
168 PIN
DIMM2
YSKT168
VCC3STR
SM_MD[63..0]
SM_MAA[12..0]
SM_DQM[7..0]
SM_MAB4
SM_MAB5
SM_MAB6
SM_MAB7
SM_BS0
SM_BS1
SA0_PU
R132
2.2K
SMBDATA
SMBCLK
SM_CKE2
SM_CKE3
SM_CSA#2
SM_CSA#3
SM_CSB#2
SM_CSB#3
SM_WE#
SM_CAS#
SM_RAS#
DCLK3
DCLK7
DCLK1
DCLK0
DIMM DECOUPLING
BC18 104P
BC37 104P
BC78 104P
BC77 104P
BC51 104P
BC69 104P
Micro-Star
MS-6315
0C
System Memory: DIMM2
Wednesday, June 21, 2000
Sheet 14 of 34

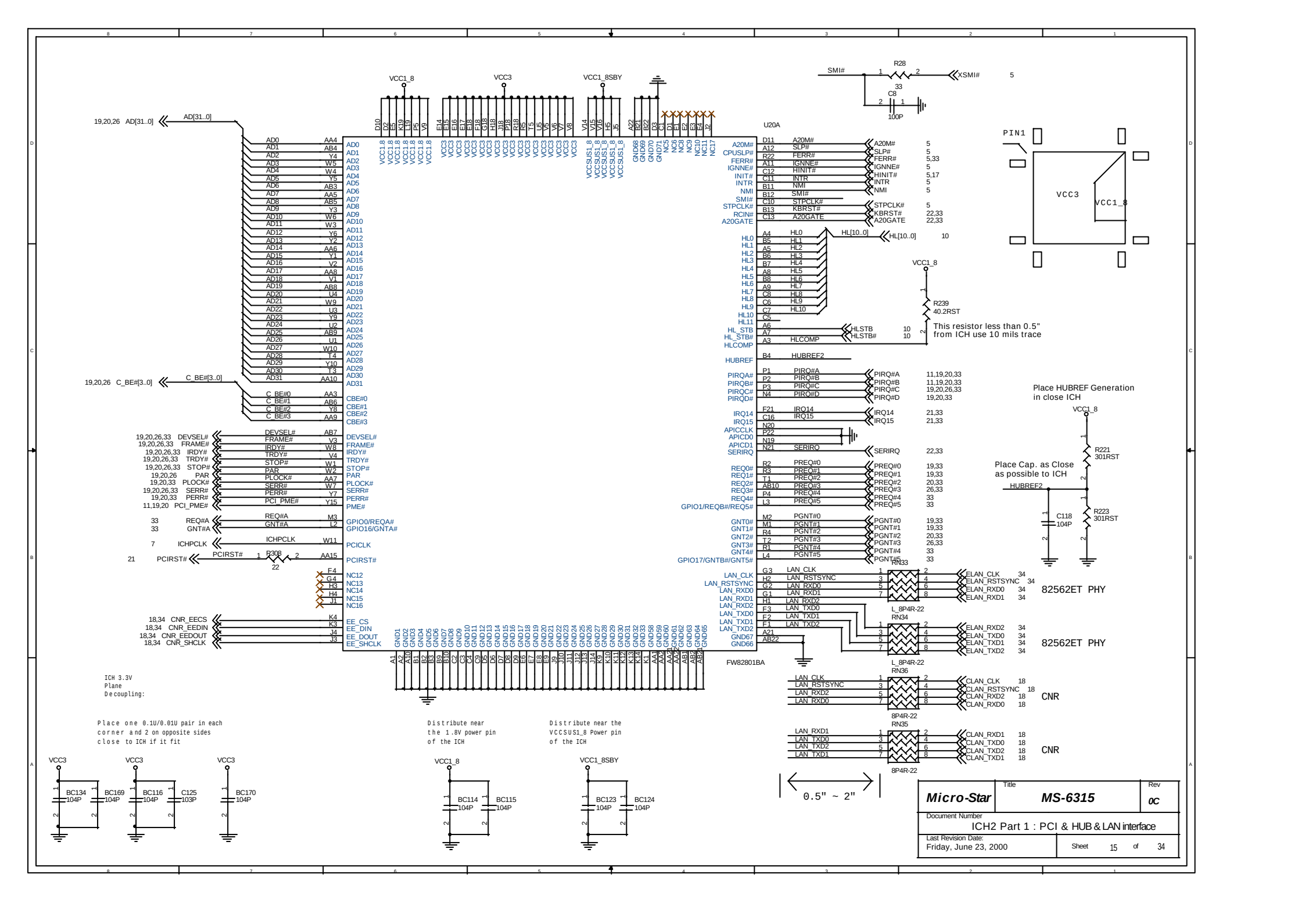
VCC1_8
VCC3
VCC1_8SBY
SMI#
R28
33
XSMI#
C8
100P
PIN1
U20A
FW82801BA
AD[31..0]
C_BE#[3..0]
HL[10..0]
R239
40.2RST
This resistor less than 0.5" from ICH use 10 mils trace
Place HUBREF Generation in close ICH
Place Cap. as Close as possible to ICH
R221
301RST
R223
301RST
C118
104P
HUBREF2
82562ET PHY
82562ET PHY
CNR
CNR
RN33
RN34
RN35
RN36
L_8P4R-22
8P4R-22
ICH 3.3V Plane Decoupling:
Place one 0.1U/0.01U pair in each corner and 2 on opposite sides close to ICH if it fit
Distribute near the 1.8V power pin of the ICH
Distribute near the VCCSUS1_8 Power pin of the ICH
BC134 104P
BC169 104P
BC116 104P
C125 103P
BC170 104P
BC114 104P
BC115 104P
BC123 104P
BC124 104P
0.5" ~ 2"
Micro-Star
MS-6315
0C
ICH2 Part 1 : PCI & HUB & LAN interface
Friday, June 23, 2000
Sheet 15 of 34

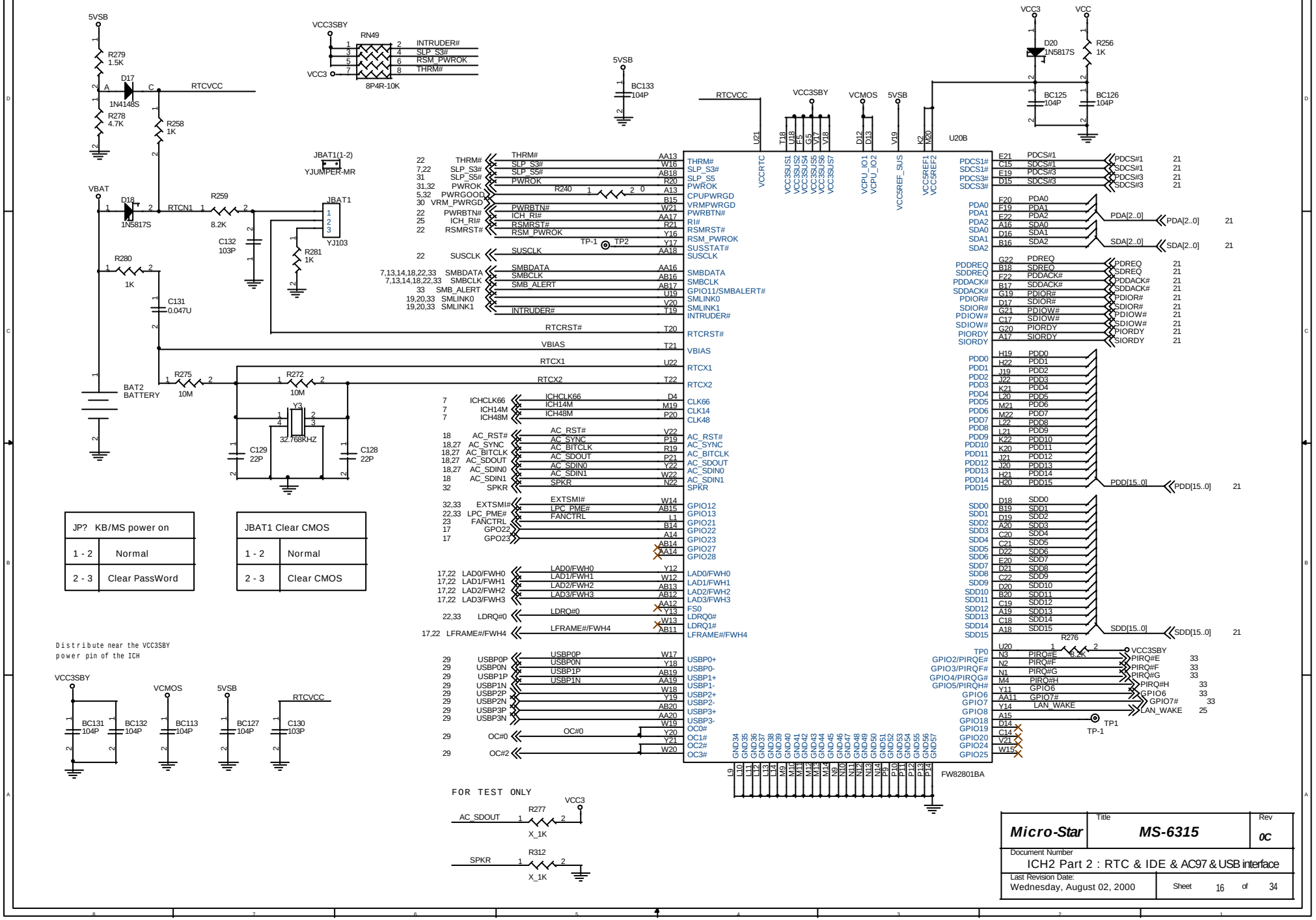

Micro-Star	Title: MS-6315
	Rev: 0C
Document Number	ICH2 Part 2 : RTC & IDE & AC97 & USB interface
Last Revision Date: Wednesday, August 02, 2000	Sheet 16 of 34

Firware Hub (FWH)

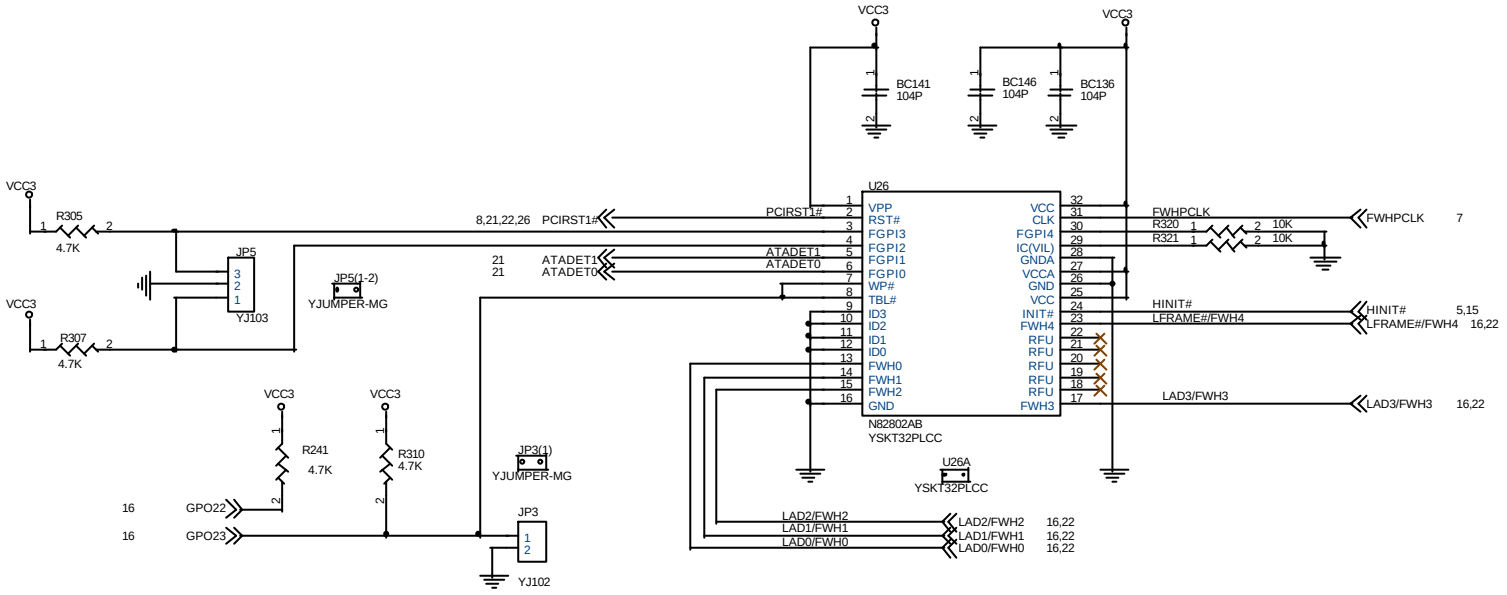

JP5 BIOS Update Configuration	
1 - 2	Normal Mode
2 - 3	Boot auto clear CMOS
OPEN	Flash from FDD

*

JP3 BIOS Update	
SHORT	Locked
OPEN	Unlocked

Micro-Star	Title: MS-6315	Rev: 0C
Document Number: Firware HUB (FWH)		
Last Revision Date: Wednesday, June 21, 2000	Sheet 17 of 34	

CNR RISER

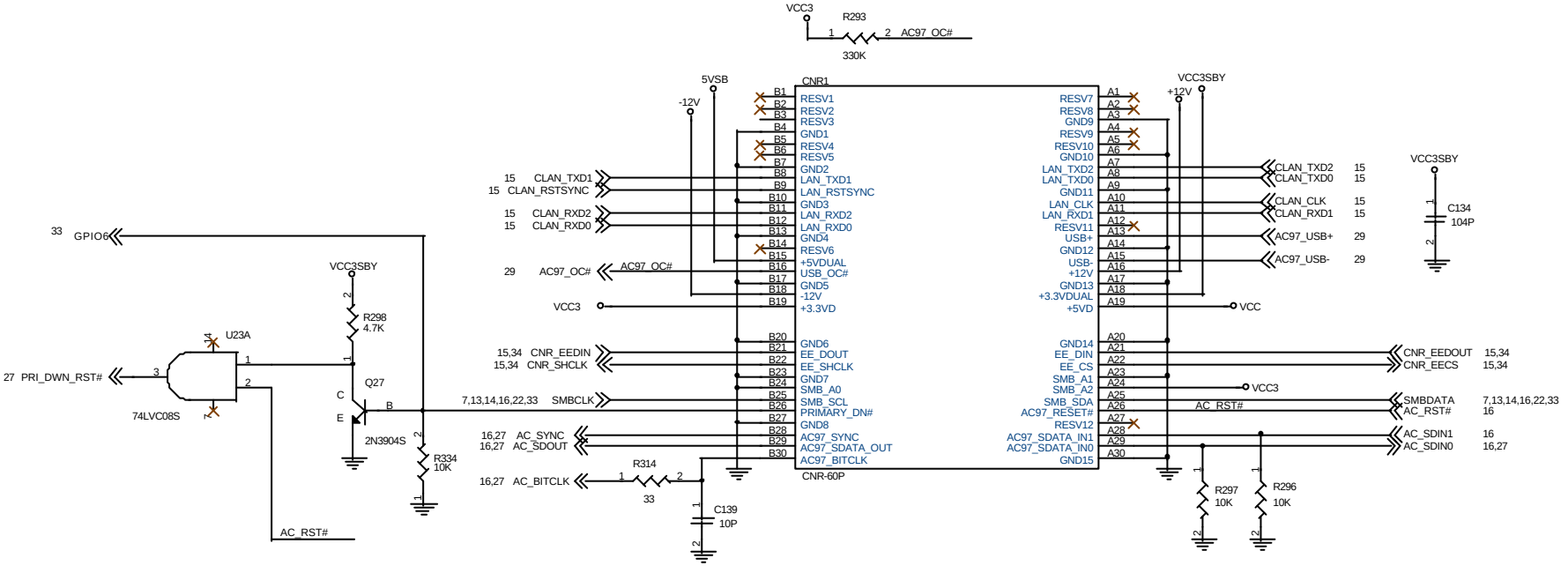

JP4	AUDIO DOWN
1 - 2	Enable onboard audio codec
2 - 3	Disable onboard audio codec

Micro-Star	Title: MS-6315	Rev: 0C
Document Number: CNR Slot		
Last Revision Date: Tuesday, August 01, 2000	Sheet 18 of 34	

PCI Connectors

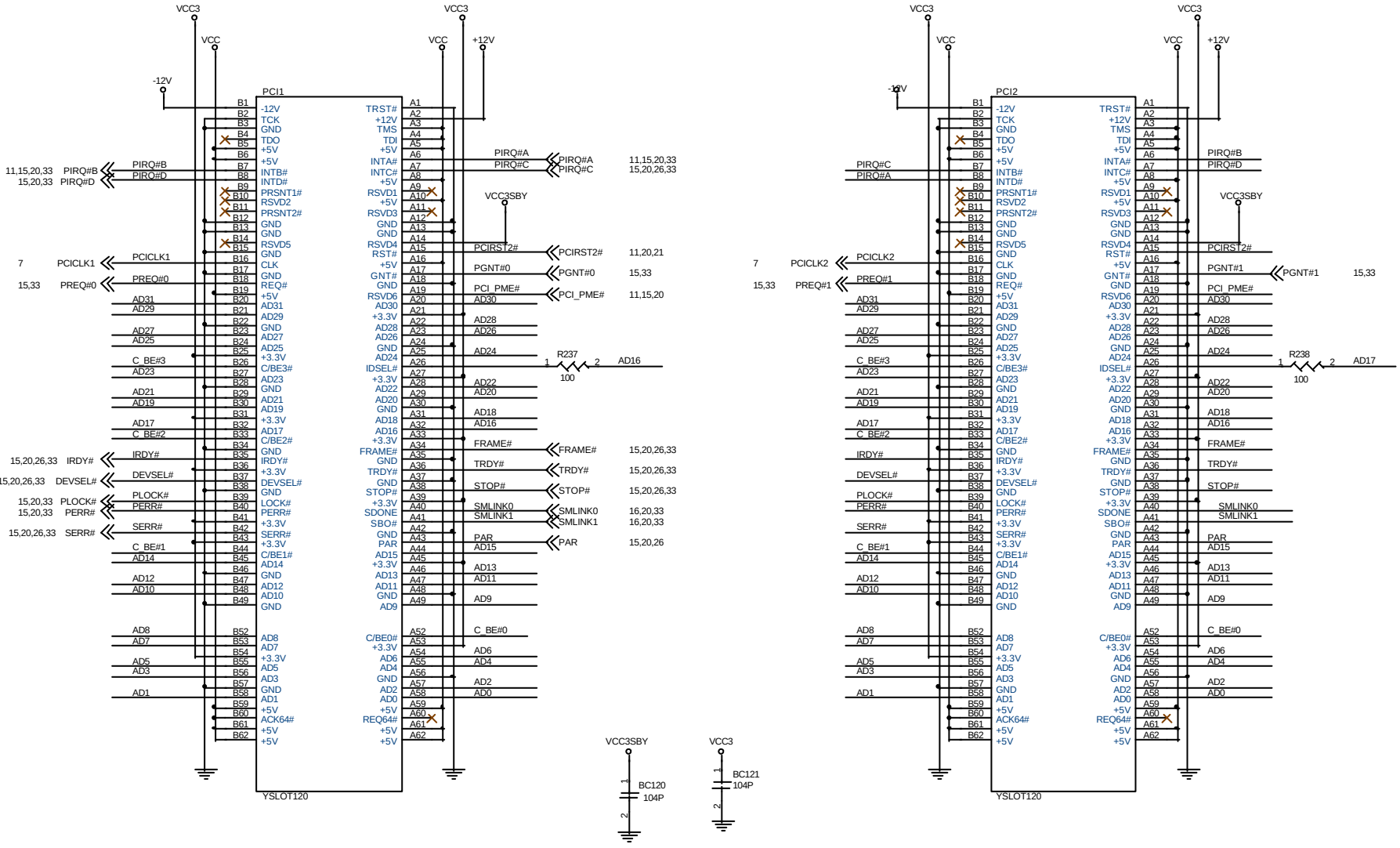

15,20,26 AD[31..0] ← AD[31..0]

15,20,26 C_BE#[3..0] ← C_BE#[3..0]

Micro-Star	Title: MS-6315	Rev: 0C
Document Number: PCI Slot 1 & 2		
Last Revision Date: Friday, June 23, 2000	Sheet 19 of 34	

PCI Slot

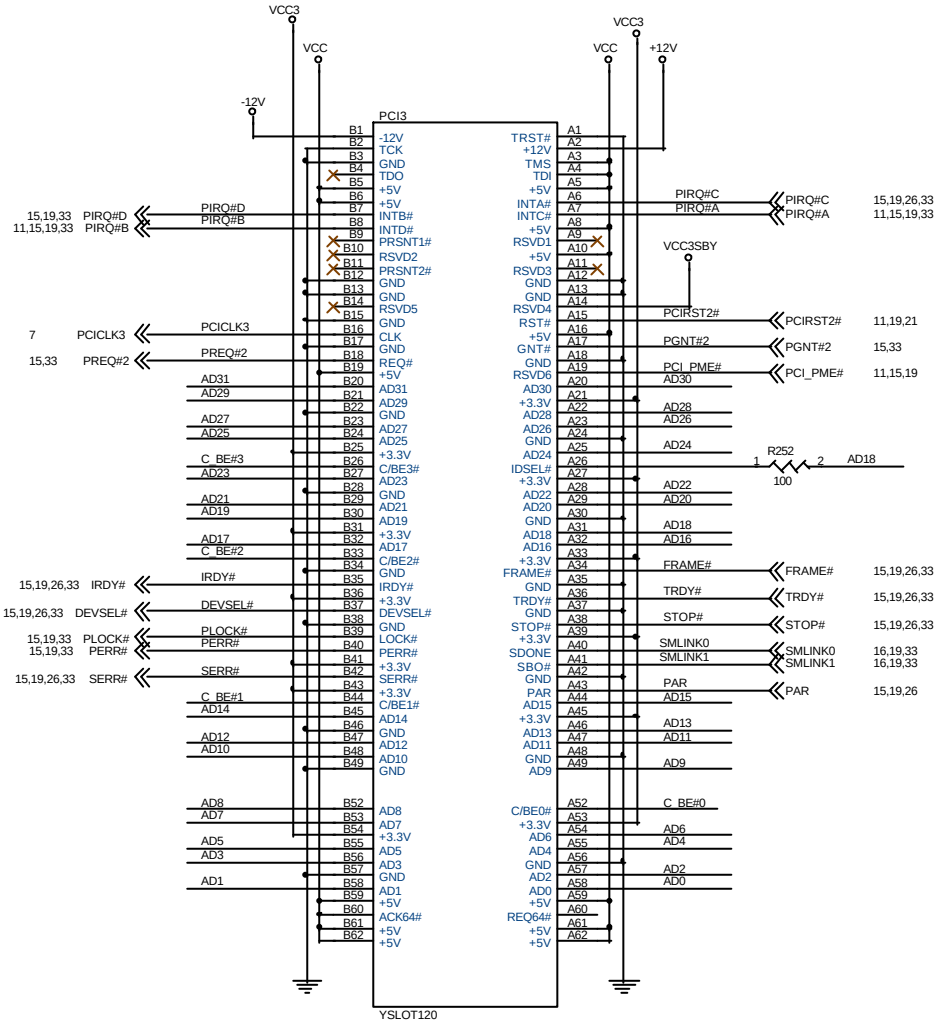

15,19,26 AD[31..0] AD[31..0]

15,19,26 C_BE#[3..0] C_BE#[3..0]

Micro-Star	Title: MS-6315	Rev: 0C
Document Number: PCI Slot 3		
Last Revision Date: Wednesday, June 21, 2000	Sheet 20 of 34	

ATA66 IDE CONNECTORS

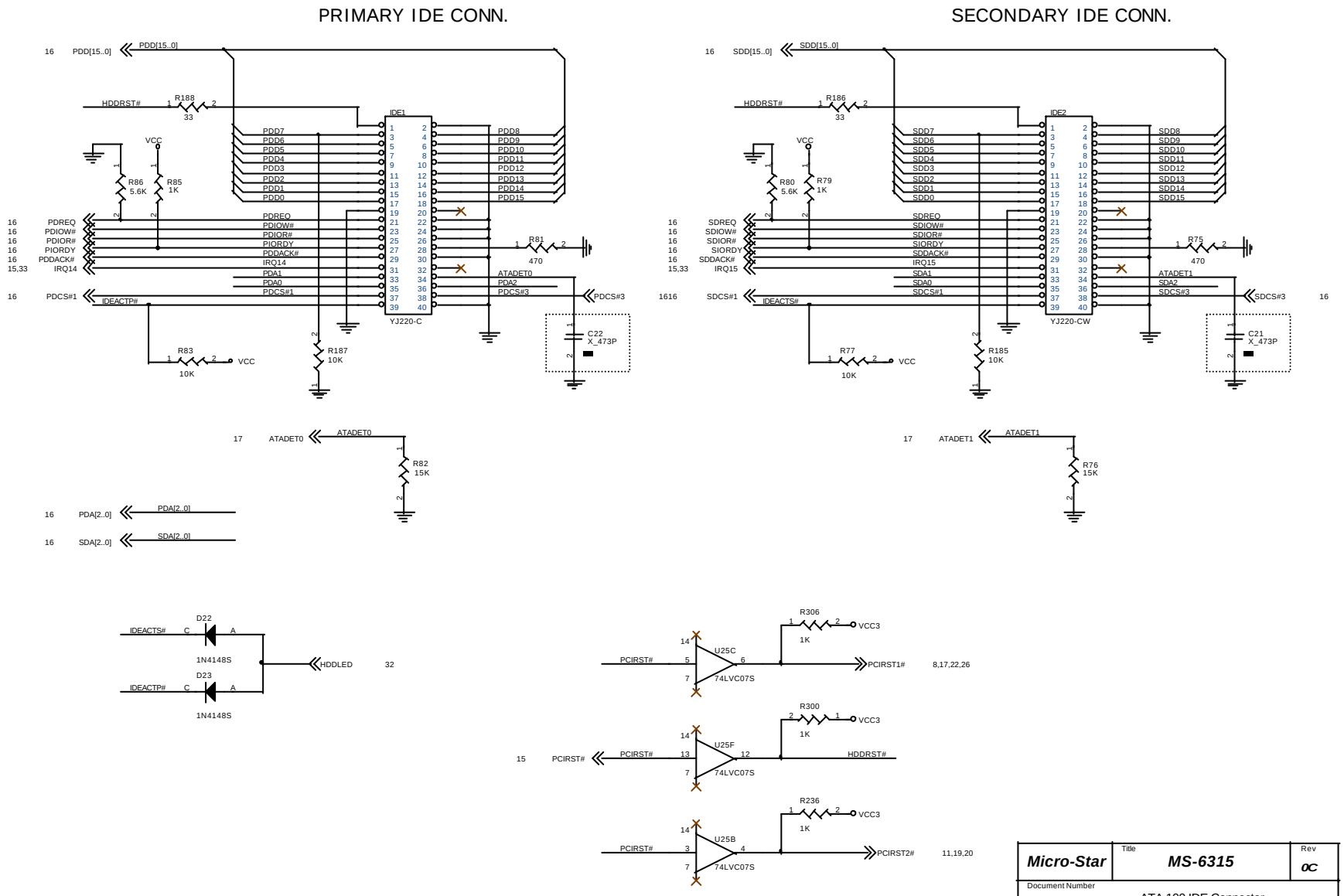

Micro-Star	Title: MS-6315		Rev: 0C
Document Number: ATA 100 IDE Connector			
Last Revision Date: Friday, July 21,2000		Sheet 21 of 34	

Super I/O

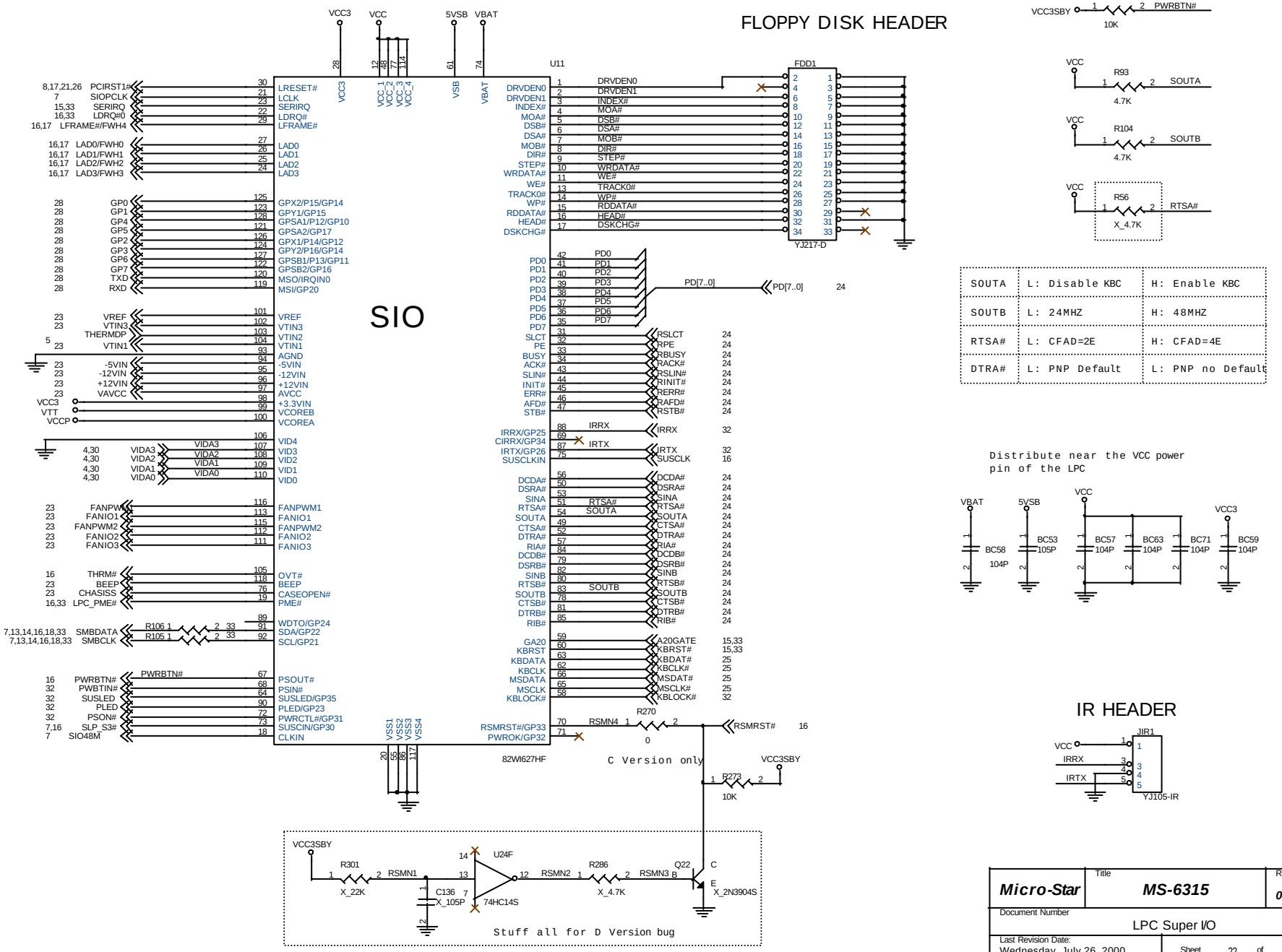

Micro-Star	Title: MS-6315	Rev: 0C
	Document Number: LPC Super I/O	
Last Revision Date: Wednesday, July 26, 2000	Sheet 22 of 34	

Hardware Monitor

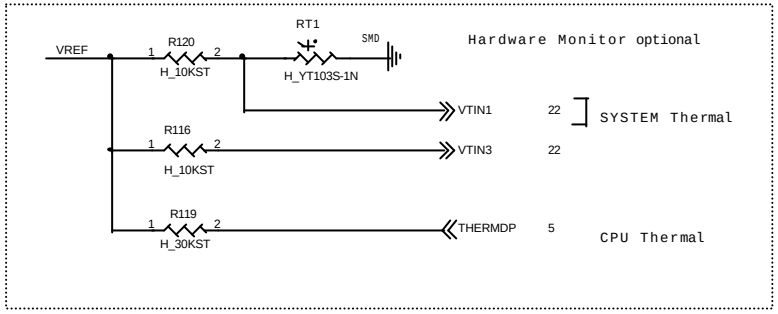

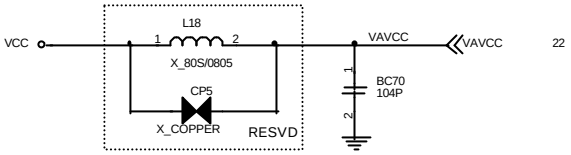

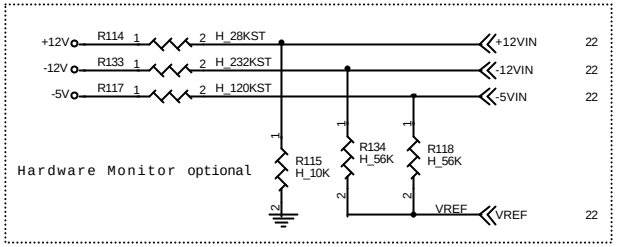

Chasiss Intrusion Header

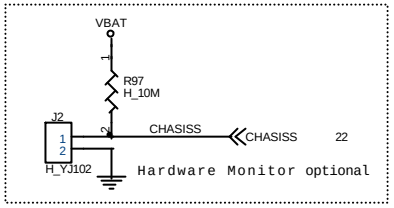

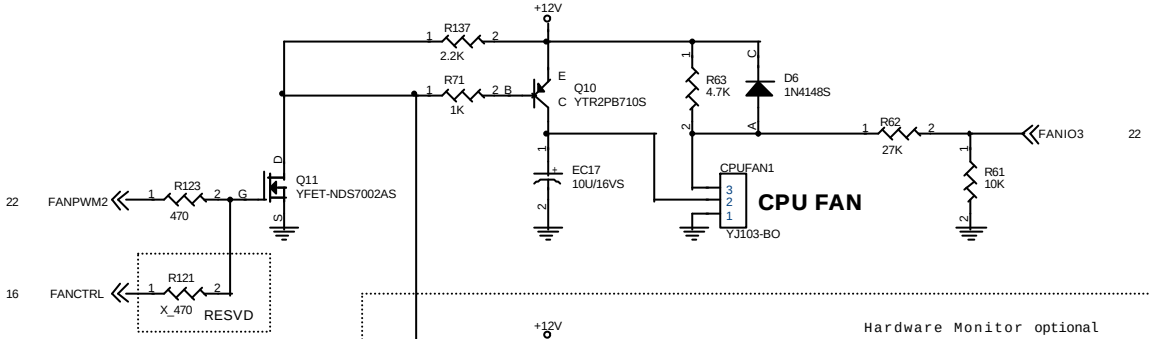

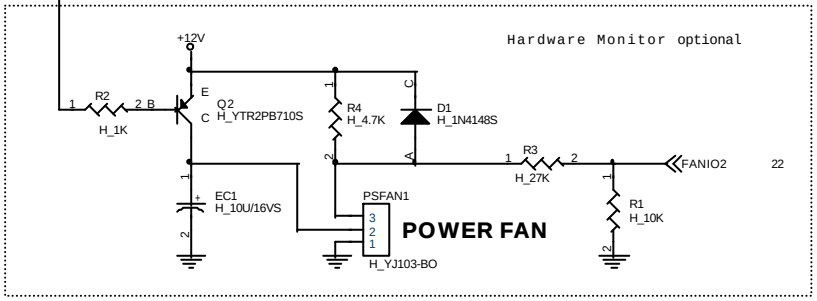

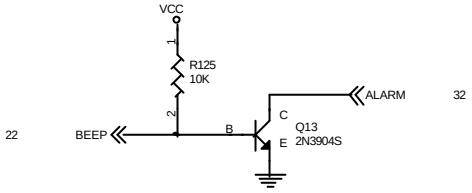

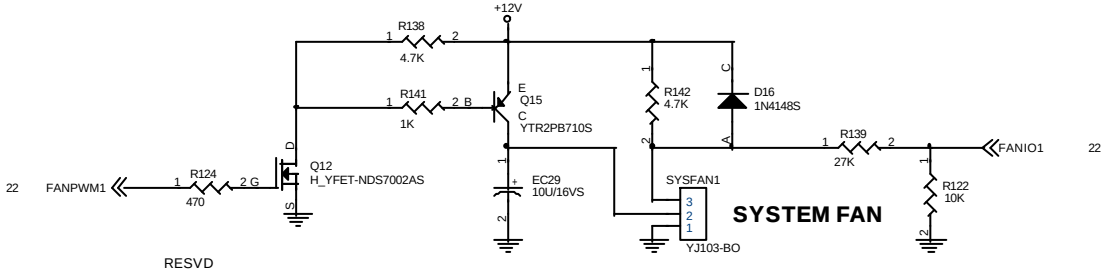

Micro-Star	Title: MS-6315	Rev: 0C
Document Number: Hardware Monitor		
Last Revision Date: Friday, July 21, 2000	Sheet 23 of 34	

Parallel Port / COM1port & COM2 Header

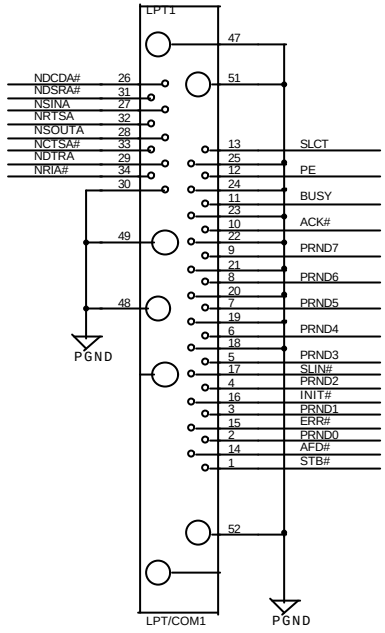

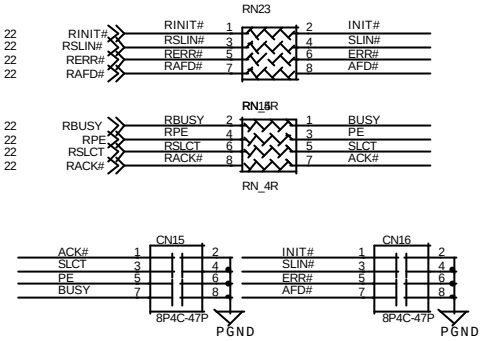

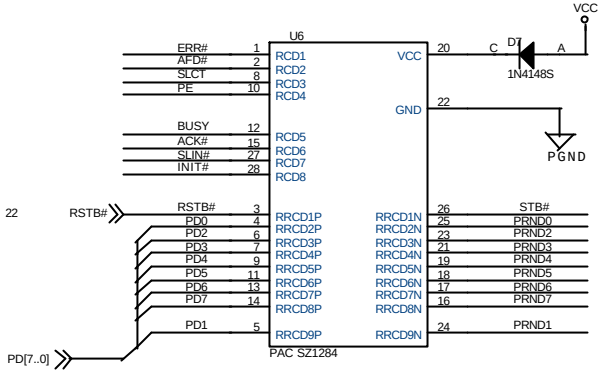

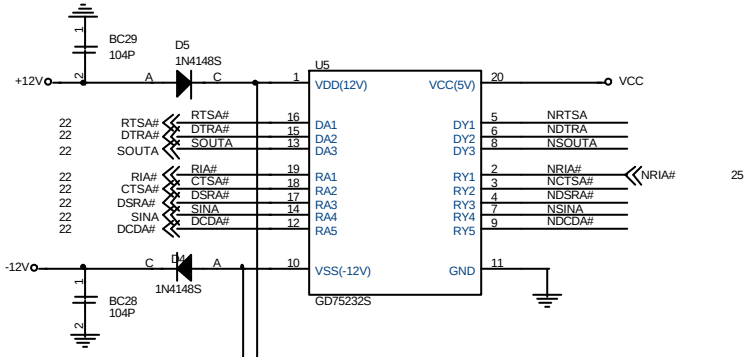

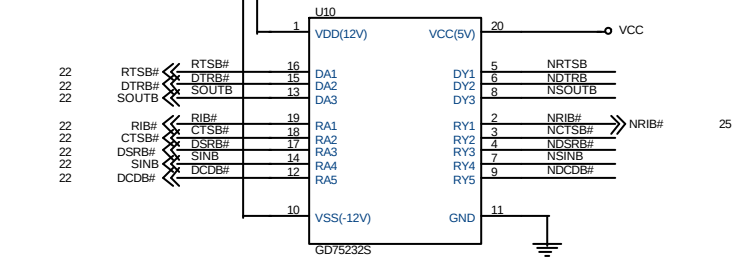

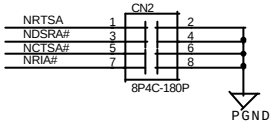

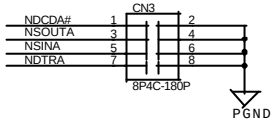

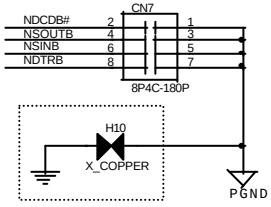

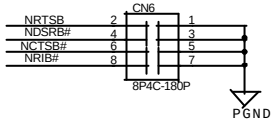

COM2 HEADER

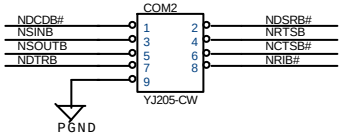

Micro-Star	Title: MS-6315	Rev: 0C
Document Number: Parallel Port Header		
Last Revision Date: Friday, September 01, 2000	Sheet 24 of 34	

KEYBOARD/MOUSE PORTS

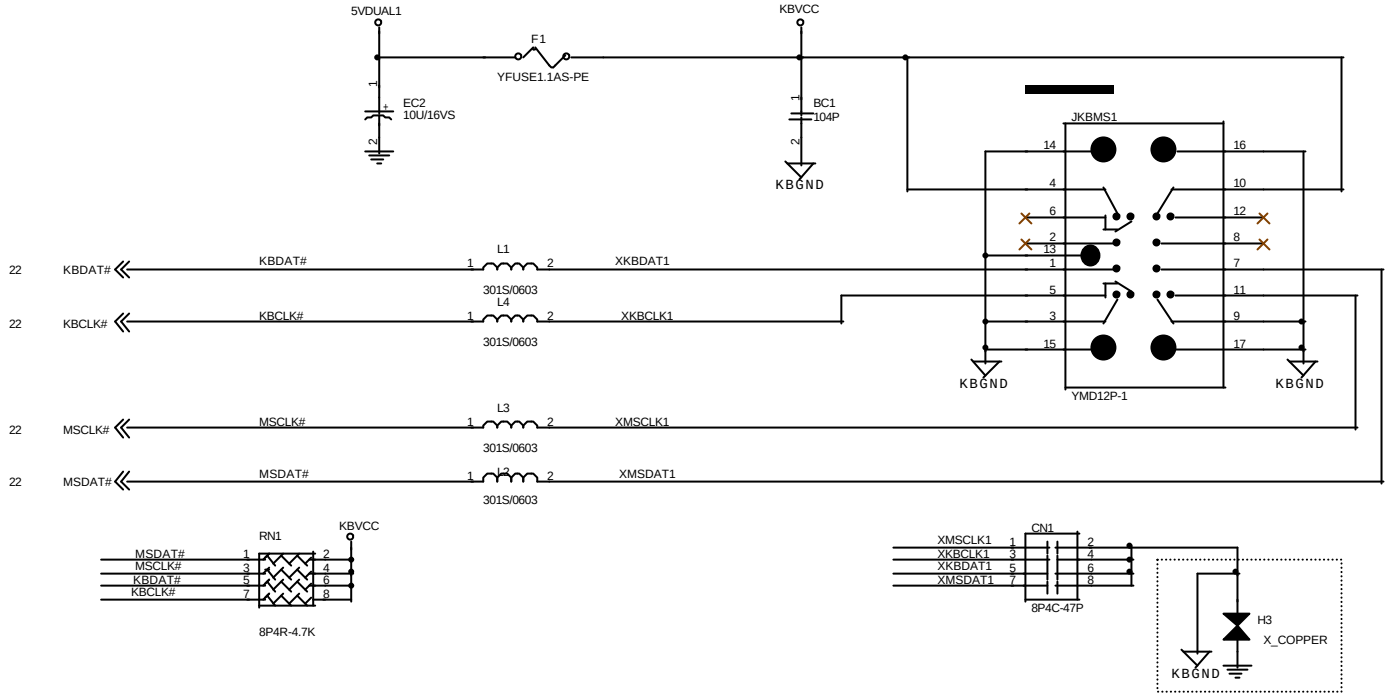

LAN WAKEUP HEADER

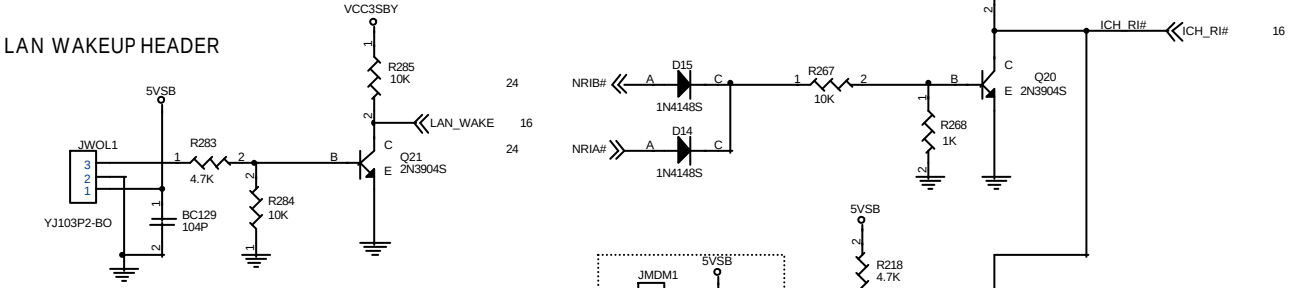

INTERNAL MODEM WAKEUP HEADER

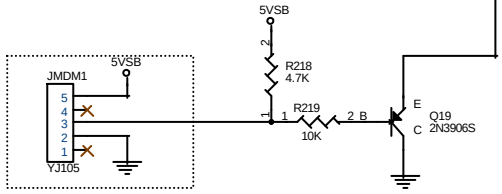

Micro-Star	Title: MS6315	Rev: 0C
	Document Number: Keyboard board / Mouse port	
Last Revision Date: Thursday, June 29, 2000	Sheet 25 of 34	

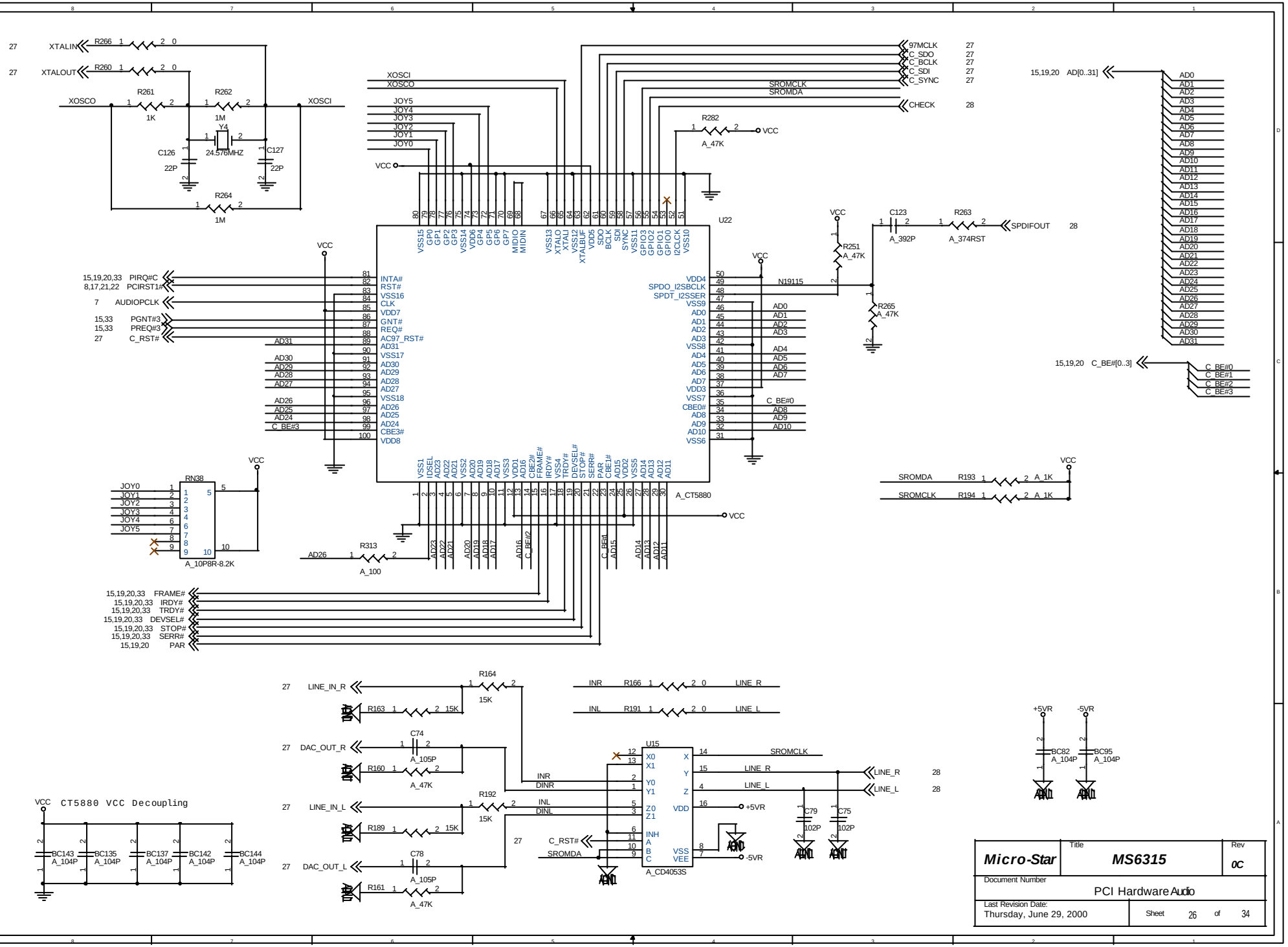

Micro-Star	Title: MS6315	Rev: 0C
Document Number: PCI Hardware Audio		
Last Revision Date: Thursday, June 29, 2000	Sheet 26 of 34	

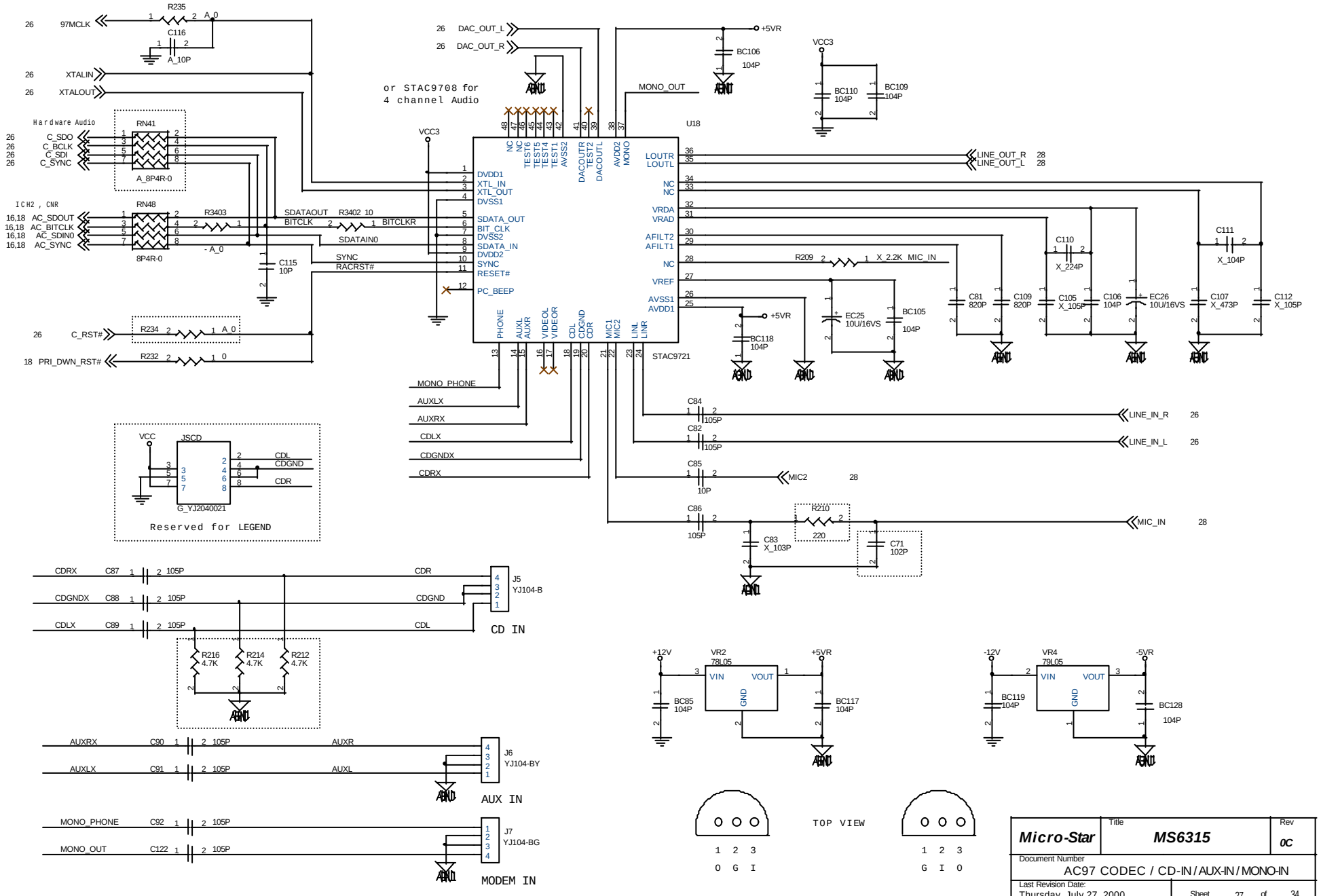
or STAC9708 for
4 channel Audio
Hardware Audio
ICH2 , CNR
Reserved for LEGEND
CD IN
AUX IN
MODEM IN
TOP VIEW
STAC9721
U18
Micro-Star
MS6315
0C
AC97 CODEC / CD-IN / AUX-IN / MONO-IN
Thursday, July 27, 2000
Sheet 27 of 34

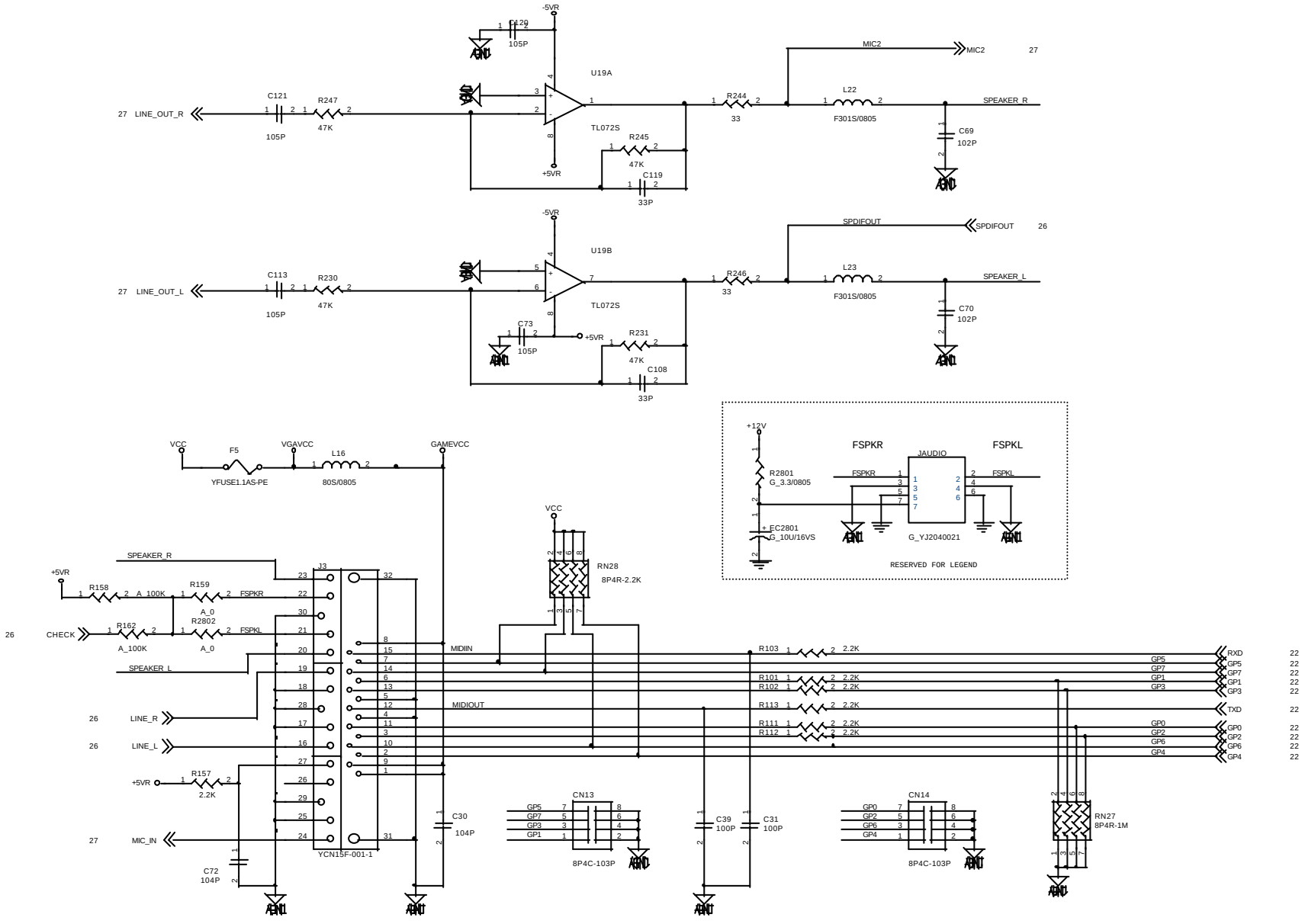

GAME PORT HEADER

Micro-Star	Title: MS6315	Rev: 0C
Document Number: Audio Amplifier & Game port Connector		
Last Revision Date: Wednesday, July 26,2000	Sheet 28 of 34	

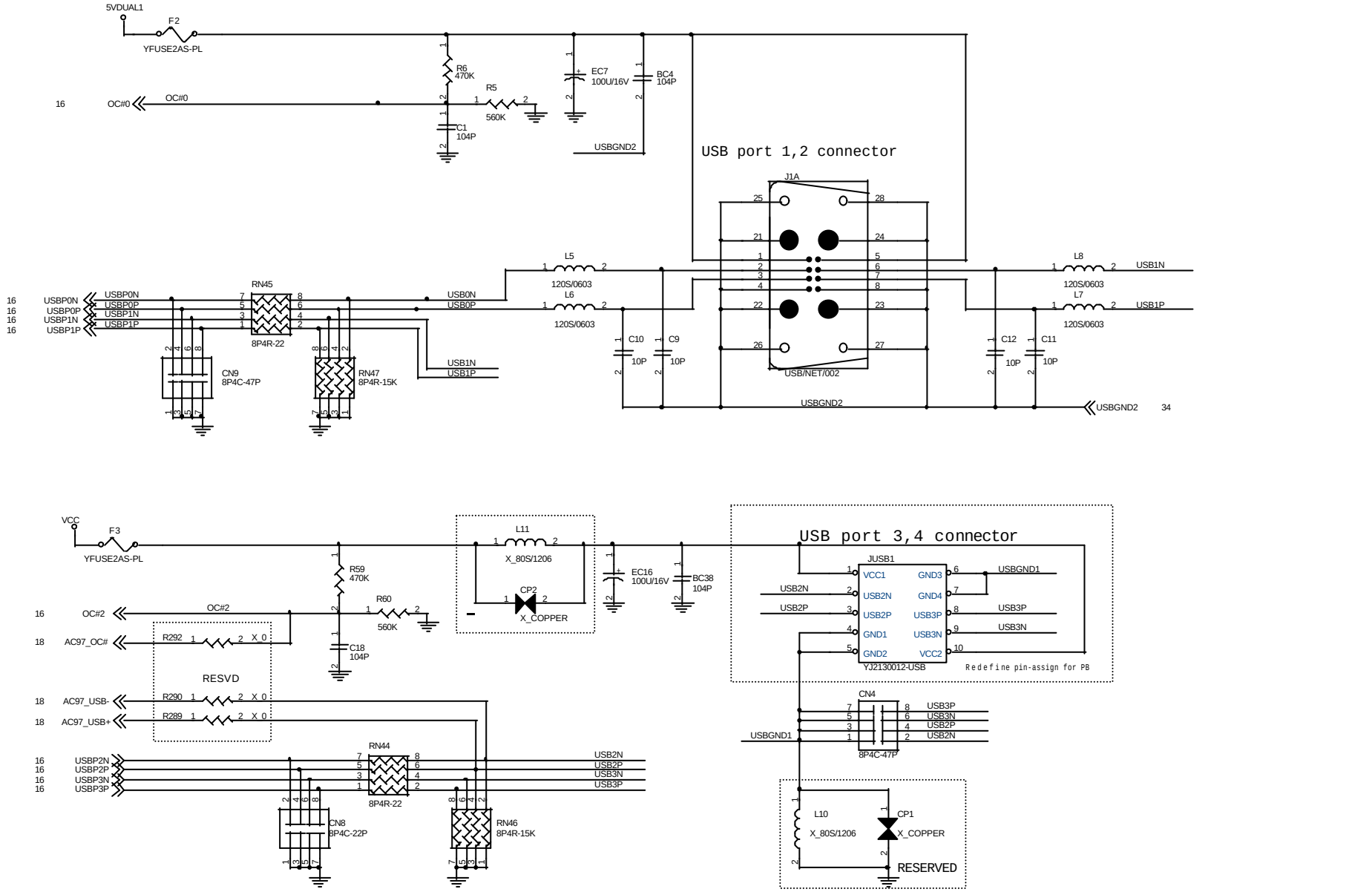

Micro-Star	Title: MS6315	Rev: 0C
Document Number: USB Connector		
Last Revision Date: Thursday, June 29, 2000	Sheet 29 of 34	

VRM 8.4

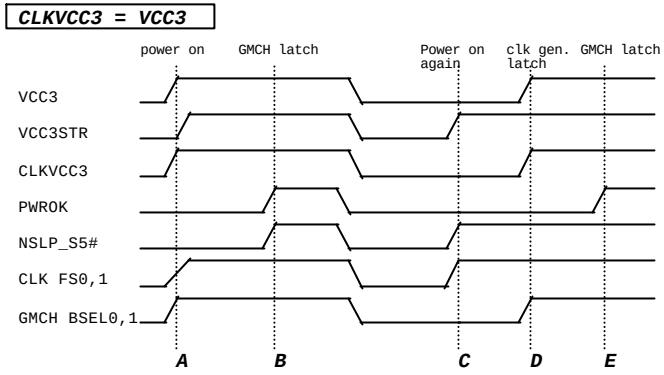

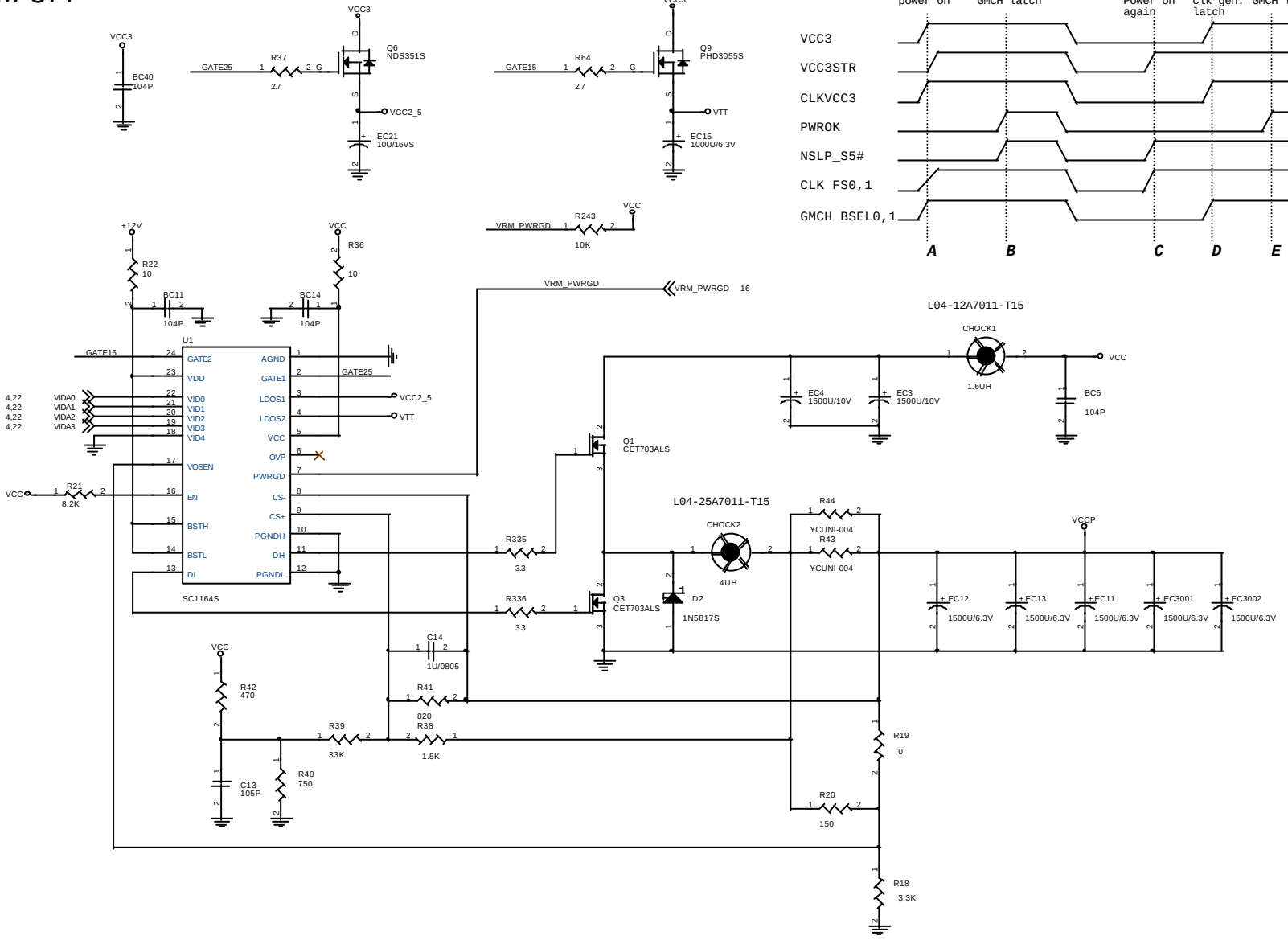

Micro-Star	Title: MS6315	Rev: 0C
Document Number: VRM 8.4 (SC1164) / VCCP , VCC2_5 , VTT		
Last Revision Date: Friday, November 24,2000	Sheet 30 of 34	

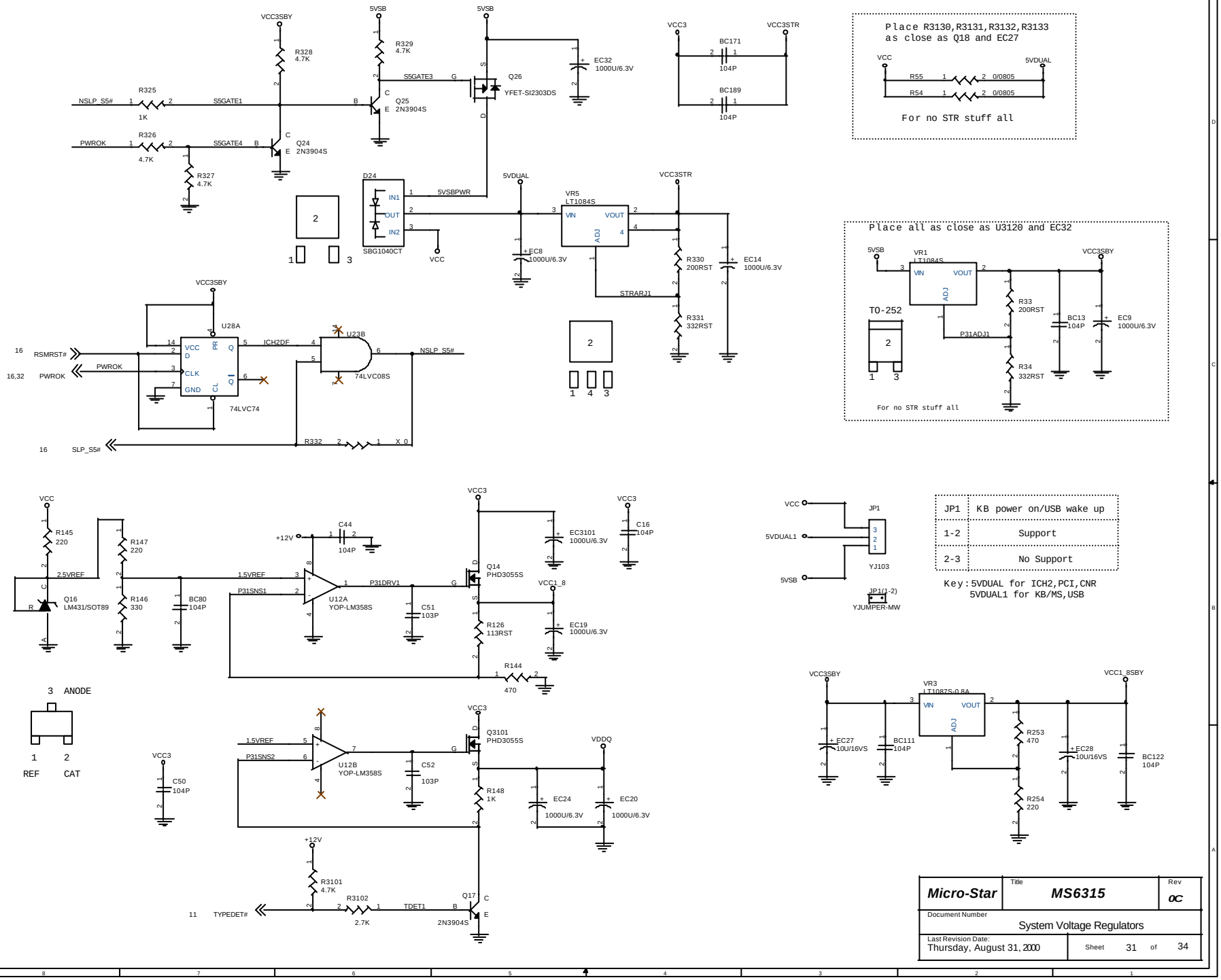
VCC3SBY
5VSB
R328 4.7K
R329 4.7K
R325 1K
R326 4.7K
R327 4.7K
NSLP_S5#
PWROK
S5GATE1
S5GATE3
S5GATE4
Q25 E 2N3904S
Q24 E 2N3904S
Q26 YFET-SI2303DS
EC32 1000U/6.3V
VCC3
VCC3STR
BC171 104P
BC189 104P
Place R3130,R3131,R3132,R3133 as close as Q18 and EC27
VCC
5VDUAL
R55 0/0805
R54 0/0805
For no STR stuff all
D24
SBG1040CT
IN1
IN2
OUT
5VSBPWR
5VDUAL
VR5 LT1084S
VIN
VOUT
ADJ
EC8 1000U/6.3V
R330 200RST
R331 332RST
EC14 1000U/6.3V
STRARJ1
VCC3STR
U28A
U23B
74LVC74
74LVC08S
RSMRST#
PWROK
ICH2DF
NSLP_S5#
SLP_S5#
R332
Place all as close as U3120 and EC32
VR1 LT1084S
TO-252
P31ADJ1
R33 200RST
R34 332RST
BC13 104P
EC9 1000U/6.3V
For no STR stuff all
VCC
R145 220
R147 220
R146 330
Q16 LM431/SOT89
2.5VREF
BC80 104P
C44 104P
+12V
1.5VREF
P31SNS1
U12A YOP-LM358S
C51 103P
P31DRV1
Q14 PHD3055S
EC3101 1000U/6.3V
C16 104P
VCC1_8
R126 113RST
EC19 1000U/6.3V
R144 470
3 ANODE
1 REF
2 CAT
C50 104P
P31SNS2
U12B YOP-LM358S
C52 103P
Q3101 PHD3055S
VDDQ
R148 1K
EC24 1000U/6.3V
EC20 1000U/6.3V
R3101 4.7K
R3102 2.7K
TYPEDET#
TDET1
Q17 2N3904S
5VDUAL1
JP1
YJ103
JP1(1-2)
YJUMPER-MW
JP1 | KB power on/USB wake up
1-2 | Support
2-3 | No Support
Key:5VDUAL for ICH2,PCI,CNR
5VDUAL1 for KB/MS,USB
VR3 LT1087S-0.8A
EC27 10U/16VS
BC111 104P
R253 470
R254 220
EC28 10U/16VS
BC122 104P
Micro-Star
MS6315
Rev 0C
Document Number
System Voltage Regulators
Last Revision Date: Thursday, August 31, 2000
Sheet 31 of 34

Front Panel & Power Connector

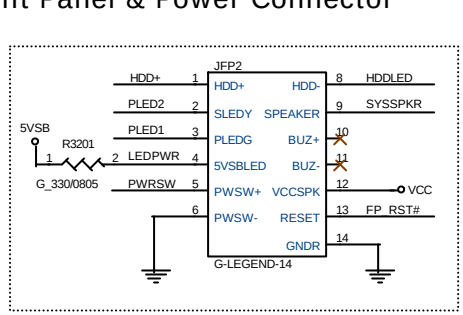

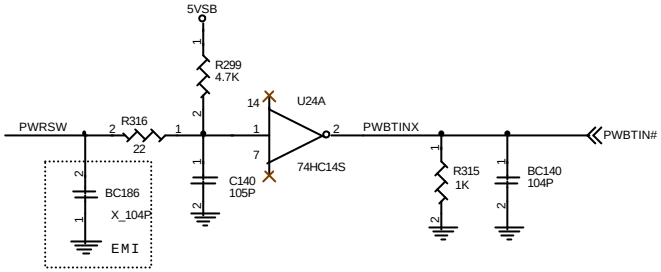

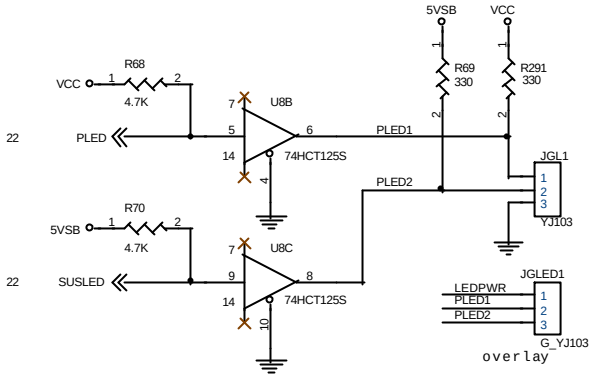

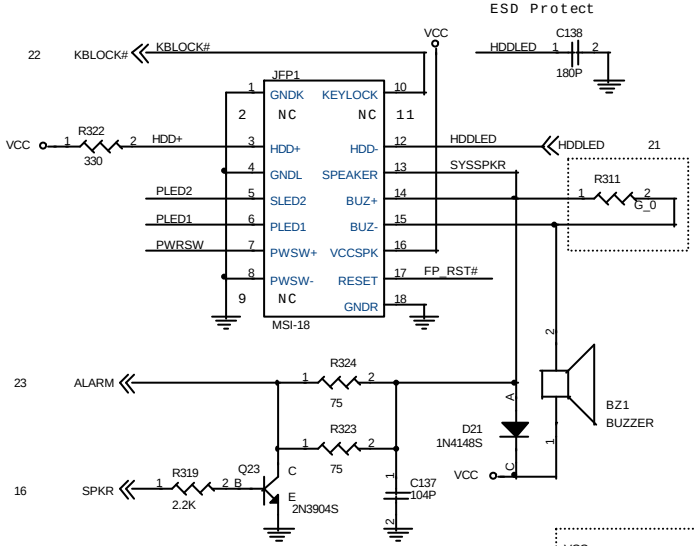

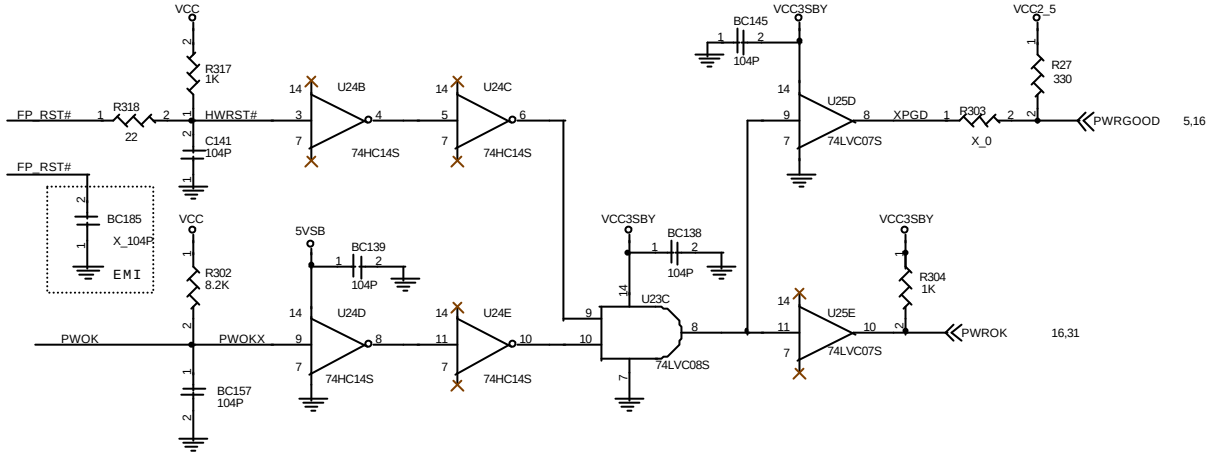

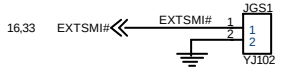

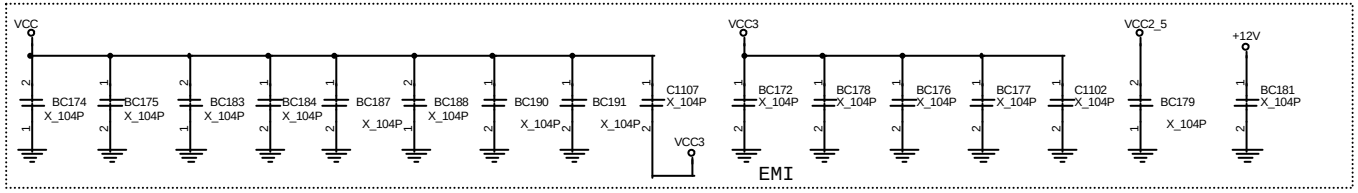

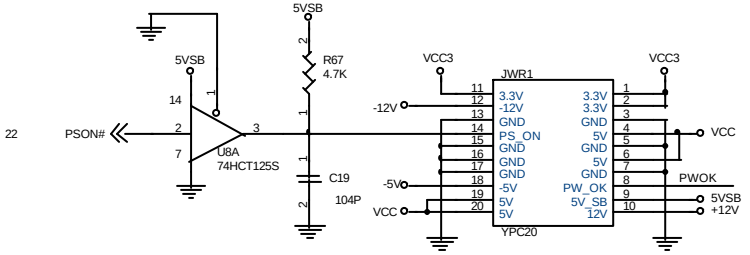

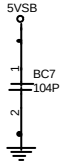

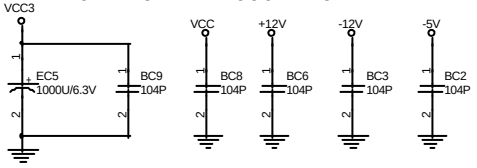

Micro-Star	Title: MS6315	Rev: 0C
Document Number: Front Panel and ATX power Connector		
Last Revision Date: Thursday, August 31, 2000	Sheet 32 of 34	

PULL-UP RESISTORS

PCI BUS

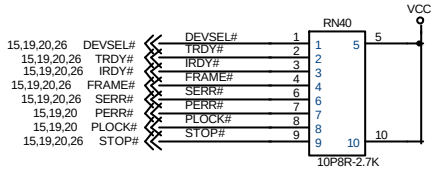

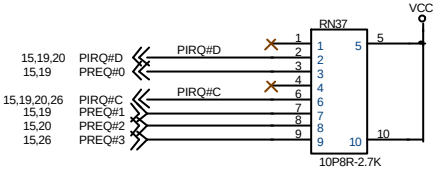

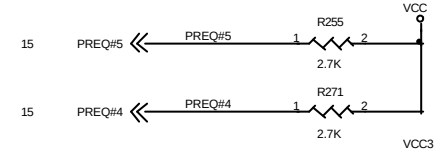

ICH

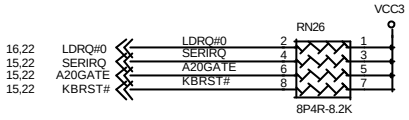

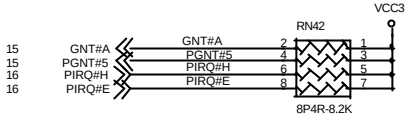

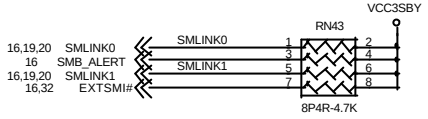

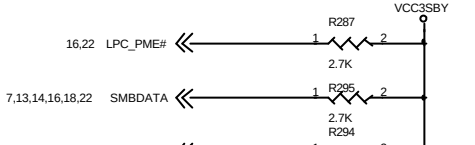

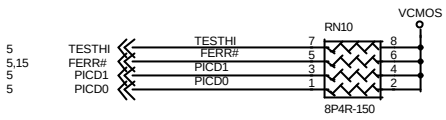

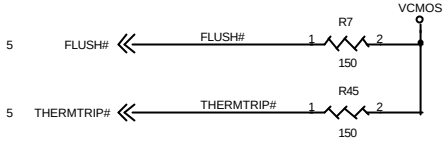

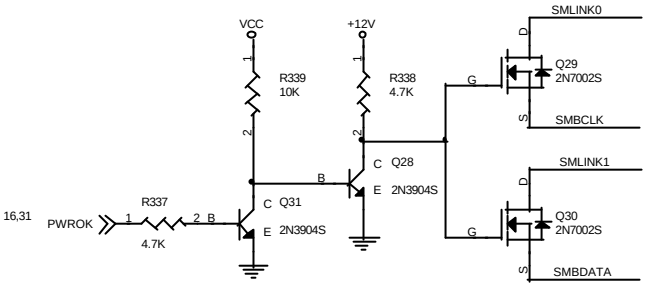

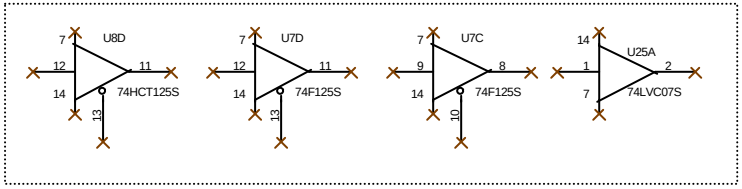

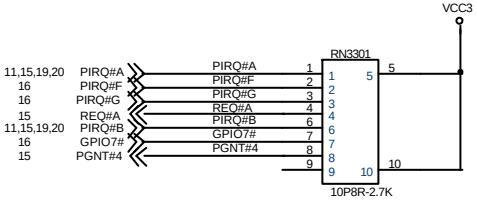

Micro-Star	Title: MS6315	Rev: 10A
Document Number: Pull-Up Resistors		
Last Revision Date: Friday, September 08, 2000	Sheet 33 of 34	

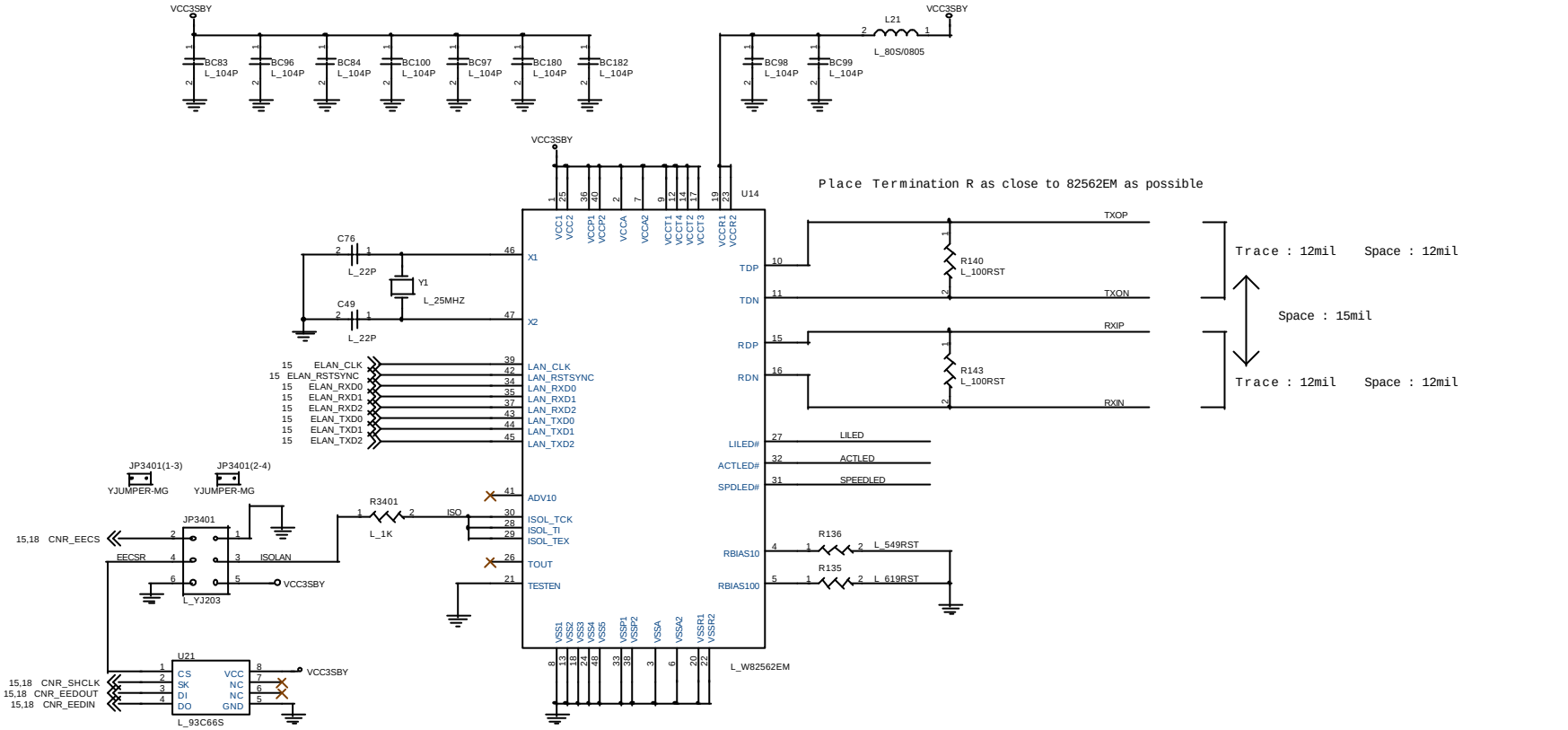

JP3401	On board LAN
1-3,2-4	Enable
3-5,4-6	Disable

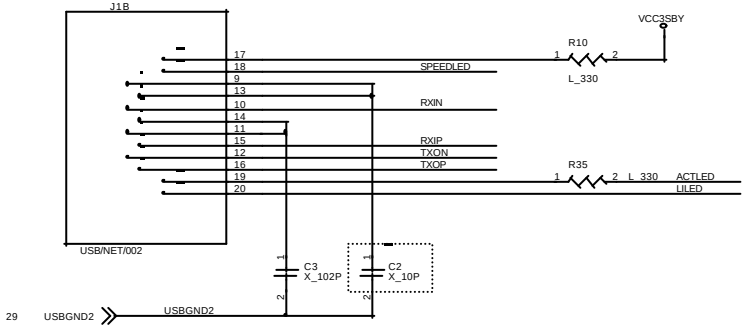

Micro-Star	Title: MS6315		Rev: 0C
Document Number: LAN Connector & I562EM (Kinnereth+)			
Last Revision Date: Monday, August 07,2000	Sheet 34 of 34		

MS-6315 Micro-ATX

Intel PPGA 370 Processor
Intel 815E/815EP Chipset
Winbond 83627HF-AW LPC I/O
ICH2 LAN Controller + Kinnereth

Last Schematic Update Date:
02/19/2001

Model option table

Model type	Function	BOM Config	ERP BOM No.
MS6315	Std(wo/lan,D-led)	Cfg6315-30A-STD	50/60 16315-18S
MS6315	Option:G(815E)	Cfg6315-30A-G	50/60 16315-19S

Stantard=Wo/LAN,Wo/D-LED,W/815EP For MSI

Model type	Function	BOM Config	ERP BOM No.
MS6315(L2)	Std(wo/lan,D-led)	Cfg6315L2-30A-STD	50/60 16315-070
MS6315(L2)	Option:L (w/lan,D-led)	Cfg6315L2-30A-L	50/60 16315-080

Stantard=Wo/LAN,Wo/D-LED,W/815EP For Legend

Title	Page
Cover Sheet	1
Block Diagram	2
GPIO SPEC	3
370PGA Socket	4,5
GTL Termination	6
Clock Synthesizer	7
GMCH	8,9,10
AGP / AIMM Display Cache	11
Graphics Connectors	12
System Memory	13,14,15
ICH	16,17
FWH	18
CNR Riser	19
PCI Connectors	20,21
ATA66 Connectors	22
LPC I/O	23
Hardware monitor	24
Parallel / Serial Port	25
Keyboard/Mouse Connectors	26
PCI Audio Controllor	27
AC'97 Codec	28
Audio/Game Port	29
USB HUB & USB Connectors	30
VRM 8.4	31
Voltage Regulators	32
Front Panel	33
Pull-up Resistors	34
LAN	35
Option & Manul parts	36,37

Block Diagram

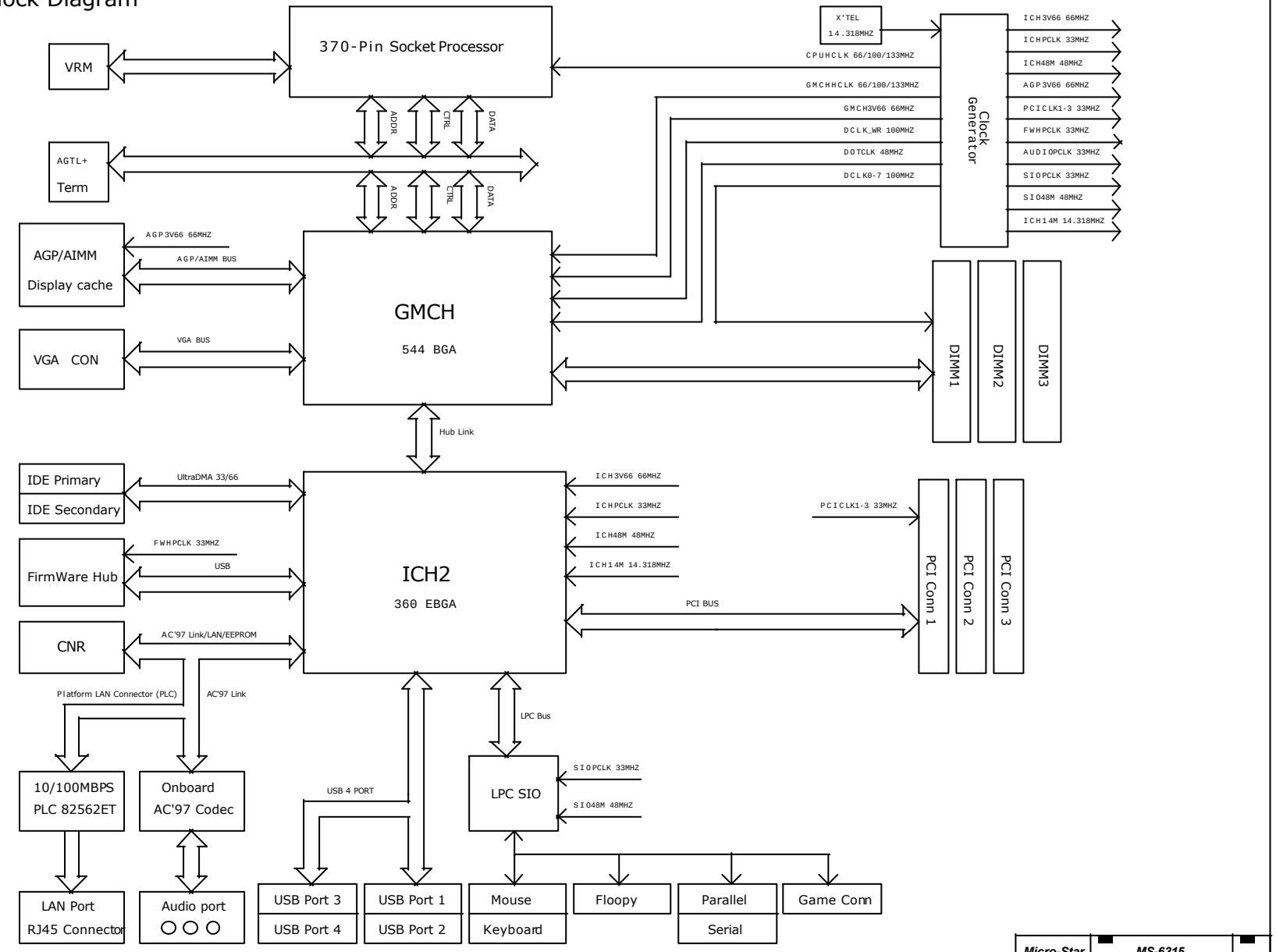

Micro-Star	MS-6315	3.0A
	Block Diagram	
Thursday, January 04, 2001	2	37

General Purpose I/O Spec.

ICH

GPIO Pin	Type	Function
GPIO 0	I	Pull up (REQ#A)
GPIO 1	I	PREQ#5
GPIO 2~4	I	NC
GPIO 5	I	NC
GPIO 6	I	NC
GPIO 7	I	NC
GPIO 8	I	LAN Wake Up
GPIO 9	I	Not Implemented
GPIO 10	I	Not Implemented
GPIO 11	I	SMB_ALERT
GPIO 12	I	External SMI
GPIO 13	I	LPC PME
GPIO 14~15	I	Not Implemented
GPIO 16	O	Pull up(GNT#A)
GPIO 17	O	PGNT#5
GPIO 18~20	O	NC
GPIO 21	O	FAN Ctrl
GPIO 22	O	Pull up
GPIO 23	OD	BIOS update lock(H)/unlock(L)
GPIO 24	O	NC
GPIO 25	O	NC
GPIO 26	O	Not Implemented
GPIO 27	I/O	NC
GPIO 28	I/O	NC
GPIO 29~31	I/O	Not Implemented

PCI Config.

DEVICE	ICH INT Pin	IDSEL
PCI Slot 1	INTA# INTB# INTC# INTD#	AD16
PCI Slot 2	INTB# INTC# INTD# INTA#	AD17
PCI Slot 3	INTC# INTD# INTA# INTB#	AD18

FWH

GPIO Pin	Type	Function
GPI 0	I	ATA IDE 1 Detect
GPI 1	I	ATA IDE 2 Detect
GPI 2	I	GPI2=L GPI3=H Flash from FDD
GPI 3	I	GPI2=H GPI3=L Boot Auto clear CMOS

ICH2 SMLINK0,1 Connect to PCI2 for PCI card AOL

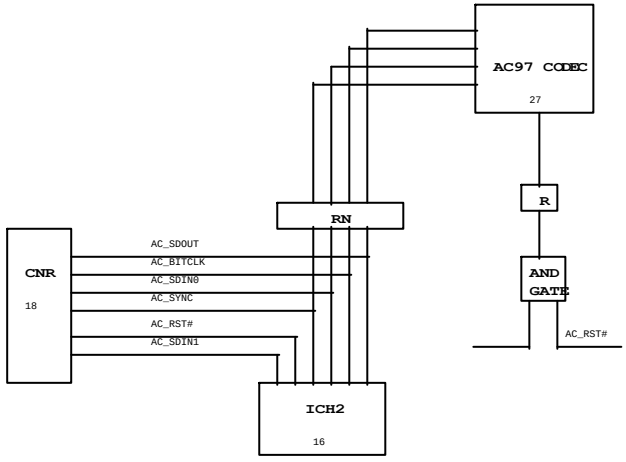

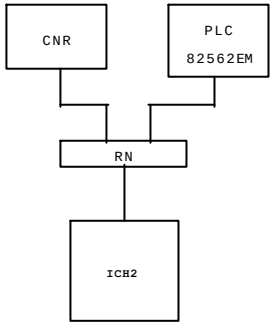

370PGA Socket Part 1

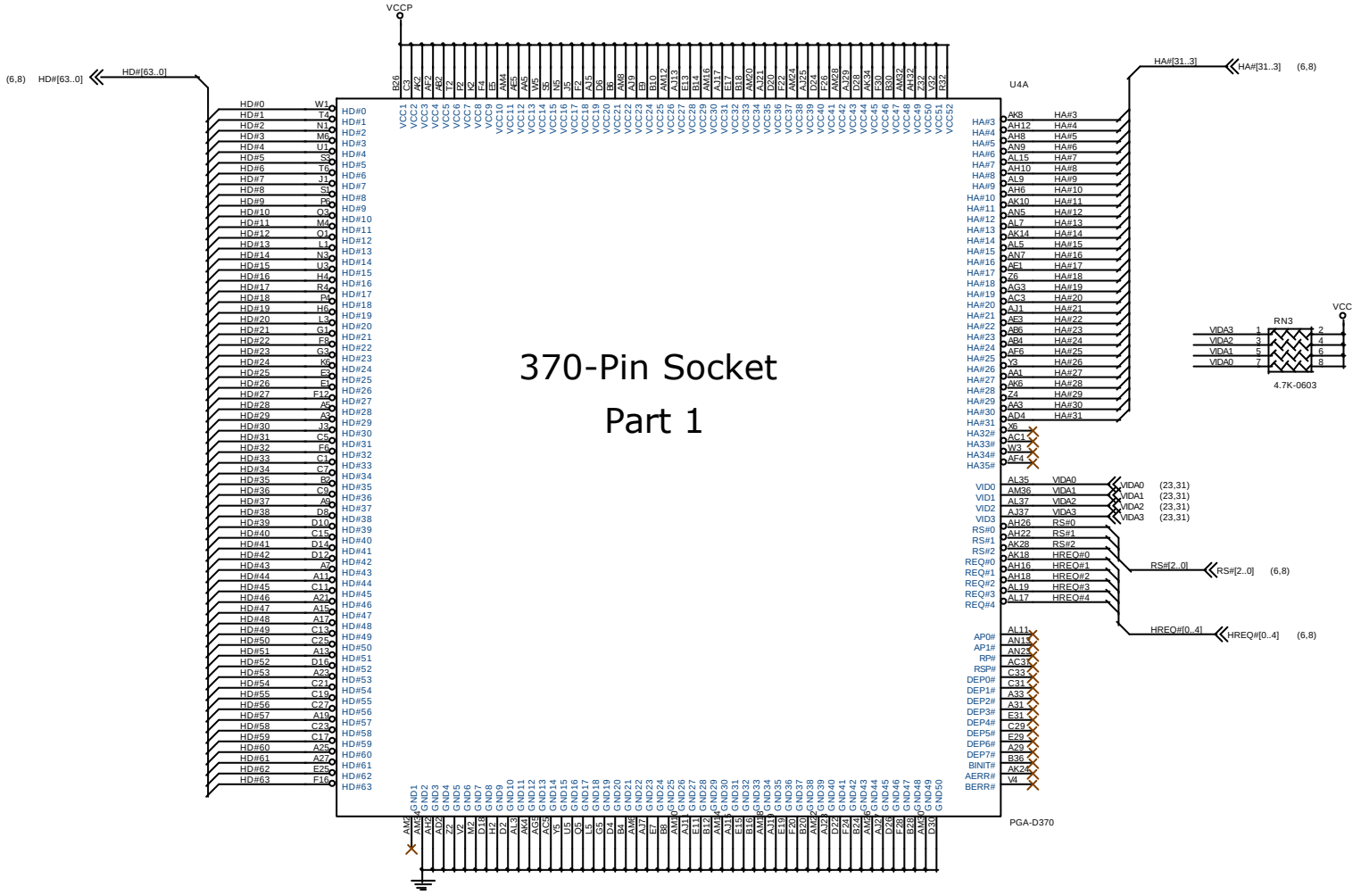

Micro-Star	Title: MS-6315		Rev: 3.0A
Document Number: SOCKET 370 PGA -1			
Last Revision Date: Monday, February 05,2001		Sheet 4 of 37	

370PGA Socket Part 2

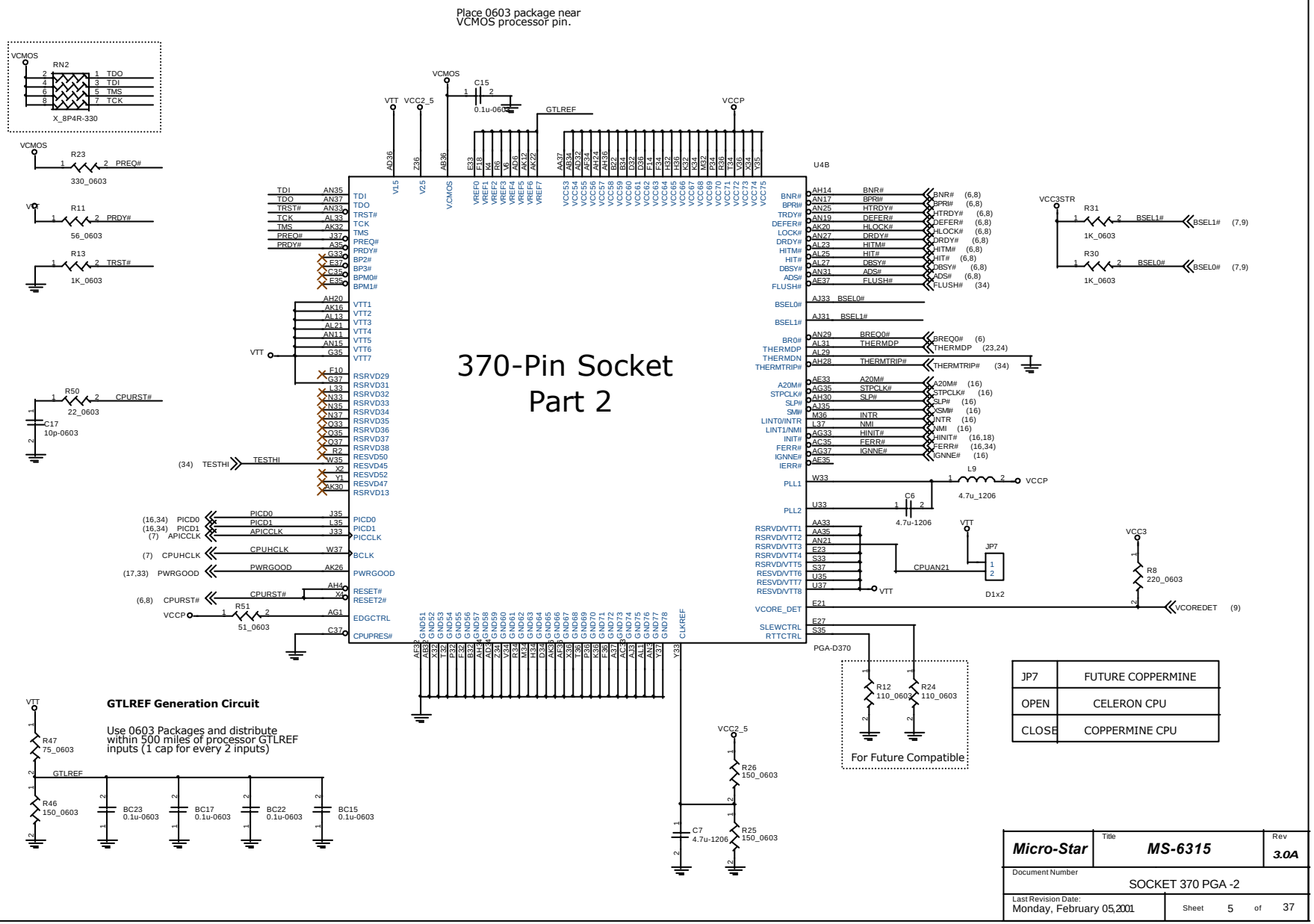

JP7	FUTURE COPPERMINE
OPEN	CELERON CPU
CLOSE	COPPERMINE CPU

Micro-Star	Title: MS-6315	Rev: 3.0A
Document Number: SOCKET 370 PGA -2		
Last Revision Date: Monday, February 05,2001	Sheet 5 of 37	

GTL Termination

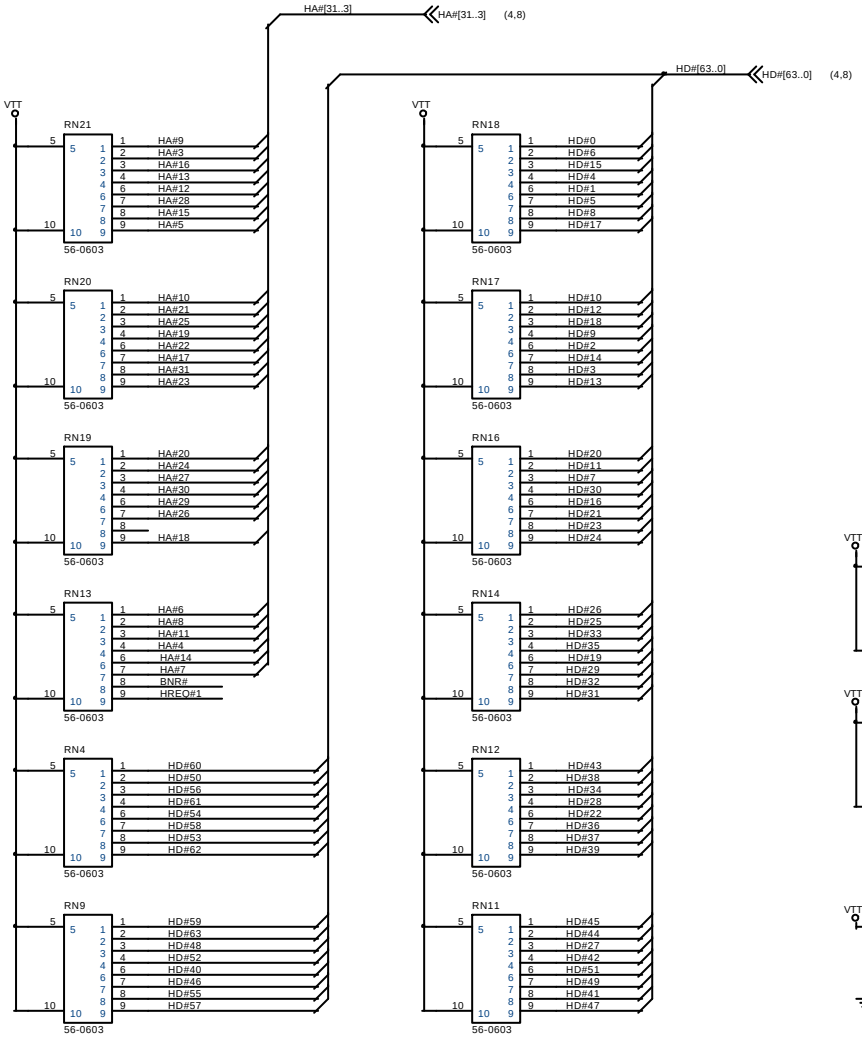

GTL VTT Bypass Capacitor

Every two R-packs add one 0.1U Cap.

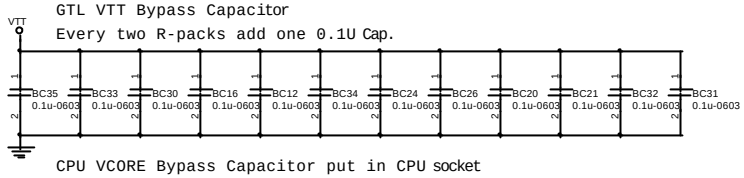

CPU VCORE Bypass Capacitor put in CPU socket

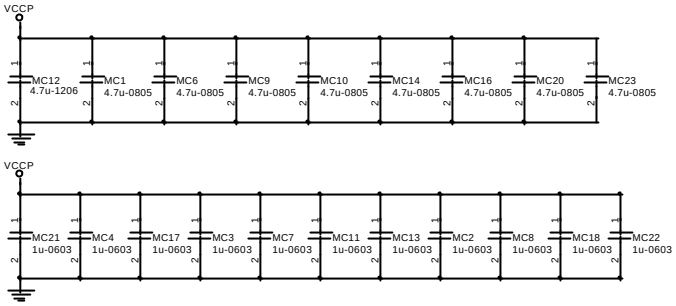

For VCCP

11 PCS 105P Cap. Placement

9 PCS 4.7U/0805 Cap. Placement

1 PCS 10U/1206 Cap. Placement

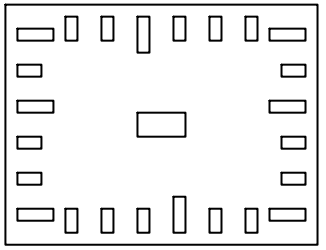

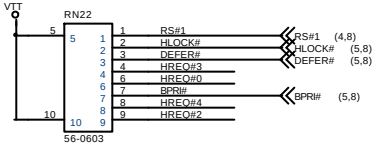

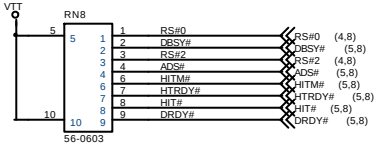

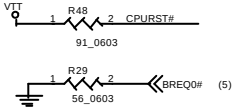

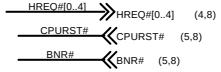

Micro-Star	Title: MS-6315	Rev: 3.0A
Document Number: GTL Termination		
Last Revision Date: Monday, February 05,2001	Sheet 6 of 37	

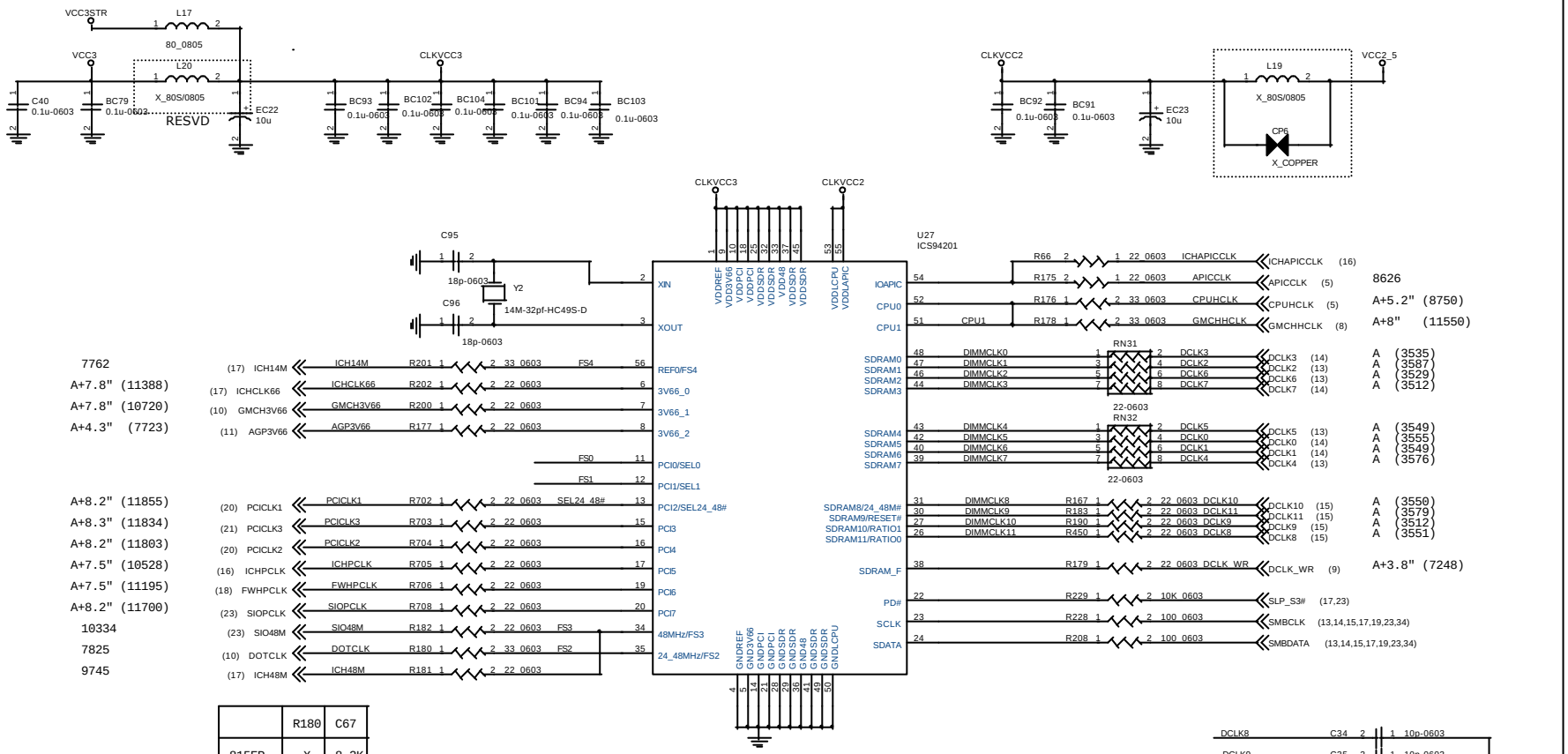

	R180	C67
815EP	X	8.2K
815E	33	X

key:The GMCH power on strapping I/F on DRAM I/F, so when enter STR mode that ICH loss power ,although PD# is asserted but all clock will not be keep greater than 3ms .

refer to FM-1776 page 134

Setting CLK Gen. Frequency by CPU stuff R184,R156

FS4	FS3	FS2	FS1	FS0	CPU	SDRAM
0	0	0	1	0	66.8	100.2
0	1	0	1	0	100.2	100.2
1	0	0	1	0	133.6	133.6
1	1	0	1	0	133.6	100.2

Micro-Star	Title: MS-6315	Rev: 3.0A
Document Number: Clock Synthesizer		
Last Revision Date: Monday, February 05,2001	Sheet 7 of 37	

82815, PART 1 : HOST INTERFACE

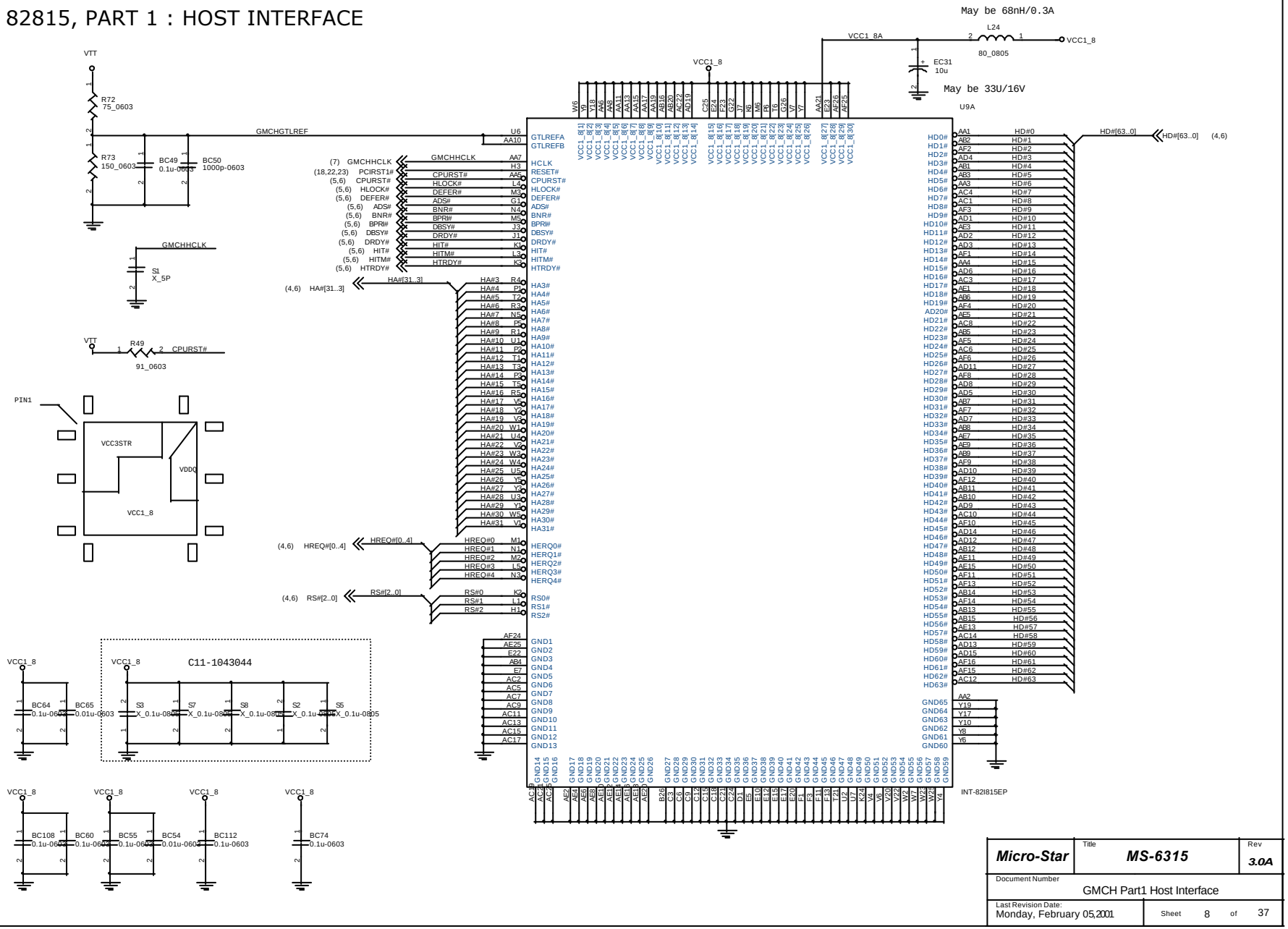

Micro-Star	Title: MS-6315	Rev: 3.0A
Document Number: GMCH Part1 Host Interface		
Last Revision Date: Monday, February 05,2001	Sheet 8 of 37	

GMCH, PART 2 : SYSTEM MEMORY

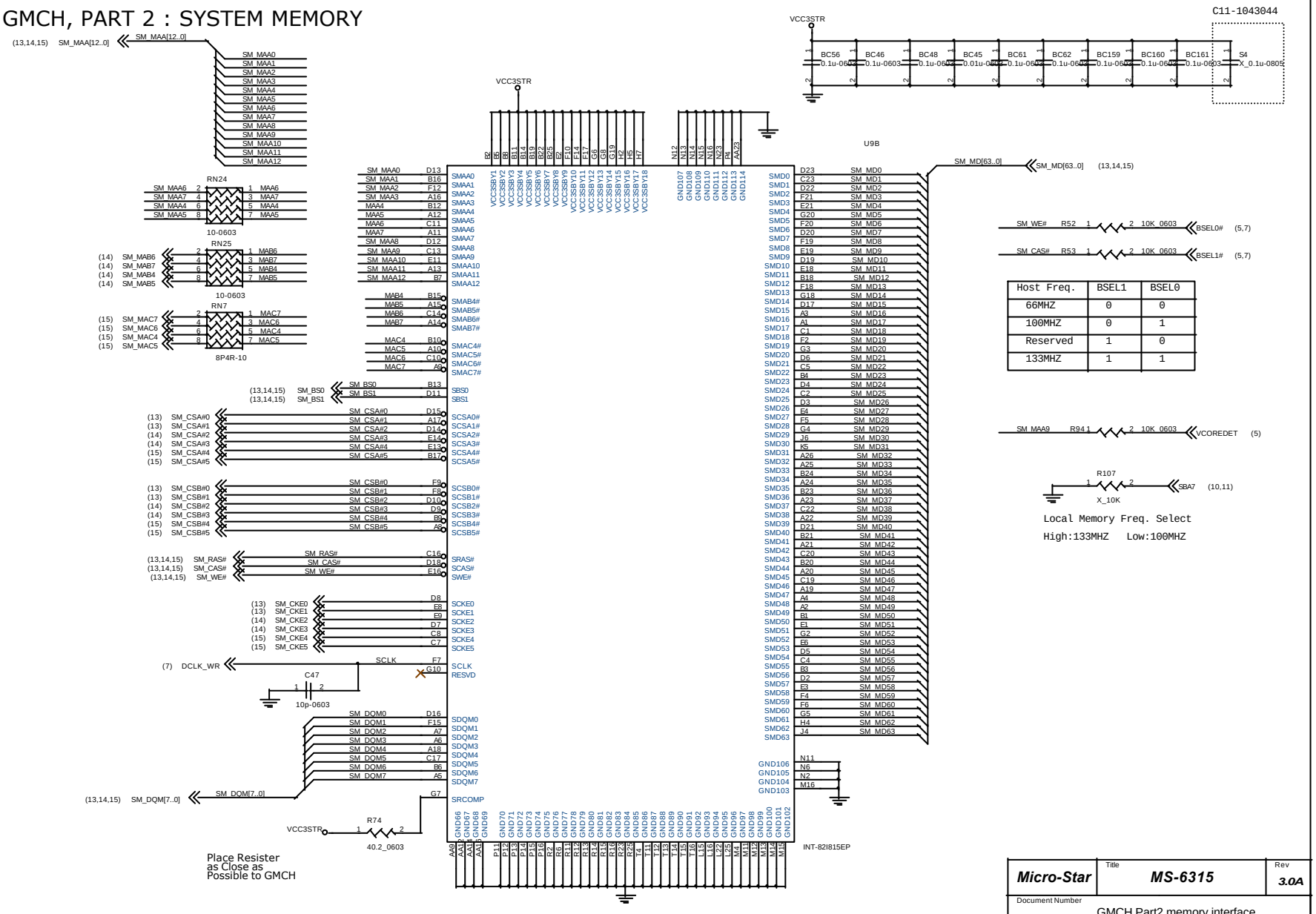

Host Freq.	BSEL1	BSEL0
66MHZ	0	0
100MHZ	0	1
Reserved	1	0
133MHZ	1	1

Local Memory Freq. Select
High:133MHZ Low:100MHZ

Micro-Star	Title: MS-6315	Rev: 3.0A
Document Number: GMCH Part2 memory interface		
Last Revision Date: Monday, February 05,2001	Sheet 9 of 37	

GMCH PART 3 : AGP & VIDEO Interface & HUB link

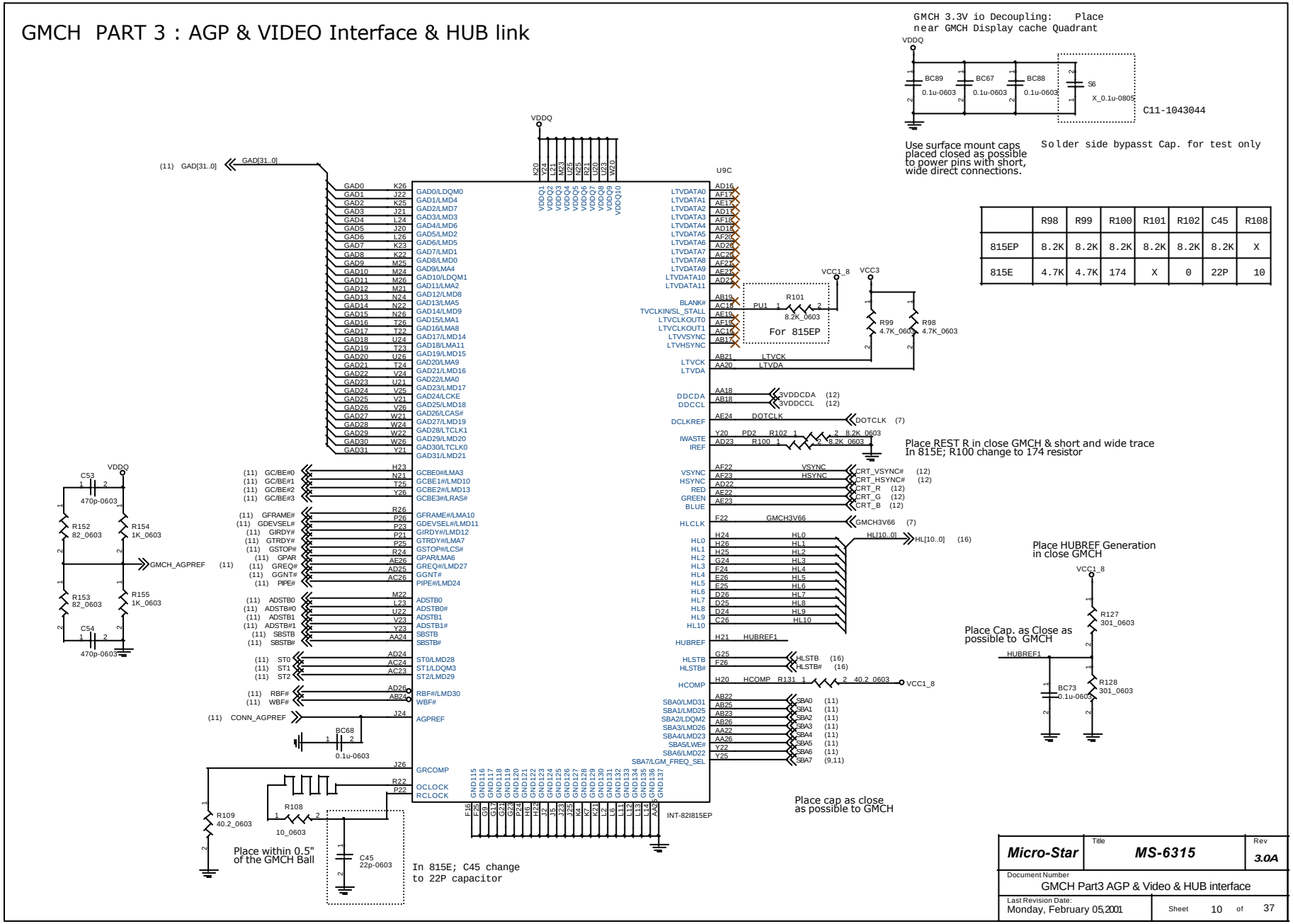

	R98	R99	R100	R101	R102	C45	R108
815EP	8.2K	8.2K	8.2K	8.2K	8.2K	8.2K	X
815E	4.7K	4.7K	174	X	0	22P	10

Micro-Star	Title: MS-6315	Rev: 3.0A
Document Number: GMCH Part3 AGP & Video & HUB interface		
Last Revision Date: Monday, February 05,2001	Sheet 10 of 37	

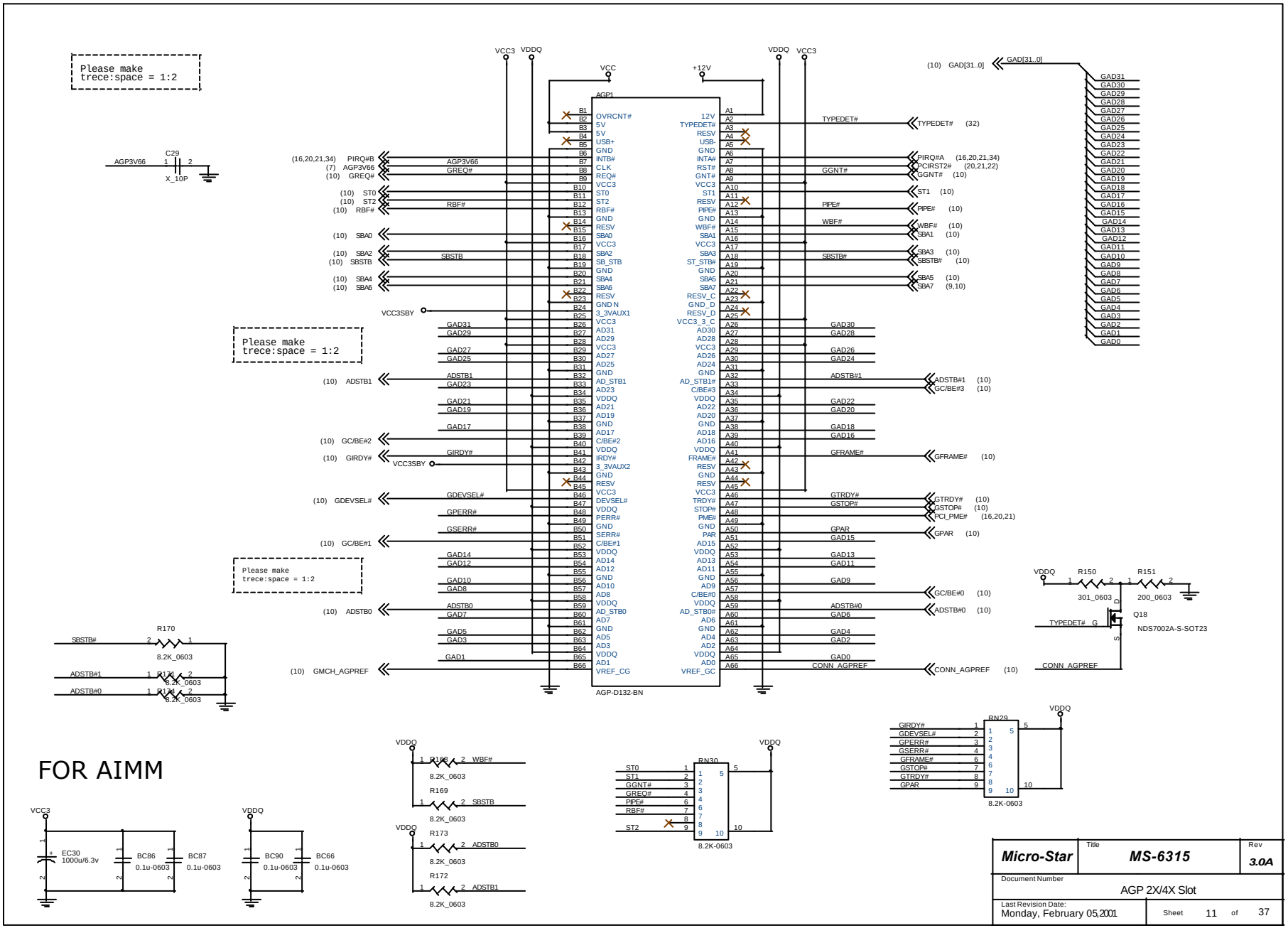

Micro-Star	Title: MS-6315		Rev: 3.0A
Document Number: AGP 2X/4X Slot			
Last Revision Date: Monday, February 05,2001		Sheet 11 of 37	

Video Connector

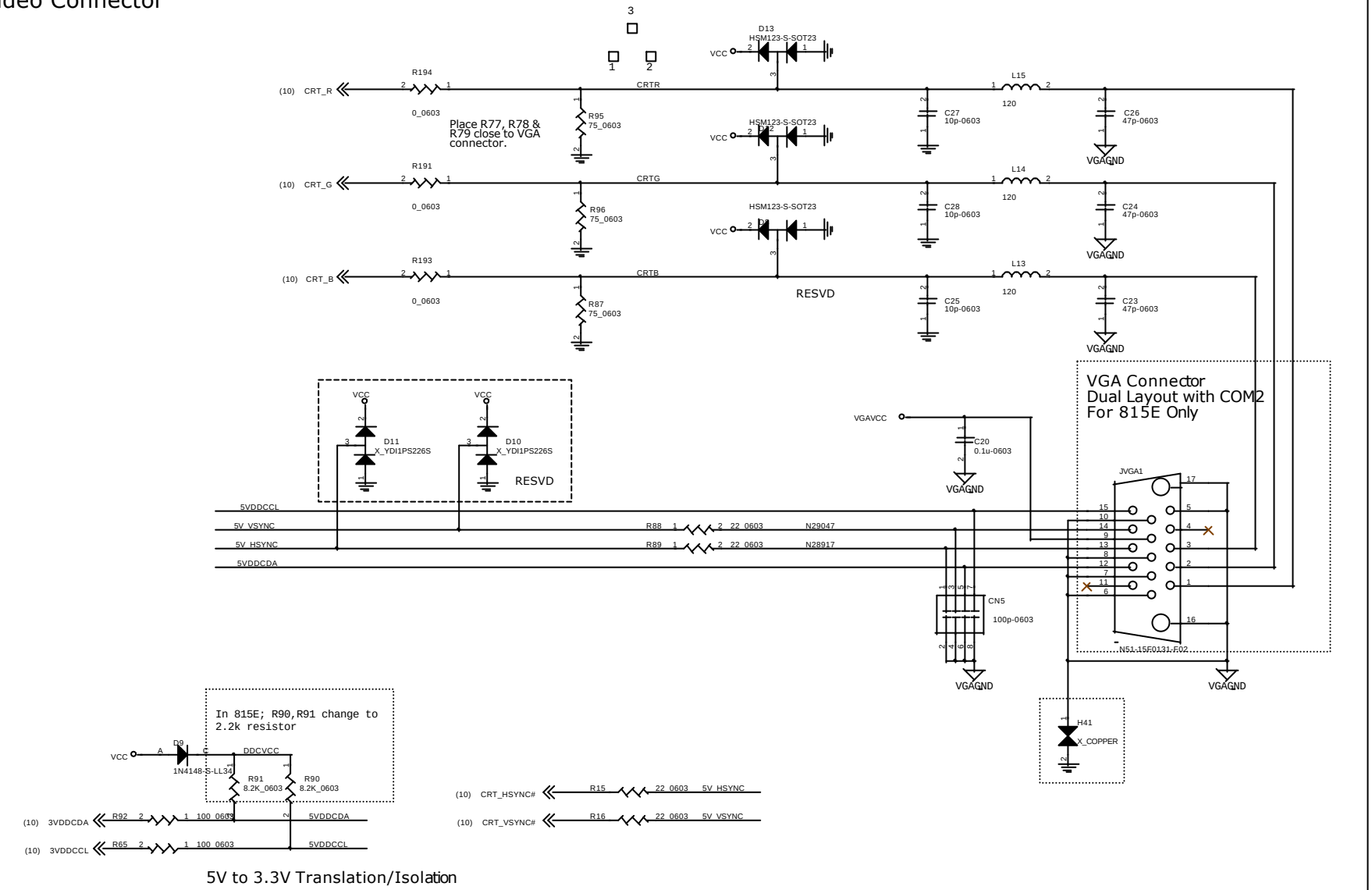

5V to 3.3V Translation/Isolation

Micro-Star	Title: MS-6315	Rev: 3.0A
Document Number: Video Connector		
Last Revision Date: Monday, February 05,2001	Sheet 12 of 37	

DIMM1

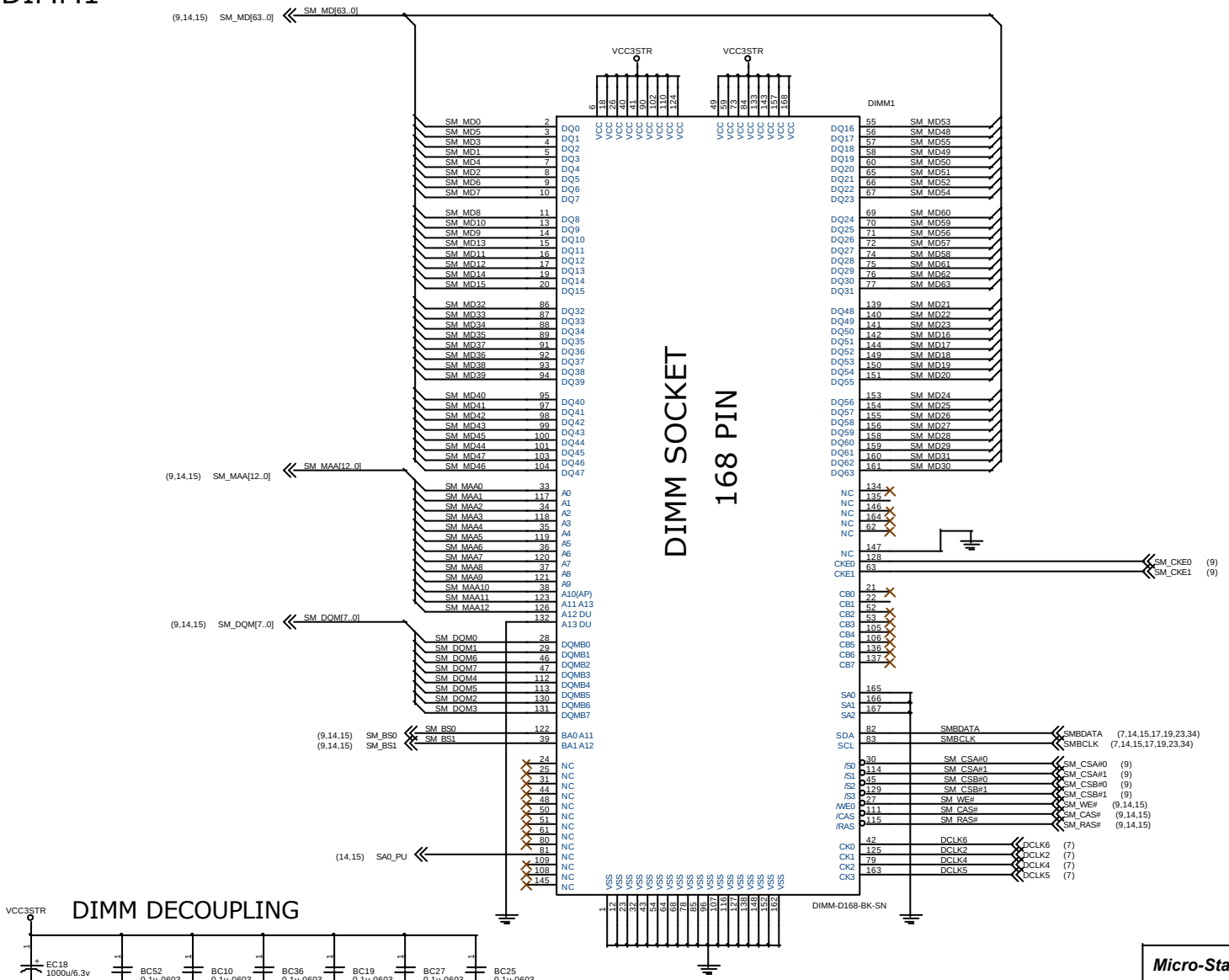

DIMM DECOUPLING

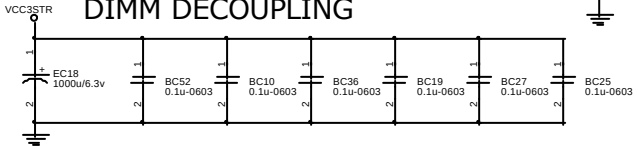

Micro-Star	Title: MS-6315	Rev: 3.0A
Document Number: System Memory : DIMM1		
Last Revision Date: Monday, February 05,2001	Sheet 13 of 37	

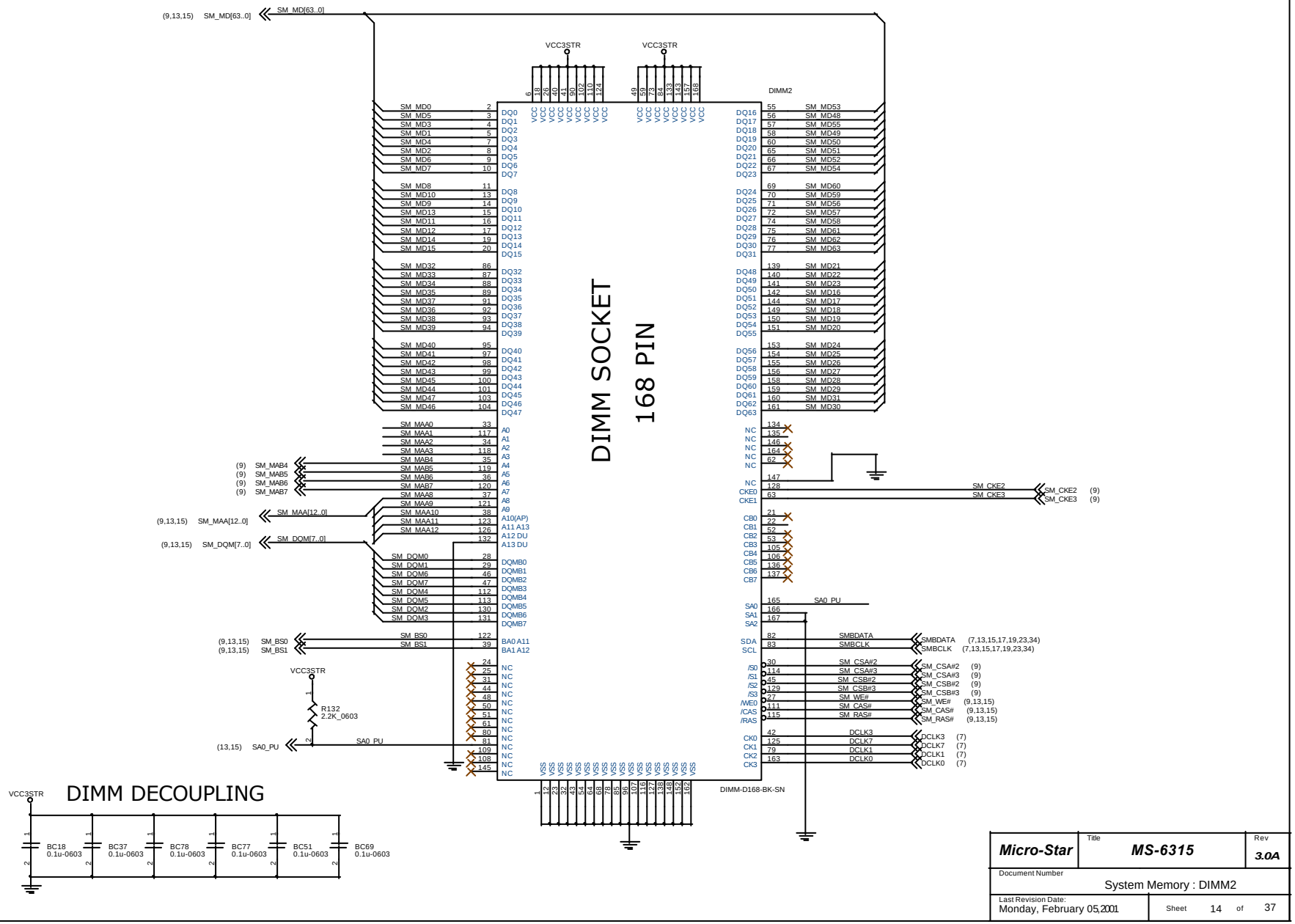
DIMM SOCKET
168 PIN
DIMM2
DIMM-D168-BK-SN
(9,13,15) SM_MD[63..0]
SM_MD[63..0]
VCC3STR
SM_MD0 SM_MD5 SM_MD3 SM_MD1 SM_MD4 SM_MD2 SM_MD6 SM_MD7
SM_MD8 SM_MD10 SM_MD9 SM_MD13 SM_MD11 SM_MD12 SM_MD14 SM_MD15
SM_MD32 SM_MD33 SM_MD34 SM_MD35 SM_MD37 SM_MD36 SM_MD38 SM_MD39
SM_MD40 SM_MD41 SM_MD42 SM_MD43 SM_MD45 SM_MD44 SM_MD47 SM_MD46
SM_MD53 SM_MD48 SM_MD55 SM_MD49 SM_MD50 SM_MD51 SM_MD52 SM_MD54
SM_MD60 SM_MD59 SM_MD56 SM_MD57 SM_MD58 SM_MD61 SM_MD62 SM_MD63
SM_MD21 SM_MD22 SM_MD23 SM_MD16 SM_MD17 SM_MD18 SM_MD19 SM_MD20
SM_MD24 SM_MD25 SM_MD26 SM_MD27 SM_MD28 SM_MD29 SM_MD31 SM_MD30
SM_MAA0 SM_MAA1 SM_MAA2 SM_MAA3 SM_MAB4 SM_MAB5 SM_MAB6 SM_MAB7 SM_MAA8 SM_MAA9 SM_MAA10 SM_MAA11 SM_MAA12
(9) SM_MAB4 (9) SM_MAB5 (9) SM_MAB6 (9) SM_MAB7
(9,13,15) SM_MAA[12..0]
SM_MAA[12..0]
(9,13,15) SM_DQM[7..0]
SM_DQM[7..0]
SM_DQM0 SM_DQM1 SM_DQM6 SM_DQM7 SM_DQM4 SM_DQM5 SM_DQM2 SM_DQM3
SM_BS0 SM_BS1
(9,13,15) SM_BS0
(9,13,15) SM_BS1
VCC3STR
R132
2.2K_0603
(13,15) SA0_PU
SA0_PU
SM_CKE2 SM_CKE3
SM_CKE2 (9)
SM_CKE3 (9)
SA0_PU
SMBDATA SMBCLK
SMBDATA (7,13,15,17,19,23,34)
SMBCLK (7,13,15,17,19,23,34)
SM_CSA#2 SM_CSA#3 SM_CSB#2 SM_CSB#3 SM_WE# SM_CAS# SM_RAS#
SM_CSA#2 (9)
SM_CSA#3 (9)
SM_CSB#2 (9)
SM_CSB#3 (9)
SM_WE# (9,13,15)
SM_CAS# (9,13,15)
SM_RAS# (9,13,15)
DCLK3 DCLK7 DCLK1 DCLK0
DCLK3 (7)
DCLK7 (7)
DCLK1 (7)
DCLK0 (7)
DIMM DECOUPLING
VCC3STR
BC18 0.1u-0603
BC37 0.1u-0603
BC78 0.1u-0603
BC77 0.1u-0603
BC51 0.1u-0603
BC69 0.1u-0603
Micro-Star
Title
MS-6315
Rev
3.0A
Document Number
System Memory : DIMM2
Last Revision Date:
Monday, February 05,2001
Sheet 14 of 37

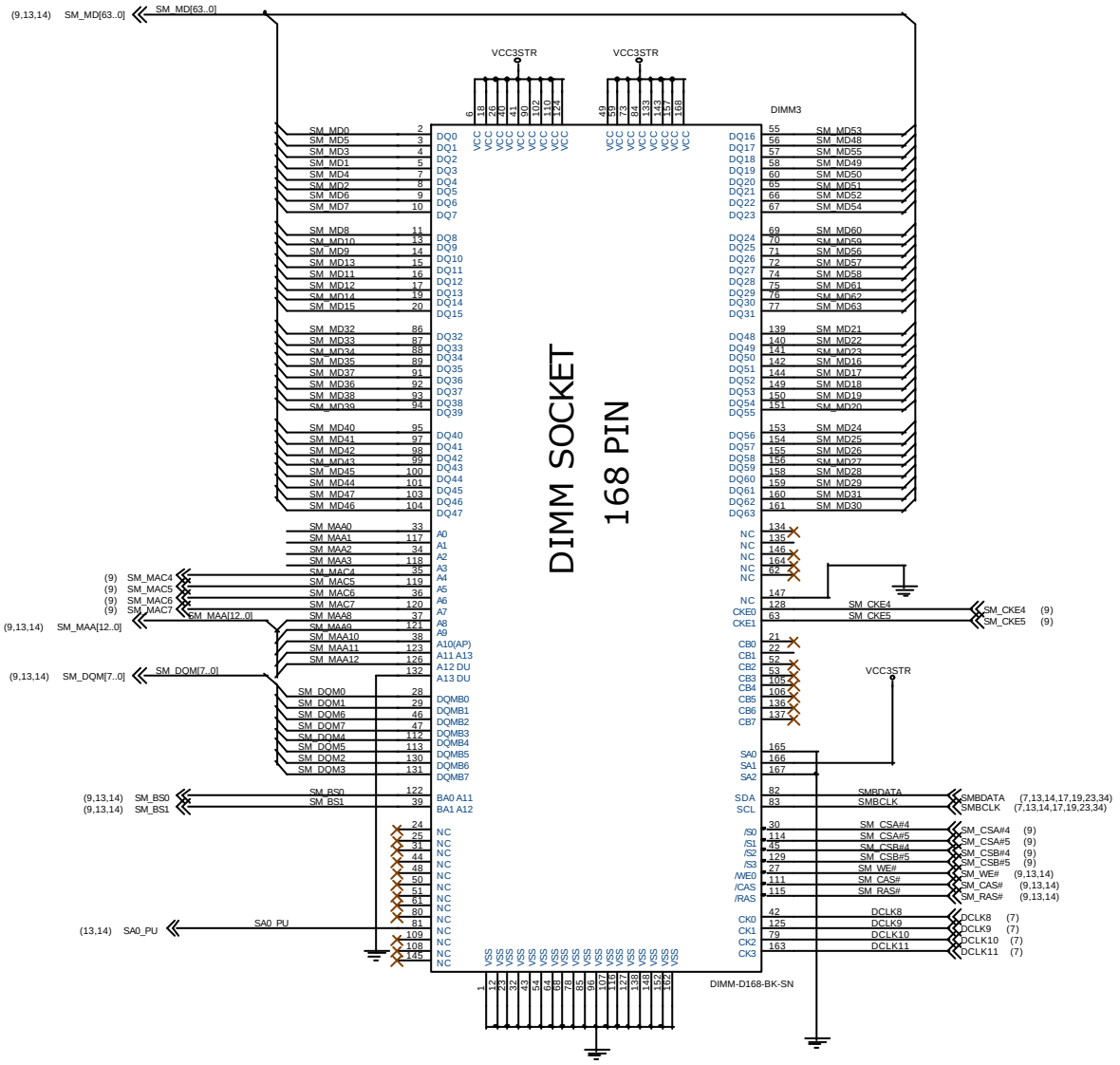

Micro-Star	Title: MS-6315		Rev: 3.0A
Document Number: System Memory : DIMM3			
Last Revision Date: Monday, February 05, 2001		Sheet 15 of 37	

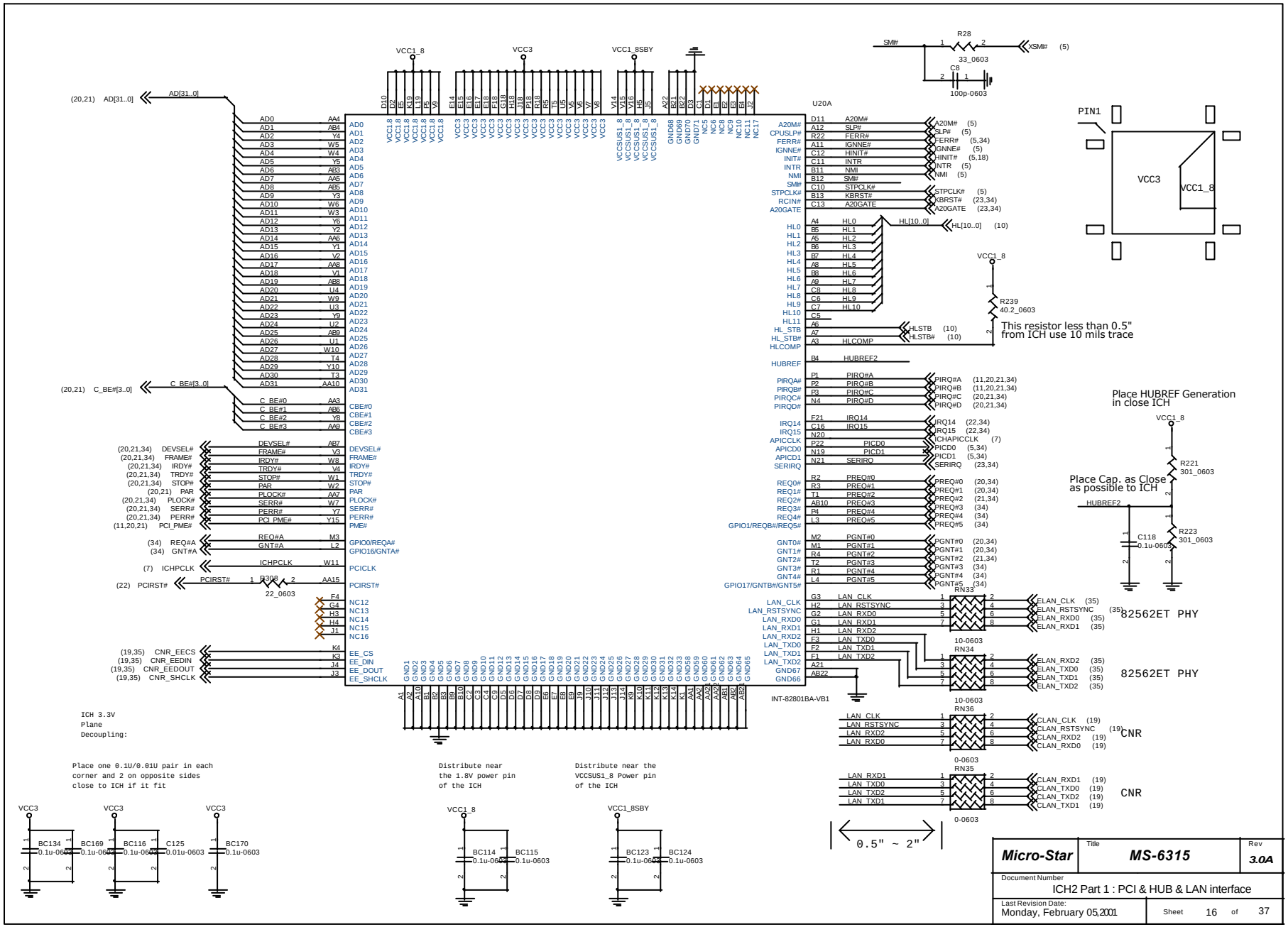
U20A
INT-82801BA-VB1
R28
33_0603
C8
100p-0603
R239
40.2_0603
This resistor less than 0.5" from ICH use 10 mils trace
PIN1
VCC3
VCC1_8
Place HUBREF Generation in close ICH
R221
301_0603
Place Cap. as Close as possible to ICH
R223
301_0603
C118
0.1u-0603
HUBREF2
RN33
RN34
RN36
RN35
10-0603
0-0603
82562ET PHY
82562ET PHY
CNR
CNR
0.5" ~ 2"
ICH 3.3V Plane Decoupling:
Place one 0.1U/0.01U pair in each corner and 2 on opposite sides close to ICH if it fit
Distribute near the 1.8V power pin of the ICH
Distribute near the VCCSUS1_8 Power pin of the ICH
BC134 0.1u-0603
BC169 0.1u-0603
BC116 0.1u-0603
C125 0.01u-0603
BC170 0.1u-0603
BC114 0.1u-0603
BC115 0.1u-0603
BC123 0.1u-0603
BC124 0.1u-0603
Micro-Star
MS-6315
3.0A
ICH2 Part 1 : PCI & HUB & LAN interface
Monday, February 05,2001
Sheet 16 of 37

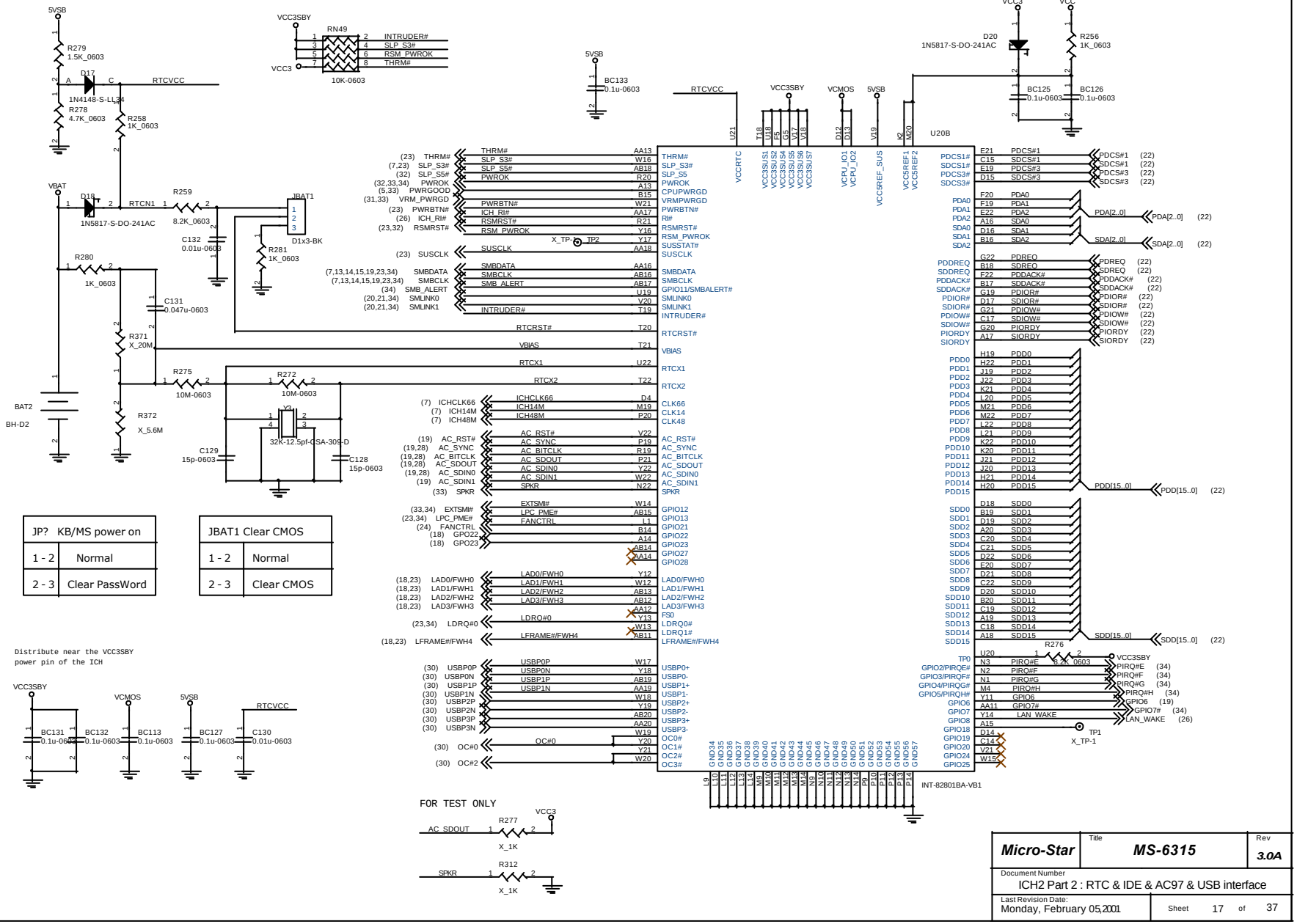

Micro-Star	Title: MS-6315	Rev: 3.0A
Document Number: ICH2 Part 2 : RTC & IDE & AC97 & USB interface		
Last Revision Date: Monday, February 05,2001	Sheet 17 of 37	

Firware Hub (FWH)

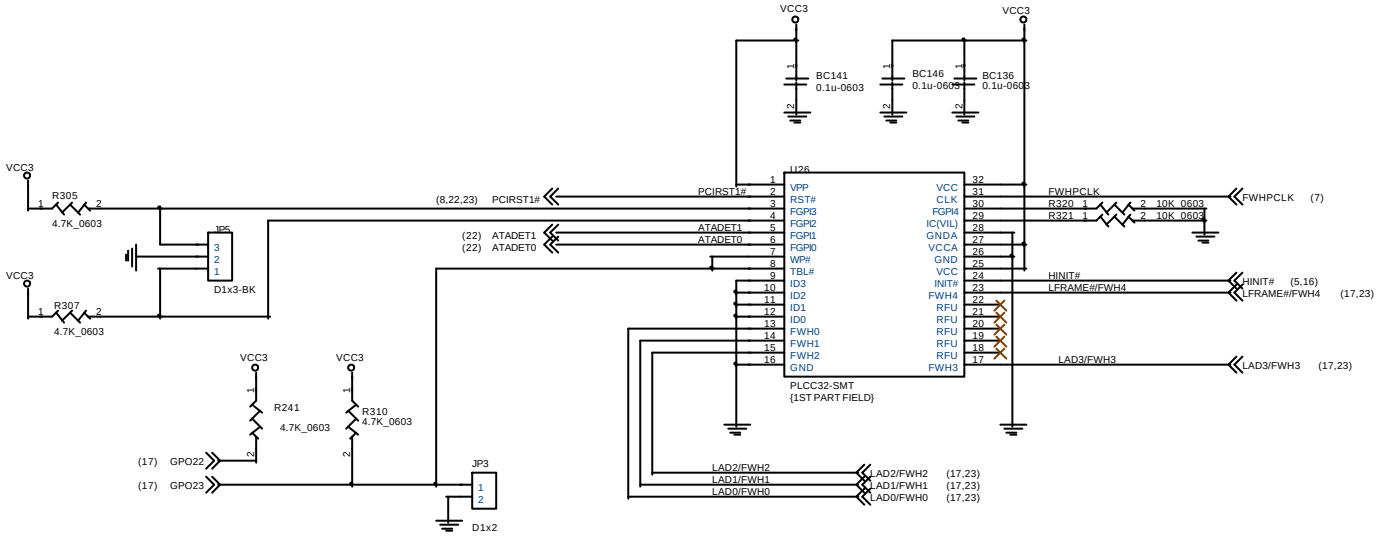

JP5 BIOS Update Configuration	
1 - 2	Normal Mode
2 - 3	Boot auto clear CMOS
OPEN	Flash from FDD

* default

JP3 BIOS Update	
SHORT	Locked
OPEN	Unlocked

* default

Micro-Star	Title: MS-6315	Rev: 3.0A
Document Number: Firware HUB (FWH)		
Last Revision Date: Monday, February 05,2001	Sheet 18 of 37	

CNR RISER

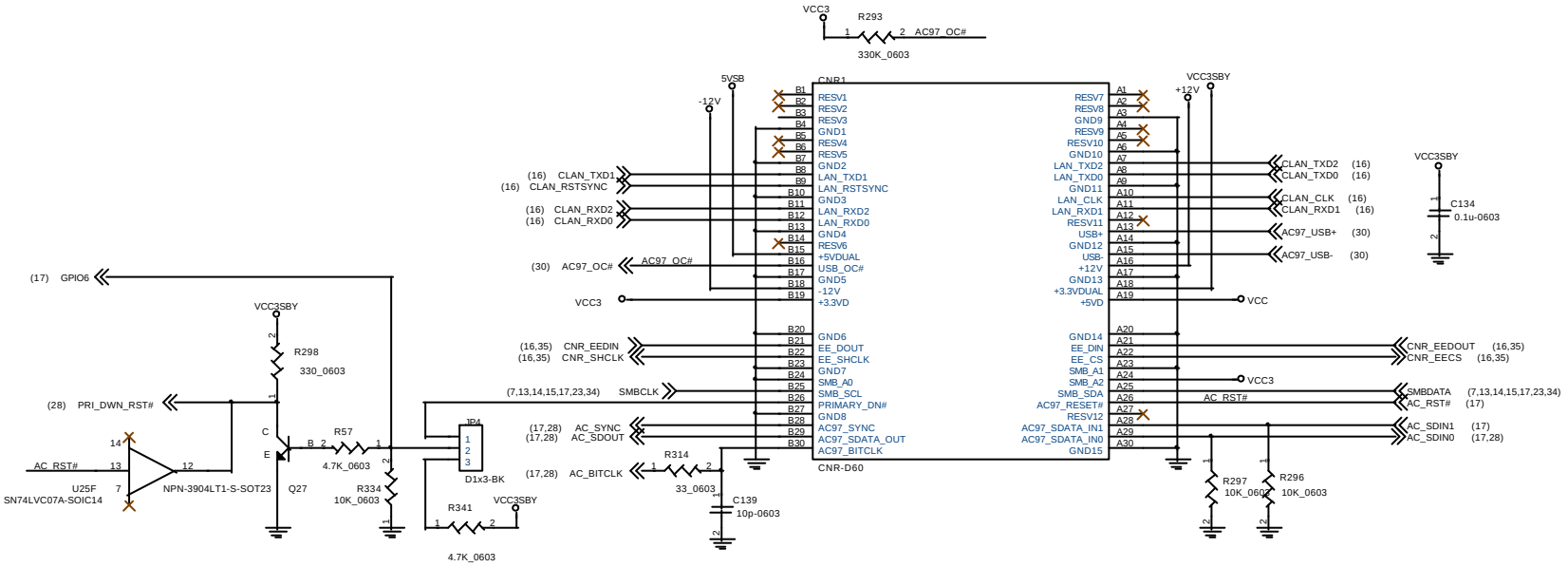

JP4	AUDIO DOWN
1 - 2	Auto mode
2 - 3	Primary audio codec onboard

Micro-Star	Title: MS-6315	Rev: 3.0A
Document Number: CNR Slot		
Last Revision Date: Monday, February 05,2001	Sheet 19 of 37	

PCI Connectors

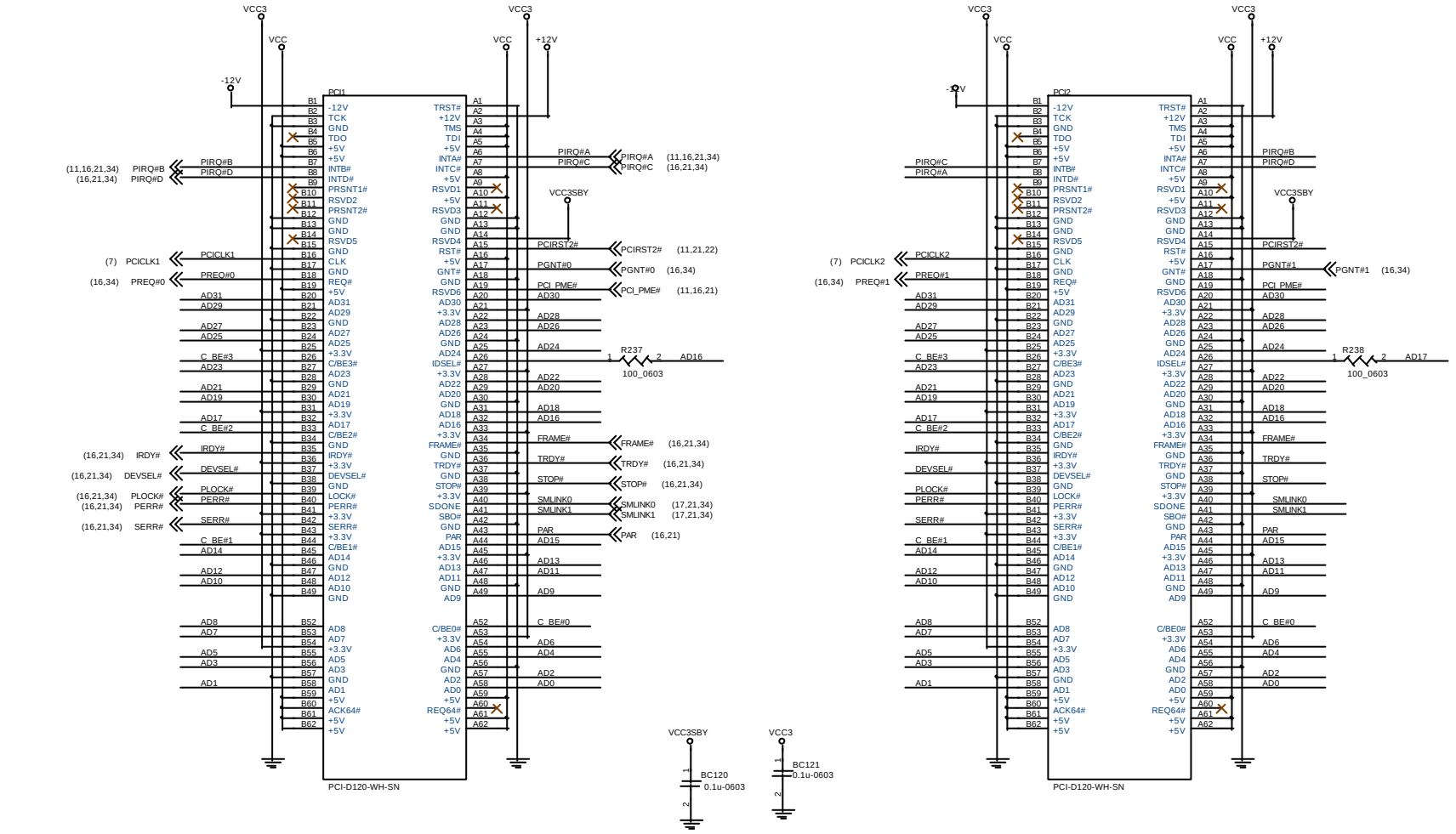

Micro-Star	Title: MS-6315		Rev: 3.0A
Document Number: PCI Slot 1 & 2			
Last Revision Date: Monday, February 05,2001		Sheet 20 of 37	

PCI Slot

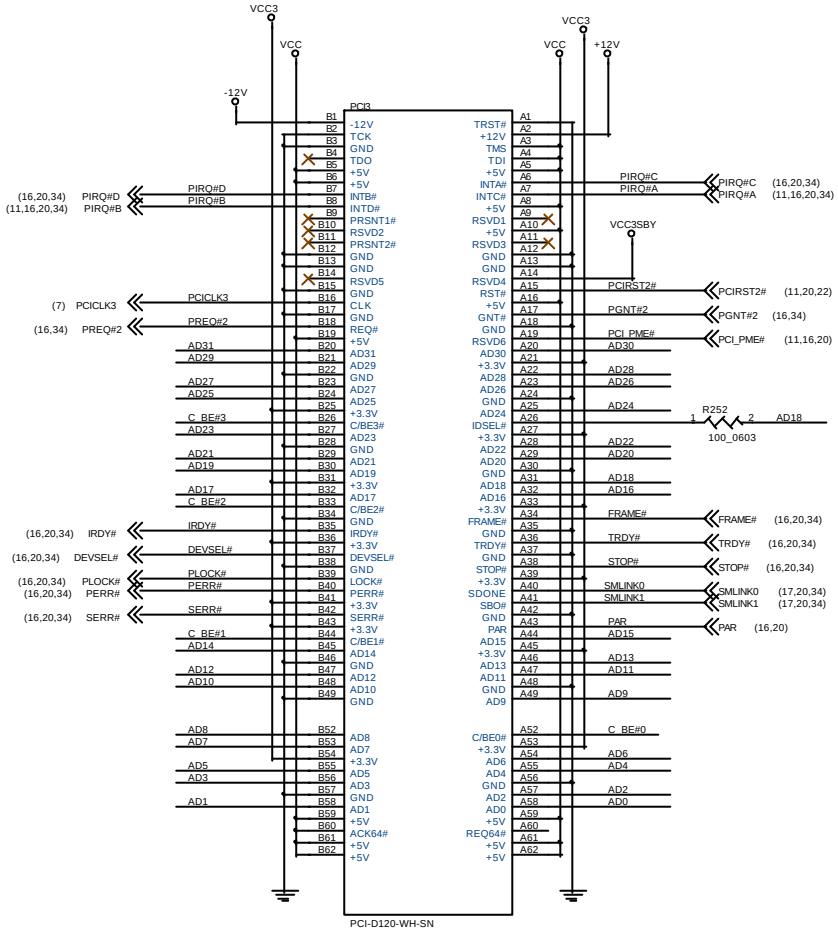

(16,20) AD[31..0] — AD[31..0]

(16,20) C_BE#[3..0] — C_BE#[3..0]

Micro-Star	Title: MS-6315	Rev: 3.0A
Document Number: PCI Slot 3		
Last Revision Date: Monday, February 05,2001	Sheet 21 of 37	

ATA66 IDE CONNECTORS

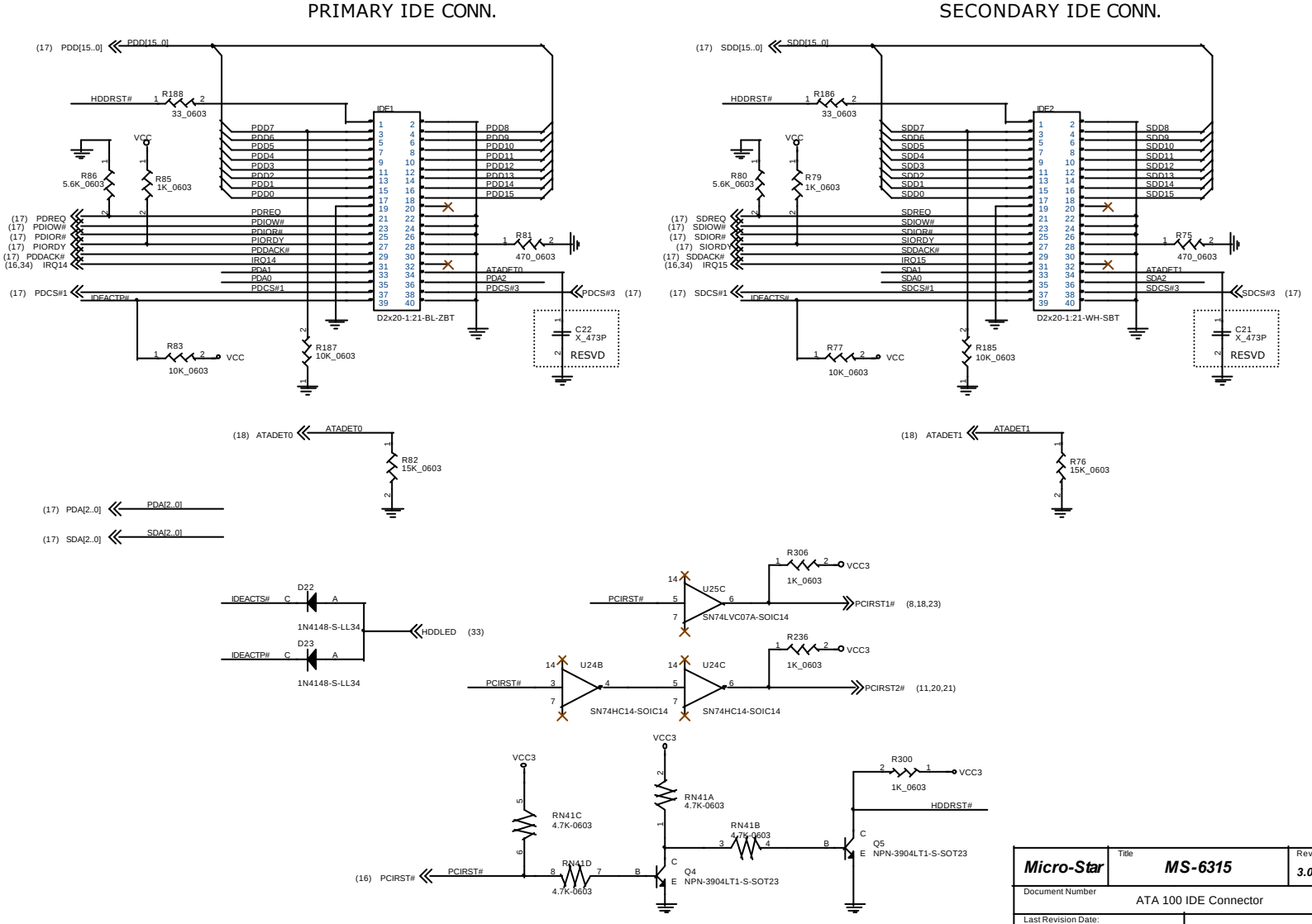

Micro-Star	Title: MS-6315	Rev: 3.0A
Document Number: ATA 100 IDE Connector		
Last Revision Date: Monday, February 05, 2001	Sheet 22 of 37	

Super I/O

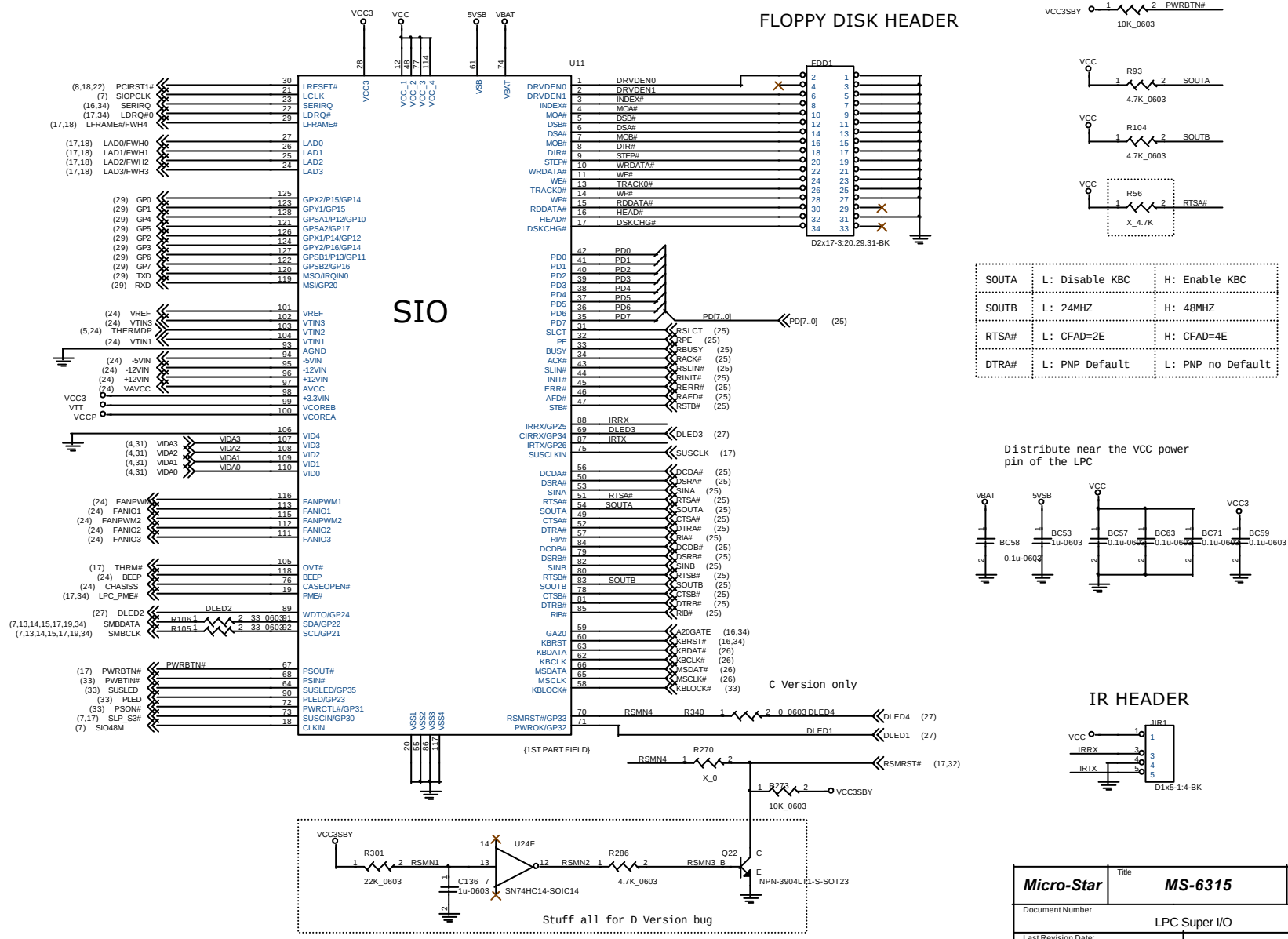

Micro-Star	Title: **MS-6315**	Rev: **3.0A**
Document Number: LPC Super I/O		
Last Revision Date: Monday, February 05,2001	Sheet 23 of 37	

Hardware Monitor

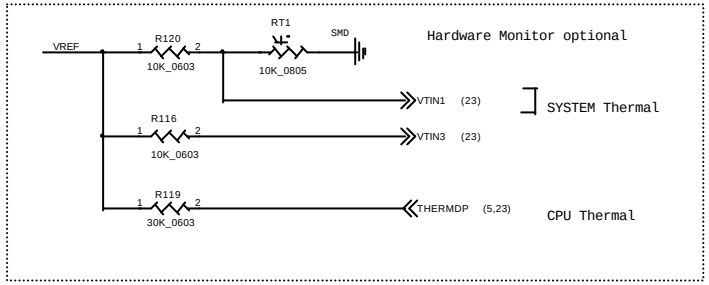

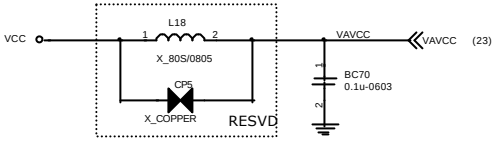

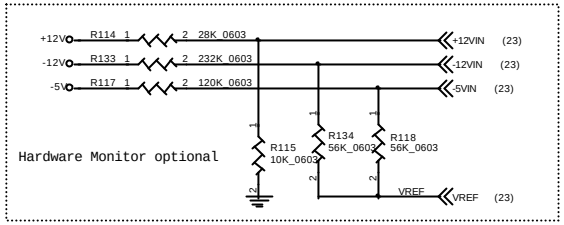

Chasiss Intrusion Header

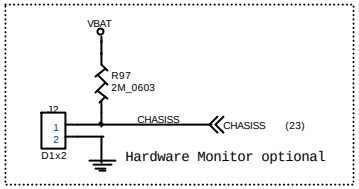

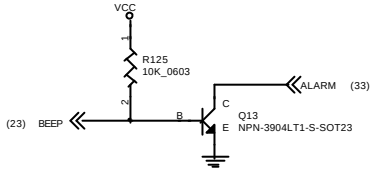

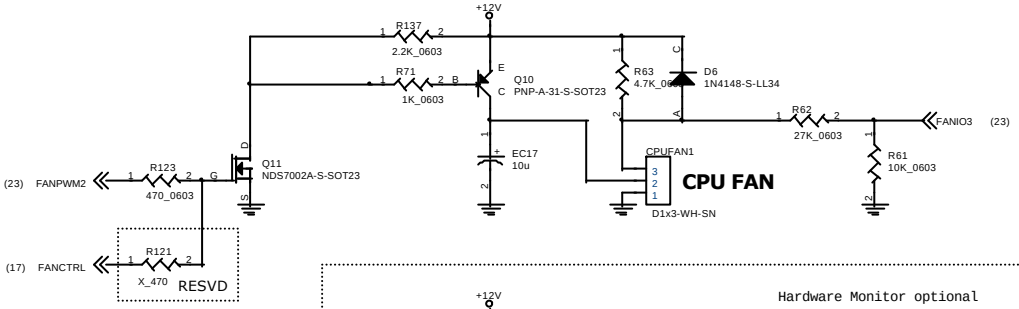

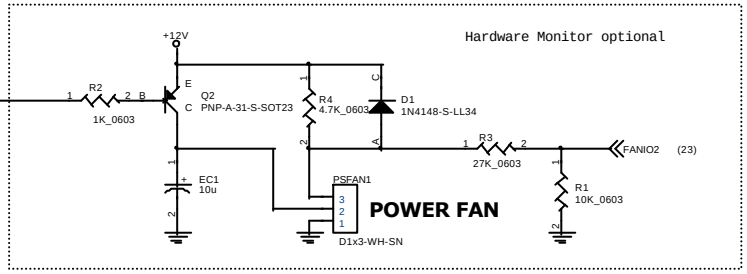

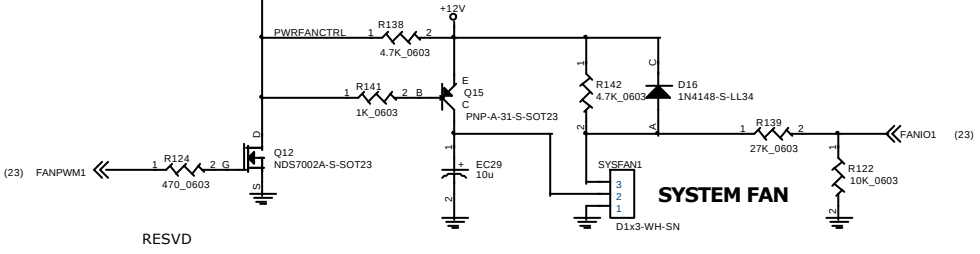

Micro-Star	Title: MS-6315	Rev: 3.0A
Document Number: Hardware Monitor		
Last Revision Date: Monday, February 05,2001	Sheet 24 of 37	

Parallel Port / COM1port & COM2 Header

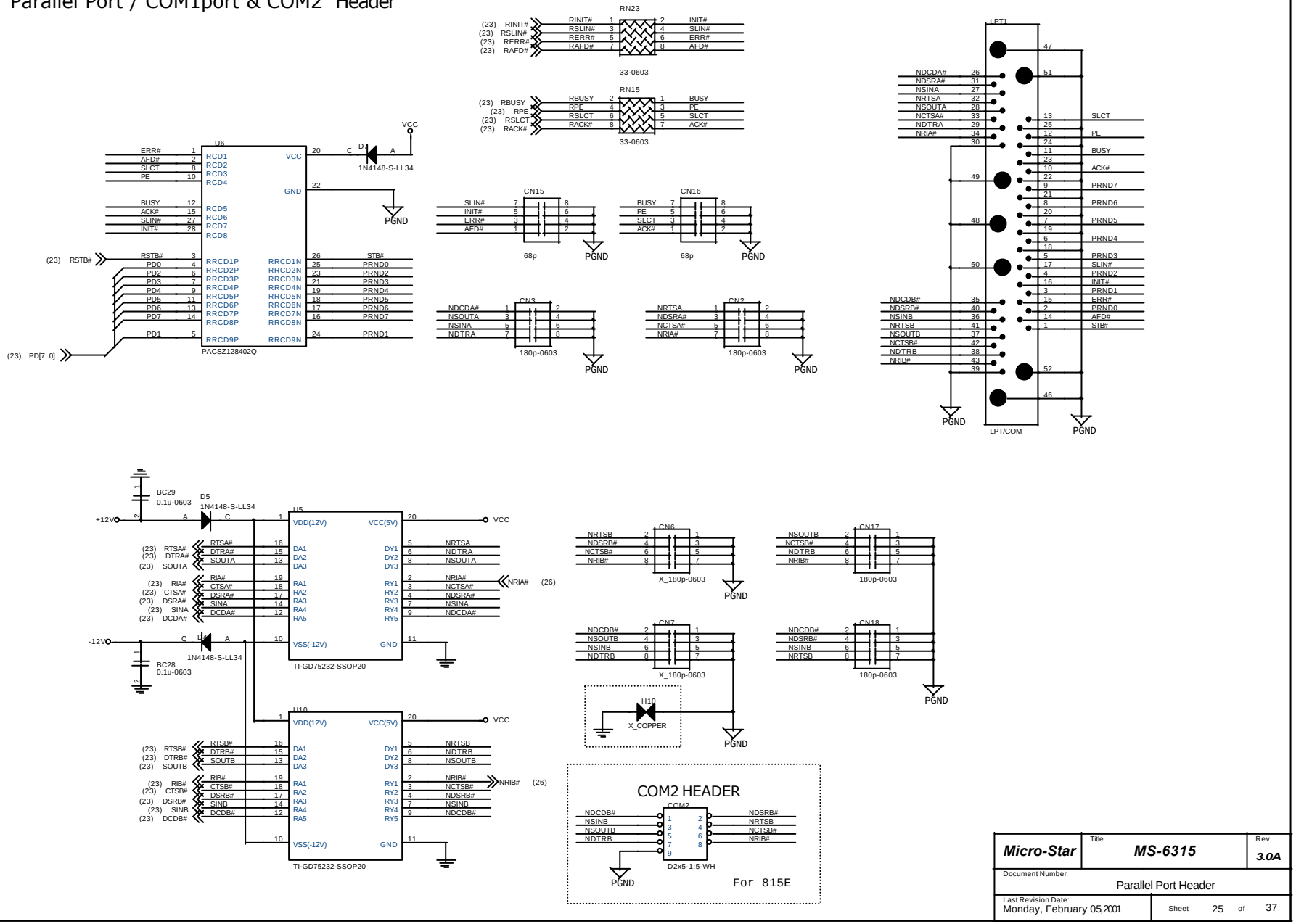

Micro-Star	Title: MS-6315	Rev: 3.0A
Document Number: Parallel Port Header		
Last Revision Date: Monday, February 05,2001	Sheet 25 of 37	

KEYBOARD/MOUSE PORTS

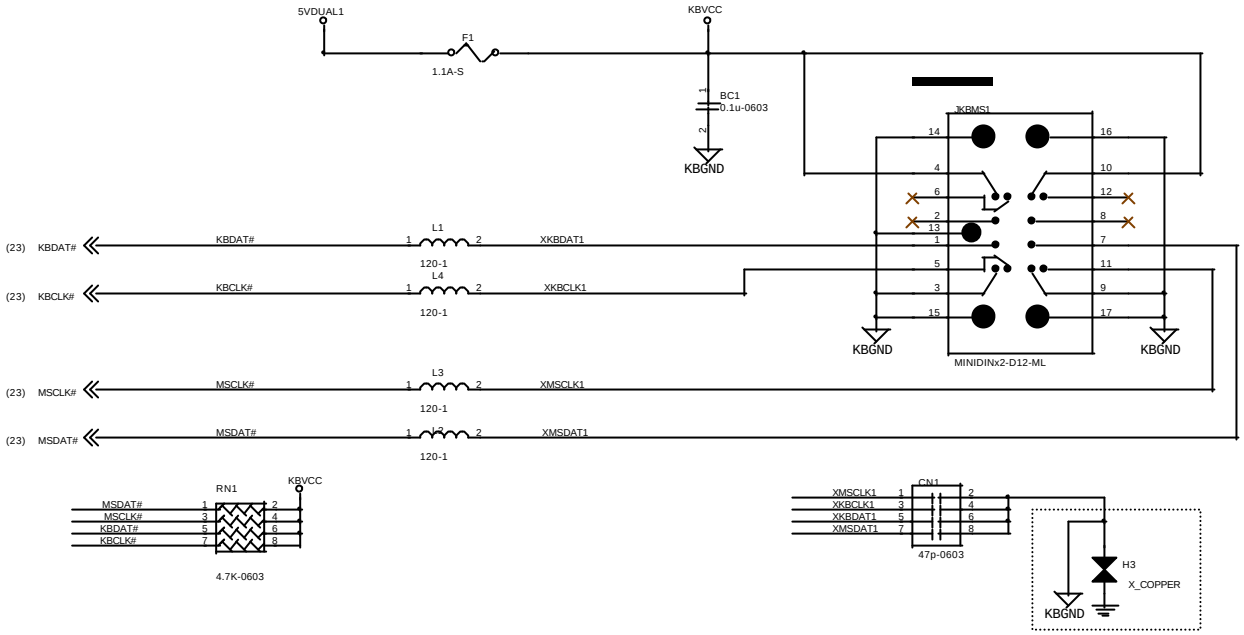

LAN WAKEUP HEADER

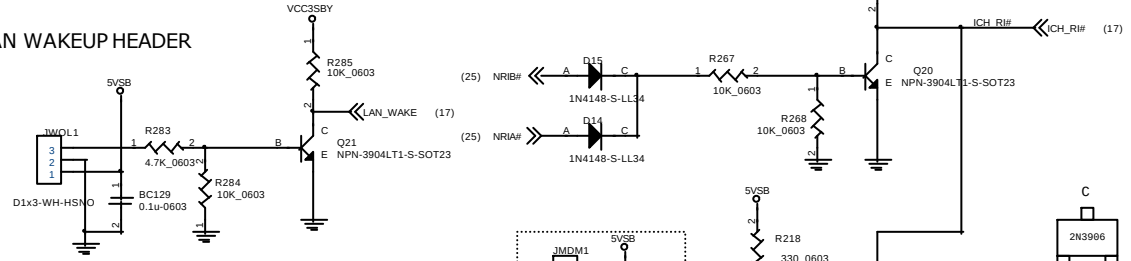

INTERNAL MODEM WAKEUP HEADER

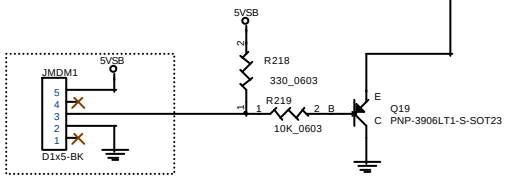

Micro-Star	Title: MS6315	Rev: 3.0A
Document Number: Keyboard board / Mouse port		
Last Revision Date: Monday, February 05,2001	Sheet 26 of 37	

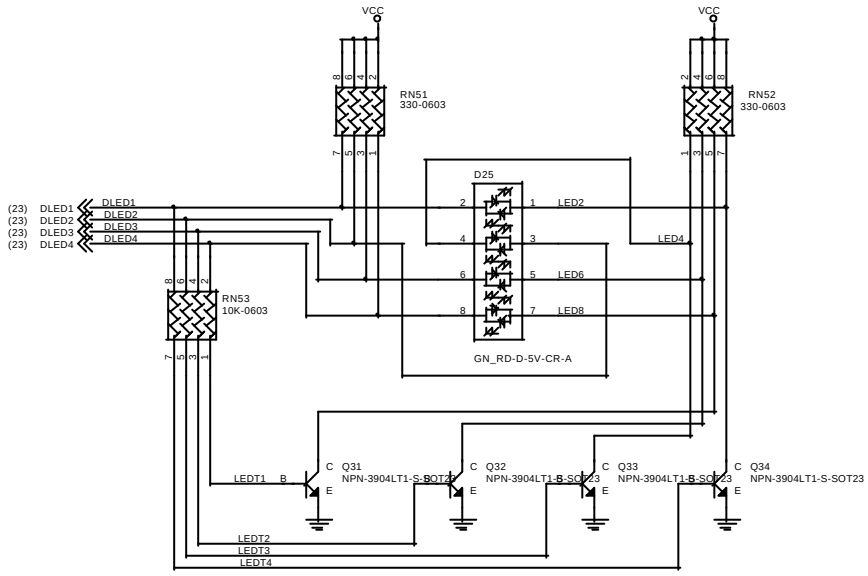

Micro-Star	Title: MS6315	Rev: 3.0A
Document Number: PCI Hardware Audio		
Last Revision Date: Monday, February 05,2001	Sheet 27 of 37	

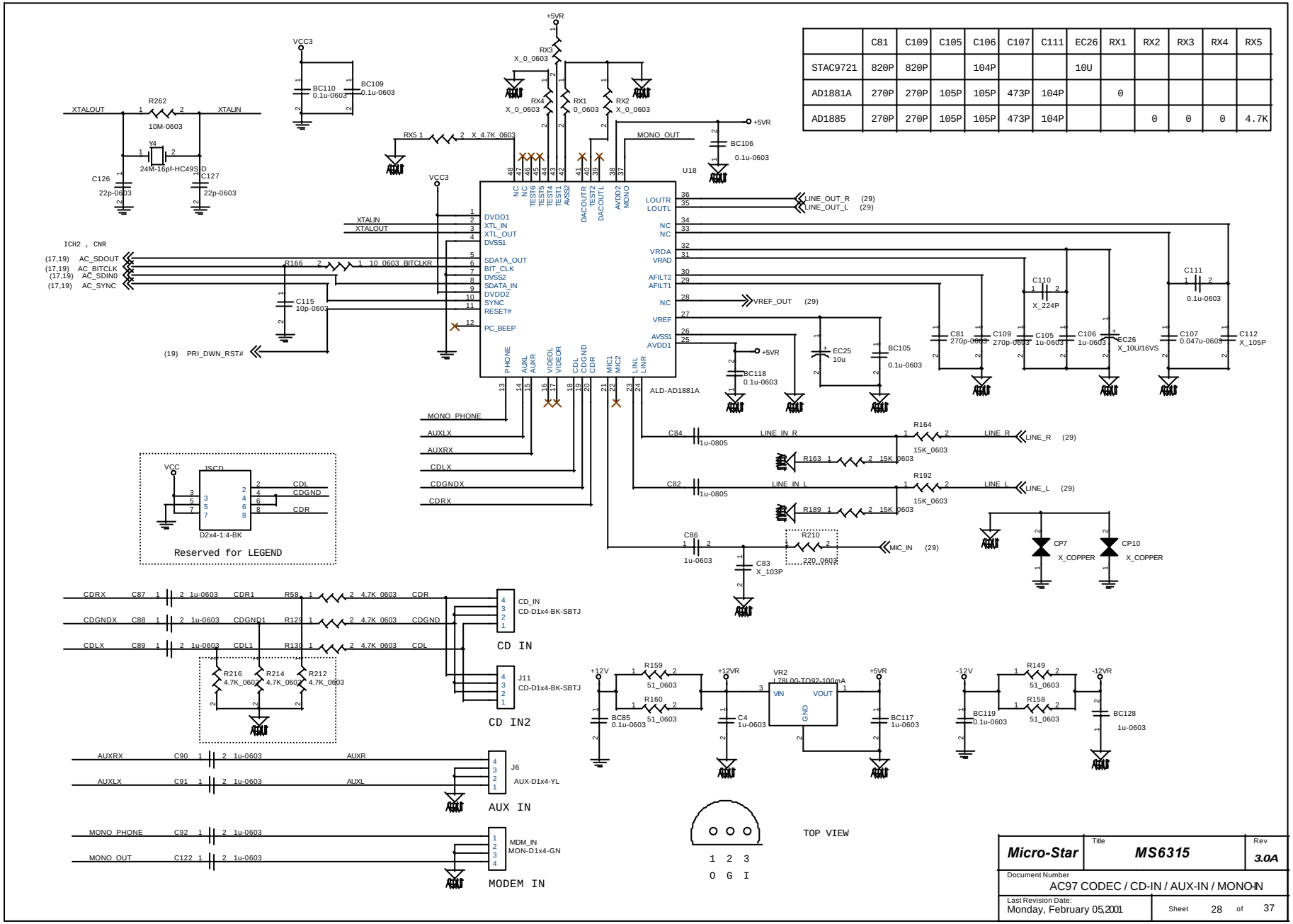

	C81	C109	C105	C106	C107	C111	EC26	RX1	RX2	RX3	RX4	RX5
STAC9721	820P	820P		104P			10U					
AD1881A	270P	270P	105P	105P	473P	104P		0				
AD1885	270P	270P	105P	105P	473P	104P			0	0	0	4.7K

Micro-Star	Title: MS6315		Rev: 3.0A
Document Number: AC97 CODEC / CD-IN / AUX-IN / MONO-IN			
Last Revision Date: Monday, February 05,2001		Sheet 28 of 37	

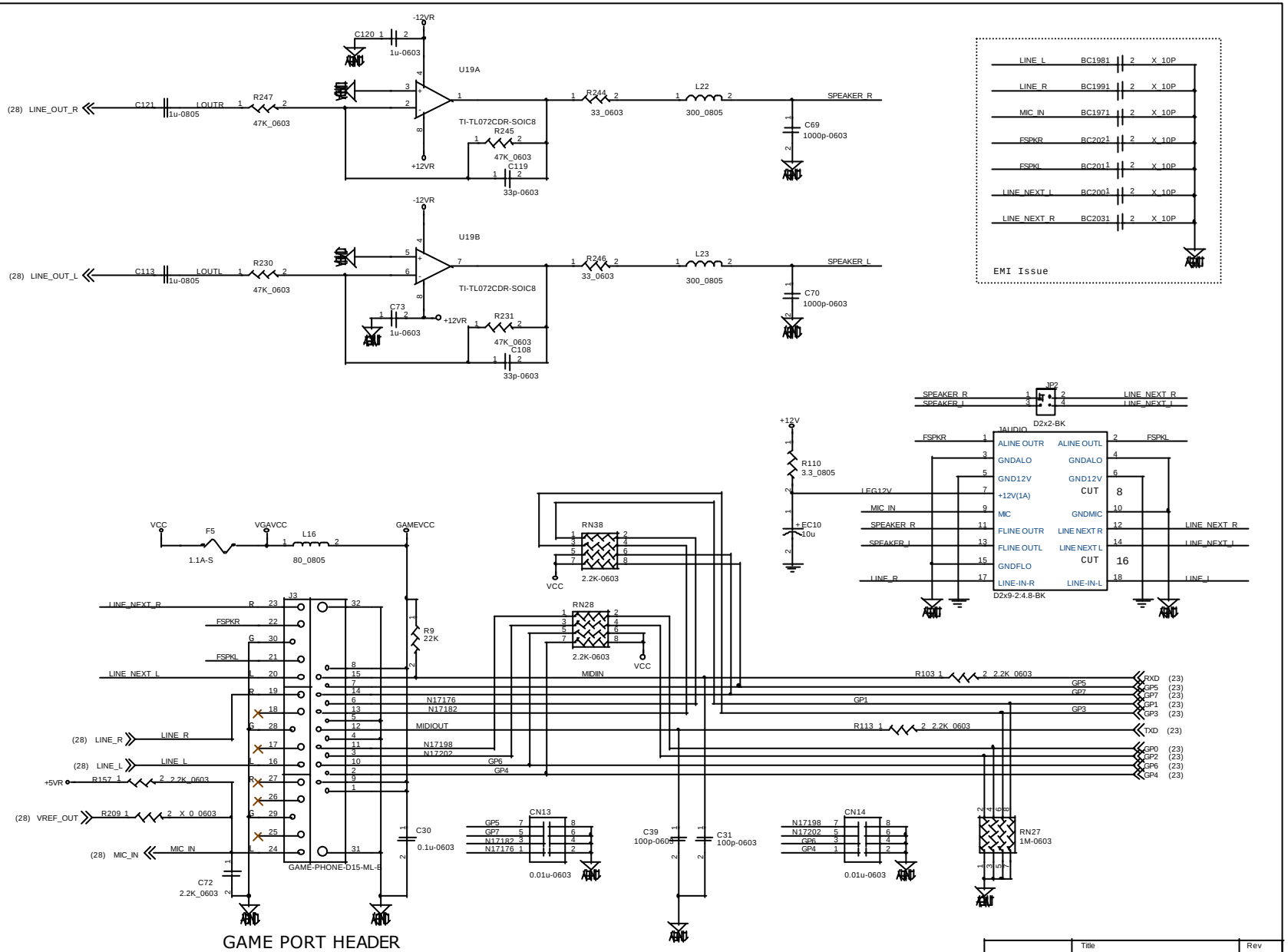

GAME PORT HEADER

Micro-Star	Title: MS6315		Rev: 3.0A
Document Number: Audio Amplifier & Game port Connector			
Last Revision Date: Monday, February 05, 2001		Sheet 29 of 37	

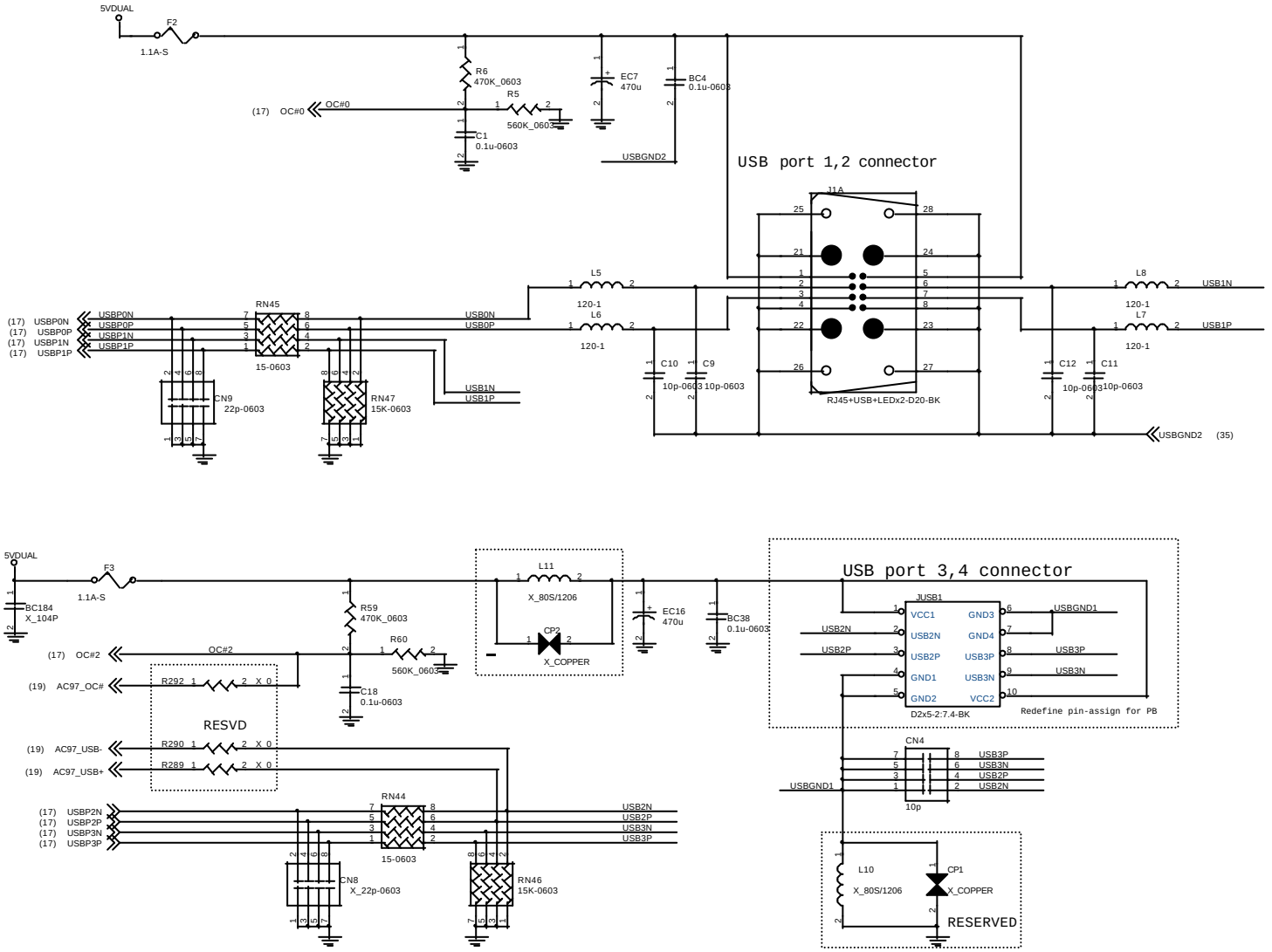

Micro-Star	Title: MS6315	Rev: 3.0A
Document Number: USB Connector		
Last Revision Date: Monday, February 05,2001	Sheet 30 of 37	

VRM 8.4

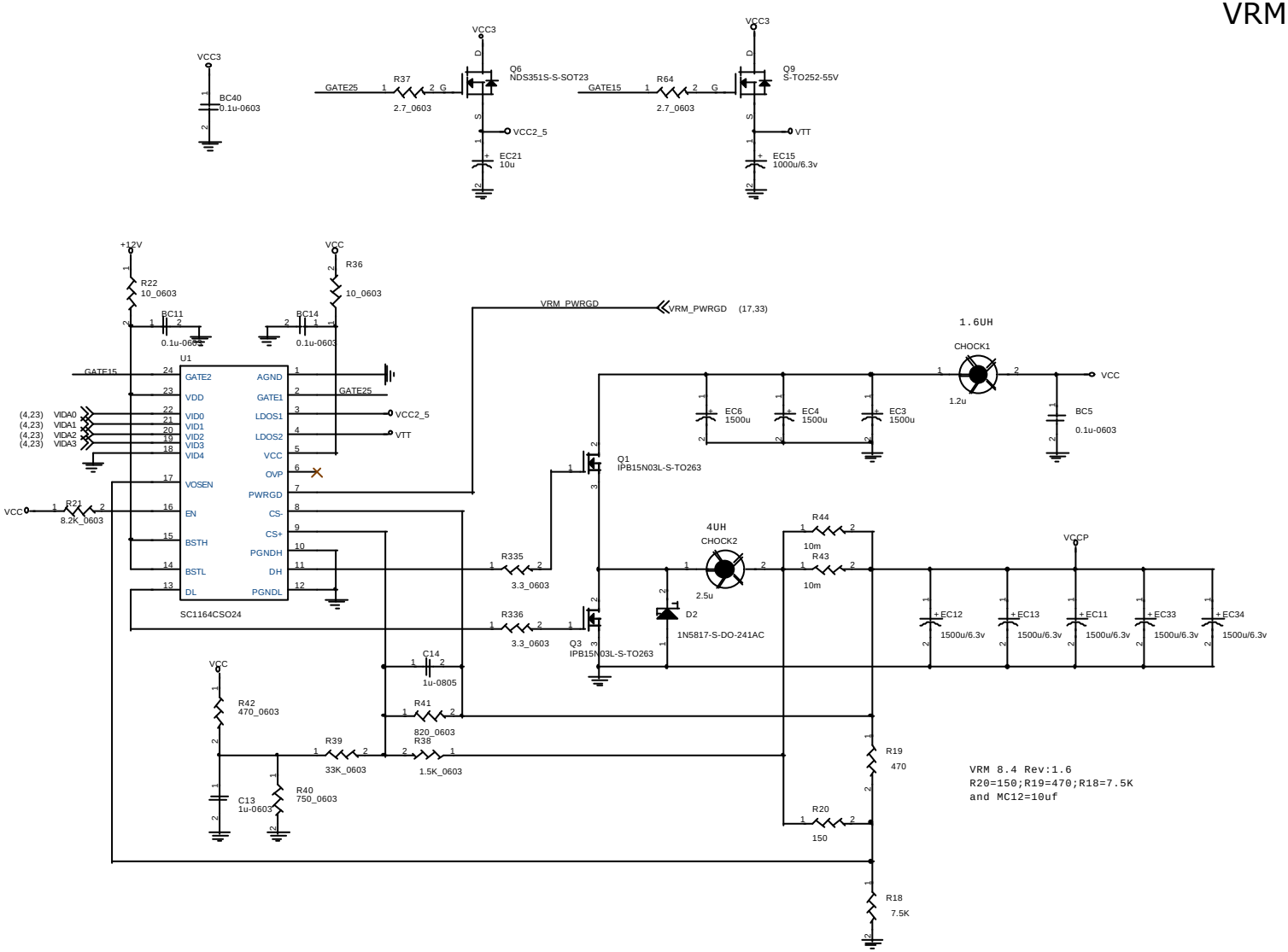

Micro-Star	Title: MS6315	Rev: 3.0A
Document Number: VRM 8.4 (SC1164) / VCCP , VCC2_5 , VTT		
Last Revision Date: Monday, February 19, 2001	Sheet 31 of 37	

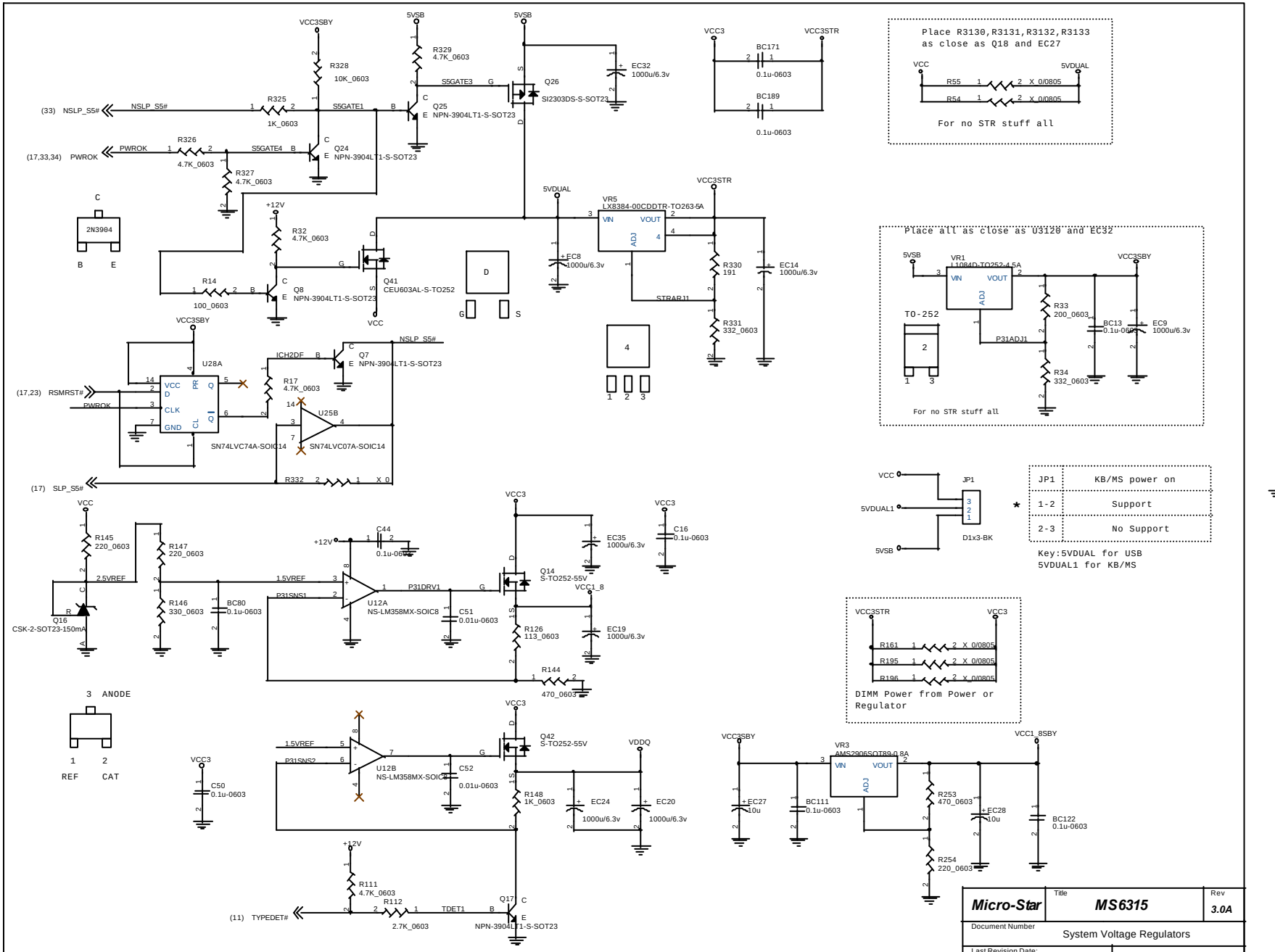
VCC3SBY
5VSB
R328
10K_0603
R329
4.7K_0603
EC32
1000u/6.3v
Q26
SI2303DS-S-SOT23
S5GATE3
(33) NSLP_S5#
R325
1K_0603
S5GATE1
Q25
NPN-3904LT1-S-SOT23
(17,33,34) PWROK
R326
4.7K_0603
S5GATE4
Q24
NPN-3904LT1-S-SOT23
R327
4.7K_0603
2N3904
+12V
R32
4.7K_0603
Q41
CEU603AL-S-TO252
R14
100_0603
Q8
NPN-3904LT1-S-SOT23
VCC
5VDUAL
VR5
LX8384-00CDDTR-TO263-5A
VIN
VOUT
ADJ
VCC3STR
EC8
1000u/6.3v
R330
191
EC14
1000u/6.3v
STRAP1J1
R331
332_0603
U28A
SN74LVC74A-SOIC14
(17,23) RSMRST#
PWROK
ICH2DF
Q7
NPN-3904LT1-S-SOT23
NSLP_S5#
R17
4.7K_0603
U25B
SN74LVC07A-SOIC14
R332
(17) SLP_S5#
VCC3
BC171
0.1u-0603
BC189
0.1u-0603
Place R3130,R3131,R3132,R3133
as close as Q18 and EC27
R55
R54
X_0/0805
For no STR stuff all
Place all as close as U3120 and EC32
VR1
L1084D-TO252-4.5A
TO-252
R33
200_0603
P31ADJ1
R34
332_0603
BC13
0.1u-0603
EC9
1000u/6.3v
For no STR stuff all
JP1
D1x3-BK
5VDUAL1
JP1 | KB/MS power on
1-2 | Support
2-3 | No Support
Key:5VDUAL for USB
5VDUAL1 for KB/MS
R145
220_0603
R147
220_0603
2.5VREF
R146
330_0603
BC80
0.1u-0603
Q16
CSK-2-SOT23-150mA
C44
0.1u-0603
1.5VREF
P31SNS1
U12A
NS-LM358MX-SOIC8
P31DRV1
Q14
S-TO252-55V
VCC1_8
C51
0.01u-0603
R126
113_0603
EC35
1000u/6.3v
C16
0.1u-0603
EC19
1000u/6.3v
R144
470_0603
3 ANODE
1 2
REF CAT
C50
0.1u-0603
U12B
NS-LM358MX-SOIC8
P31SNS2
Q42
S-TO252-55V
VDDQ
C52
0.01u-0603
R148
1K_0603
EC24
1000u/6.3v
EC20
1000u/6.3v
R111
4.7K_0603
R112
2.7K_0603
TDET1
(11) TYPEDET#
Q17
NPN-3904LT1-S-SOT23
VCC3STR
VCC3
R161
R195
R196
DIMM Power from Power or
Regulator
VR3
AMS2906SOT89-0.8A
EC27
10u
BC111
0.1u-0603
R253
470_0603
EC28
10u
BC122
0.1u-0603
R254
220_0603
VCC1_8SBY
Micro-Star
Title
MS6315
Rev
3.0A
Document Number
System Voltage Regulators
Last Revision Date:
Monday, February 05, 2001
Sheet 32 of 37

Front Panel & Power Connector

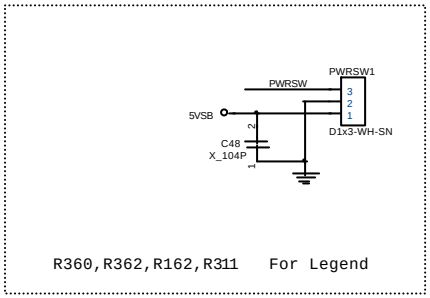

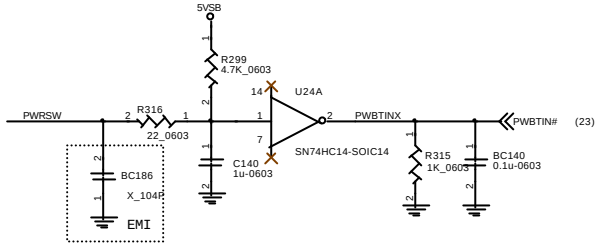

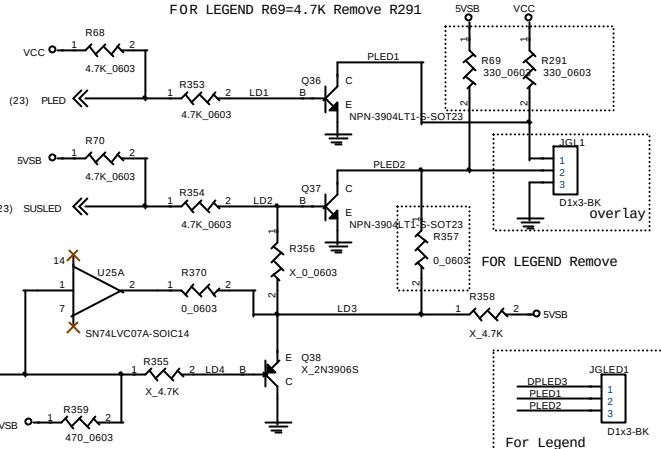

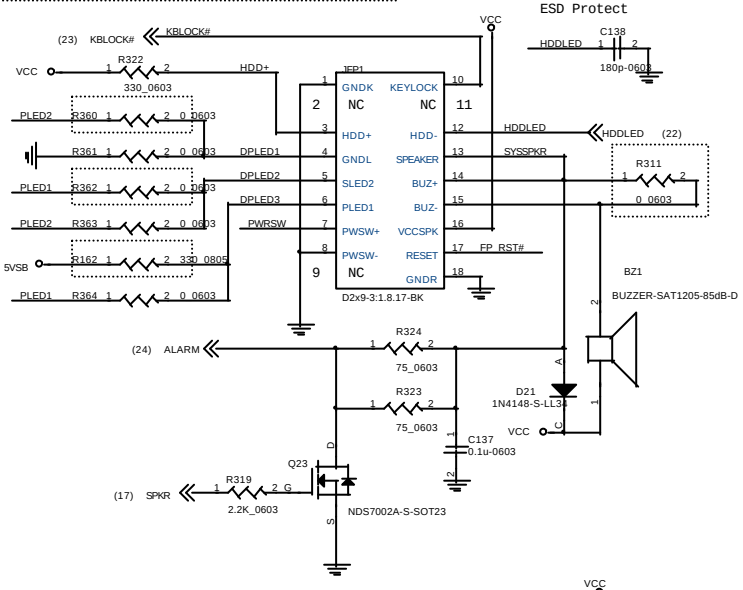

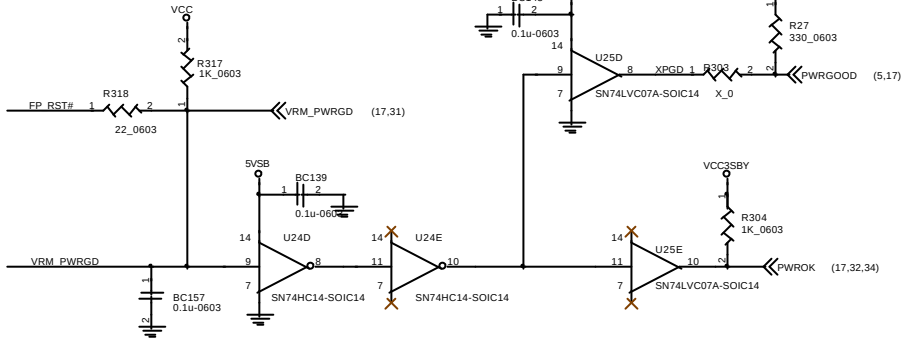

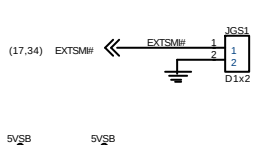

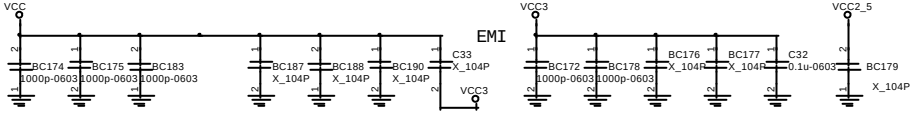

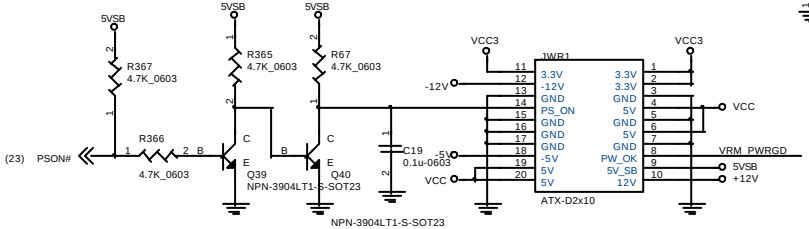

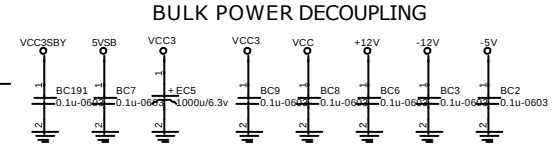

Micro-Star	Title: MS6315	Rev: 3.0A
Document Number: Front Panel and ATX power Connector		
Last Revision Date: Monday, February 05,2001	Sheet 33 of 37	

PULL-UP RESISTORS

PCI BUS

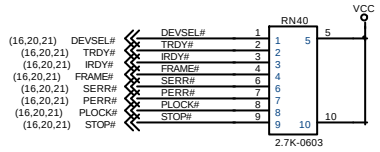

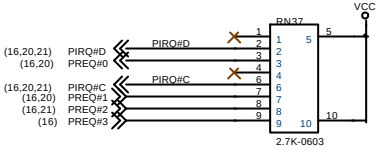

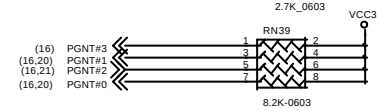

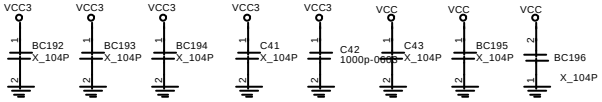

ICH

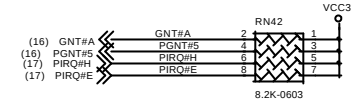

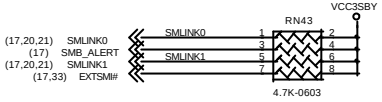

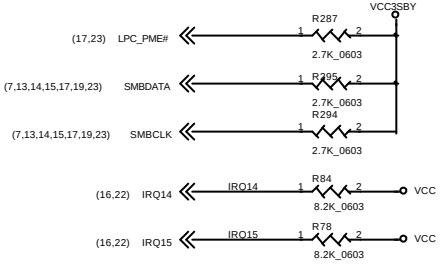

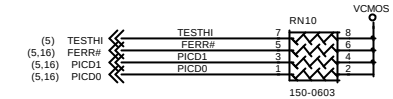

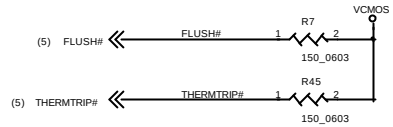

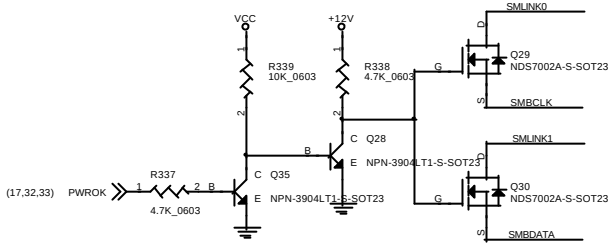

Micro-Star	Title: MS6315	Rev: 3.0A
Document Number: Pull-Up Resistors		
Last Revision Date: Wednesday, February 07,2001	Sheet 34 of 37	

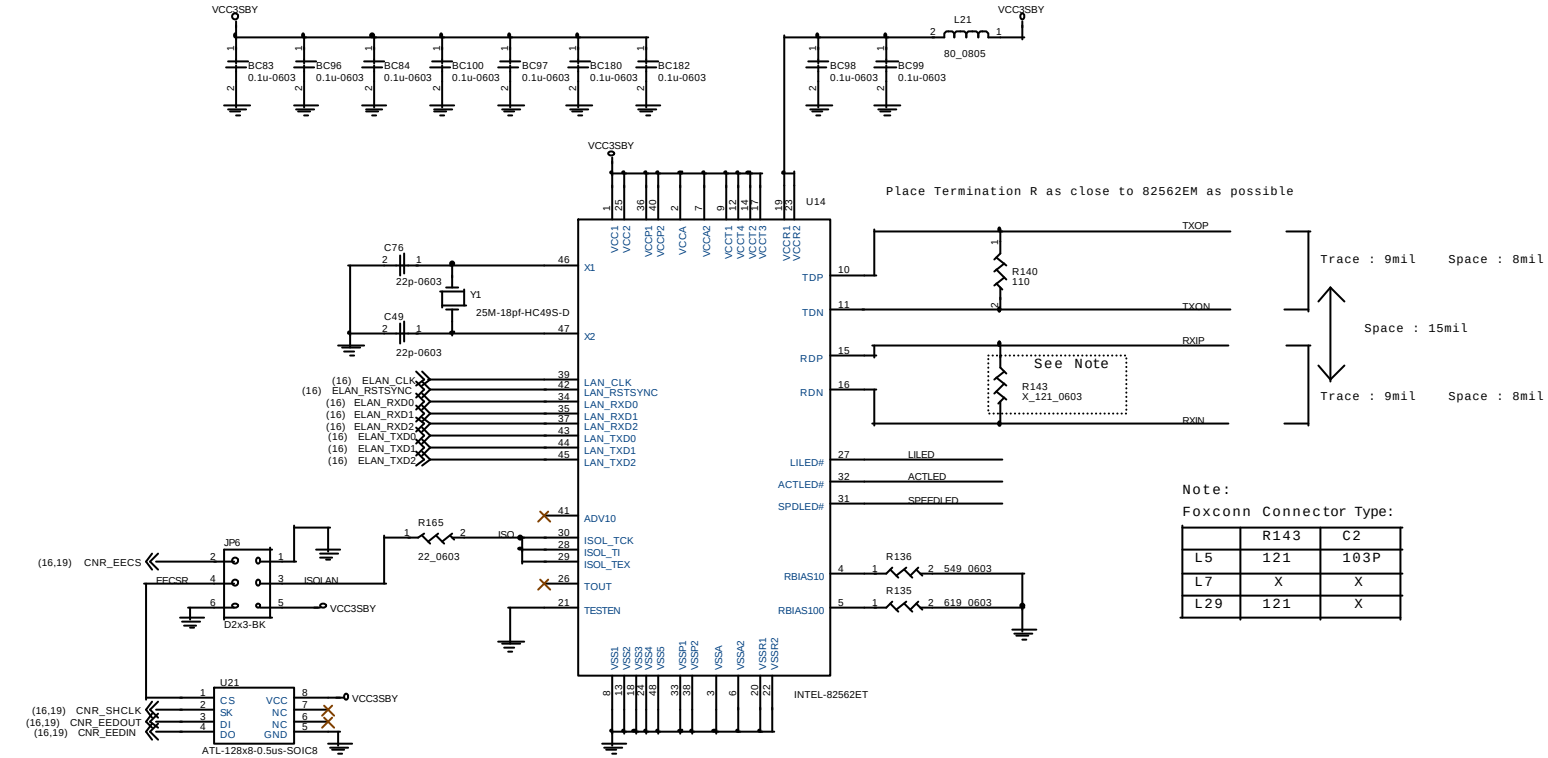

Note:
Foxconn Connector Type:

	R143	C2
L5	121	103P
L7	X	X
L29	121	X

Remark:
82562EM with 93C66:M33-26N0103-A26
82562ET with 93C46:M33-15O0203-A26

*

JP6	On board LAN
1-3,2-4	Enable
3-5,4-6	Disable

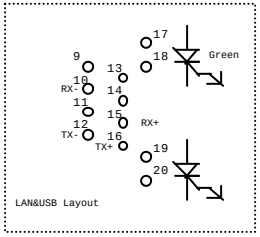

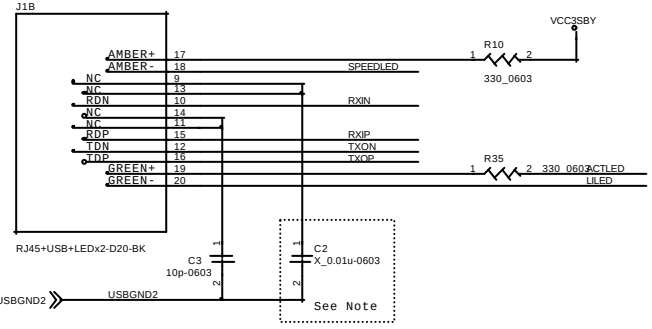

Micro-Star	Title: MS6315		Rev: 3.0A
Document Number: LAN Connector & I562ET/M (Kinnereth / +)			
Last Revision Date: Monday, February 05, 2001		Sheet 35 of 37	

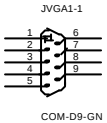

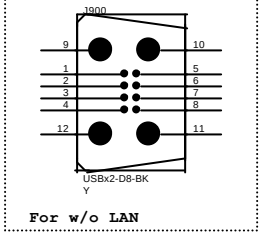

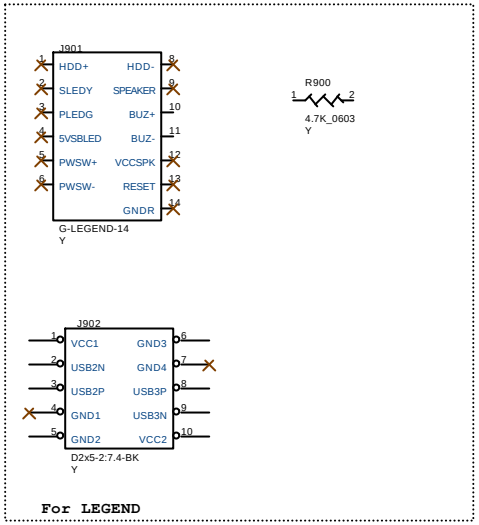

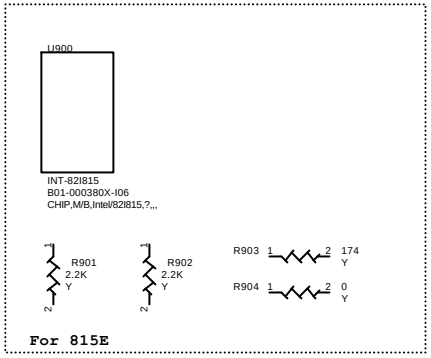

Micro-Star	Title: MS6315	Rev: 3.0A
Document Number: OPTION PARTS		
Last Revision Date: Tuesday, February 06,2001	Sheet 36 of 37	

JP1(1-2)

JC-D2-WH

JP7(1-2)

JC-D2-RD

JFP1(R)

JC-D2-GN
14-15

JP3(1)

JC-D2-GN

JP4(1-2)

JC-D2-GN

JP5(1-2)

JC-D2-GN

JBAT1(1-2)

JC-D2-RD

JP2(WW)

JC-D2x2-GN
1-2/3-4

JP6(XX)

JC-D2x2-GN
1-3/2-4

COM1

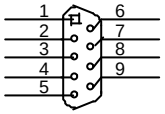

COM-D9-GN

PCB

BAT2-1
BAT-CR2032-3V-210mAh

U26-1

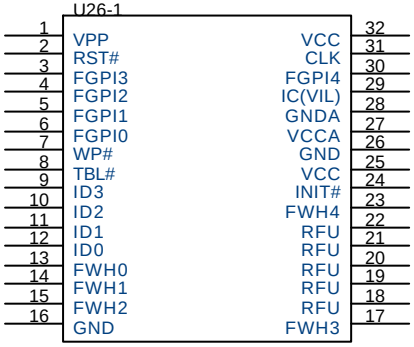

SST-256K*8-33MHz-PLCC32

P01-631530A
PCB, M/B, 6315, 30A, 4

AGP1-1

E91-0000021-H06
Mech,Retention,RetentionModule,83.2mmX18.5mm,LeftLock,ForAGPCard

Micro-Star	Title **MS6315**	Rev **3.0A**
Document Number: MANUAL PARTS		
Last Revision Date: Monday, February 05, 2001	Sheet 37 of 37	

MS-6315 Micro-ATX

Intel PPGA 370 Processor

Intel 815E/815EP Chipset

Winbond 83627HF-AW LPC I/O

ICH2 LAN Controller + Kinnereth / +

Last Schematic Update Date: 04/10/2001

Model option table

Model type	Function	BOM Config	ERP BOM No.
MS6315	Std(wo/lan,D-led)	Cfg6315-30B-STD	
MS6315	Option:G(815E)	Cfg6315-30B-G	
MS6315	Option:L (w/Lan)	Cfg6315-30B-L	50/60 6315-20S

Stantard=Wo/LAN,Wo/D-LED,W/815EP For MSI

Model type	Function	BOM Config	ERP BOM No.
MS6315L2	Option:L (w/lan,D-led)	Cfg6315L2-30B-L	50/60 6315-130

Stantard=Wo/LAN,Wo/D-LED,W/815EP For Legend

Model type	Function	BOM Config	ERP BOM No.
MS6315	Option:I(w/lan,815E)	Cfg6315-30B-I	50/60 6315-140

Stantard=W/LAN,815E,ST9721,Wo/D-LED For Ipex

Title	Page
Cover Sheet	1
Block Diagram	2
GPIO SPEC	3
370PGA Socket	4,5
GTL Termination	6
Clock Synthesizer	7
GMCH	8,9,10
AGP / AIMM Display Cache	11
Graphics Connectors	12
System Memory	13,14,15
ICH	16,17
FWH	18
CNR Riser	19
PCI Connectors	20,21
ATA66 Connectors	22
LPC I/O	23
Hardware monitor	24
Parallel / Serial Port	25
Keyboard/Mouse Connectors	26
PCI Audio Controllor	27
AC'97 Codec	28
Audio/Game Port	29
USB HUB & USB Connectors	30
VRM 8.4	31
Voltage Regulators	32
Front Panel	33
Pull-up Resistors	34
LAN	35
Option & Manul parts	36,37

Block Diagram

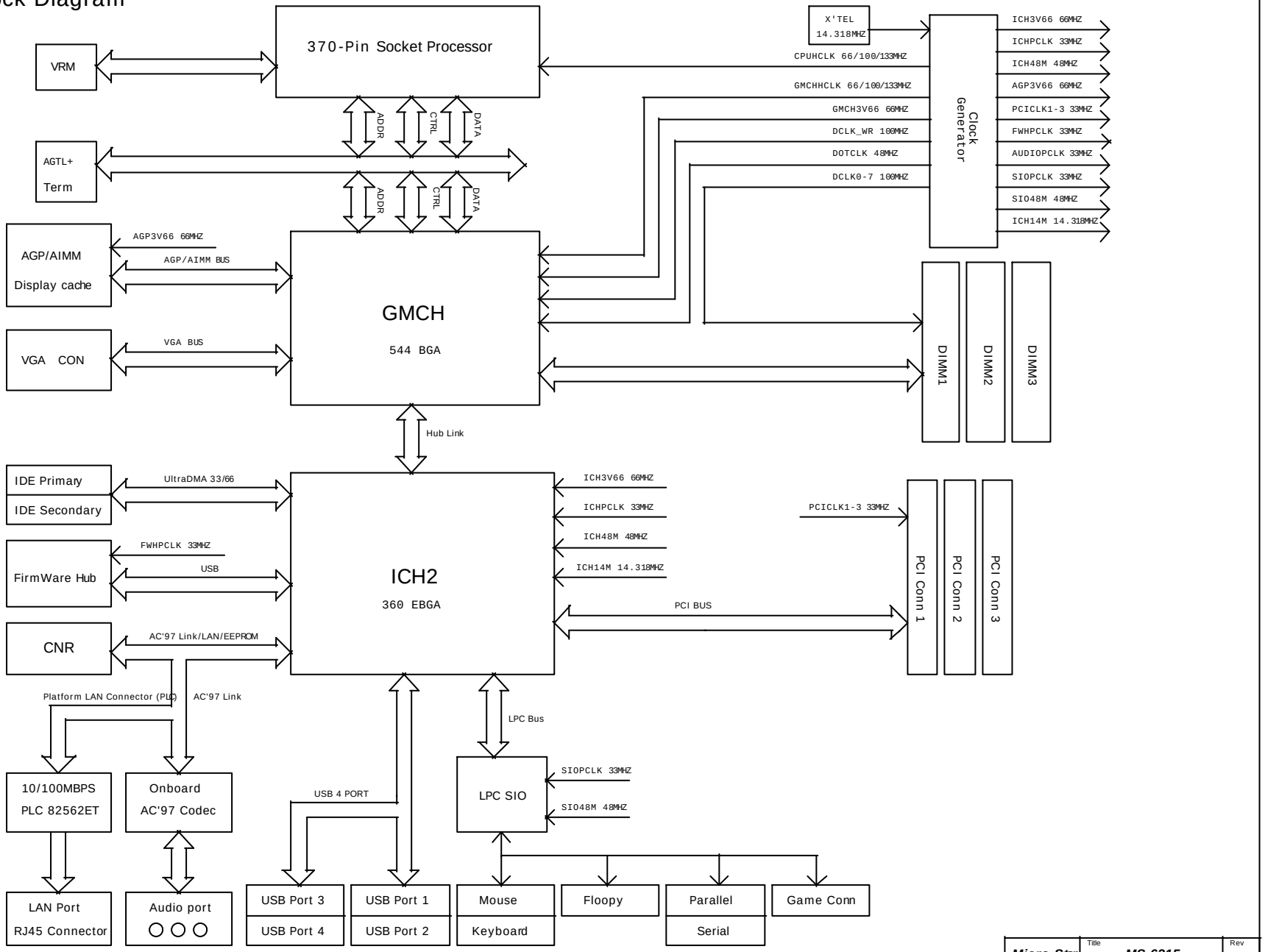

Micro-Star	Title: MS-6315	Rev: 3.0B
Document Number: Block Diagram		
Last Revision Date: Friday, February 16, 2001	Sheet 2 of 37	

General Purpose I/O Spec.

ICH

GPIO Pin	Type	Function
GPIO 0	I	Pull up (REQ#A)
GPIO 1	I	PREQ#5
GPIO 2~4	I	NC
GPIO 5	I	NC
GPIO 6	I	NC
GPIO 7	I	NC
GPIO 8	I	LAN Wake Up
GPIO 9	I	Not Implemented
GPIO 10	I	Not Implemented
GPIO 11	I	SMB_ALERT
GPIO 12	I	External SMI
GPIO 13	I	LPC PME
GPIO 14~15	I	Not Implemented
GPIO 16	O	Pull up(GNT#A)
GPIO 17	O	PGNT#5
GPIO 18~20	O	NC
GPIO 21	O	FAN Ctrl
GPIO 22	O	Pull up
GPIO 23	OD	BIOS update lock(H)/unlock(L)
GPIO 24	O	NC
GPIO 25	O	NC
GPIO 26	O	Not Implemented
GPIO 27	I/O	NC
GPIO 28	I/O	NC
GPIO 29~31	I/O	Not Implemented

PCI Config.

DEVICE	ICH INT Pin	IDSEL
PCI Slot 1	INTA# INTB# INTC# INTD#	AD16
PCI Slot 2	INTB# INTC# INTD# INTA#	AD17
PCI Slot 3	INTC# INTD# INTA# INTB#	AD18

FWH

GPIO Pin	Type	Function
GPI 0	I	ATA IDE 1 Detect
GPI 1	I	ATA IDE 2 Detect
GPI 2	I	GPI2=L GPI3=H Flash from FDD
GPI 3	I	GPI2=H GPI3=L Boot Auto clear CMOS

ICH2 SMLINK0,1 Connect to PCI2 for PCI card AOL

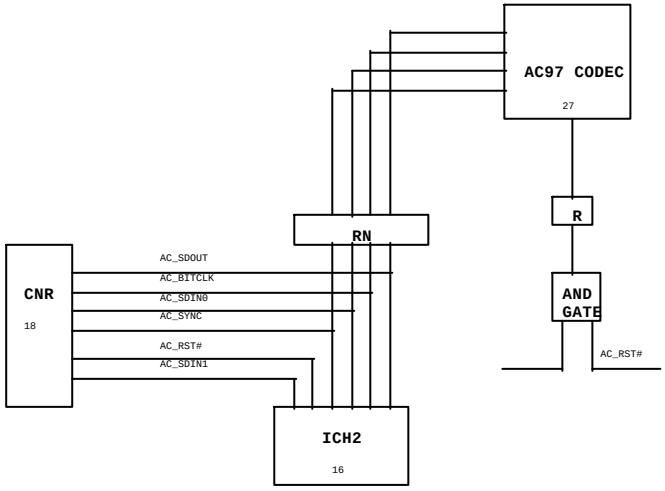

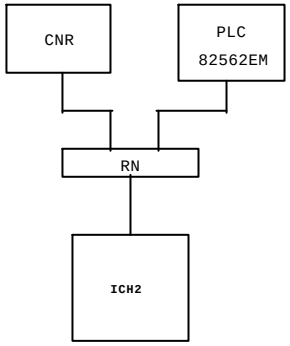

370PGA Socket Part 1

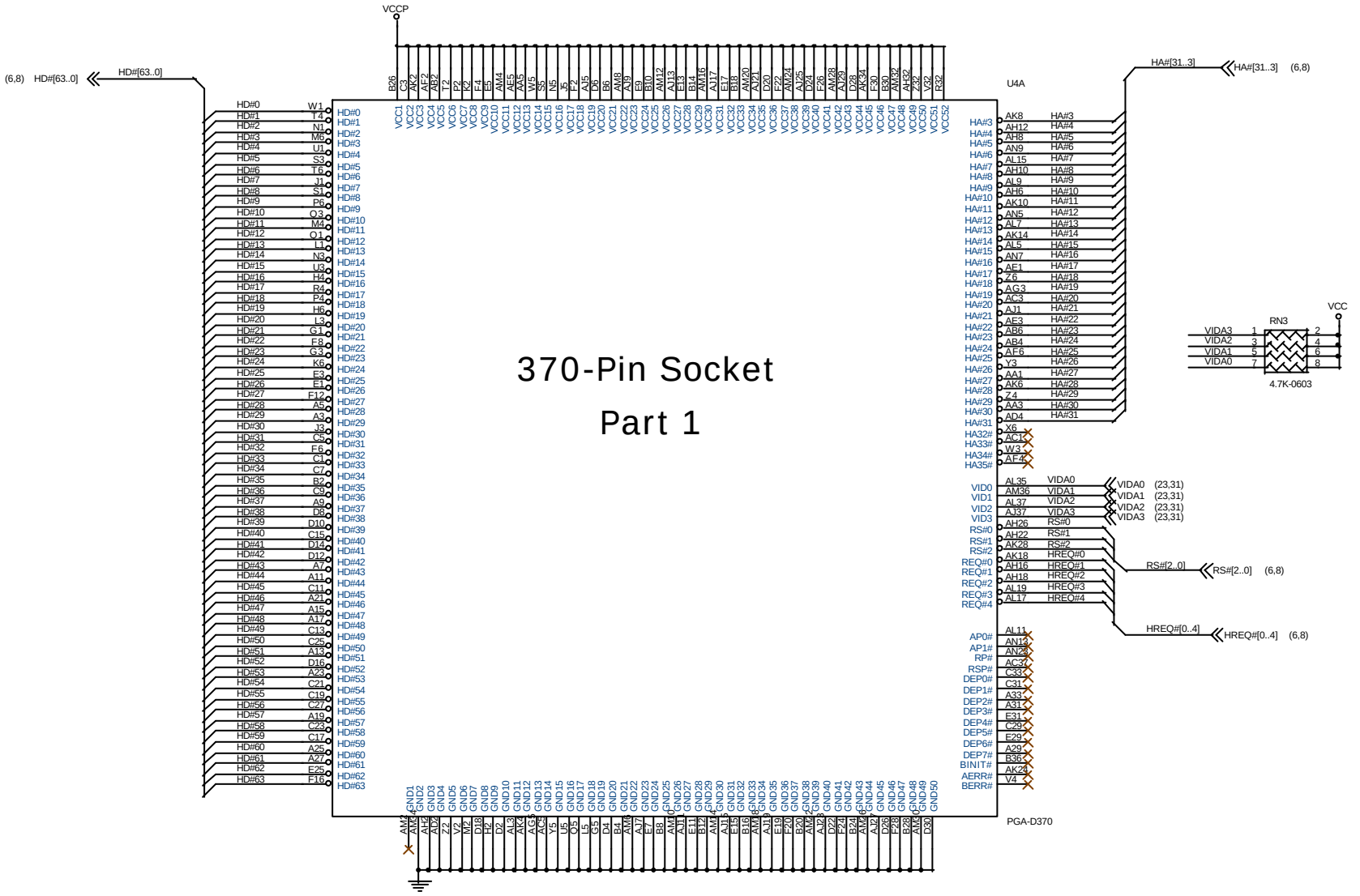

Micro-Star	Title: MS-6315		Rev: 3.0B
Document Number: SOCKET 370 PGA-1			
Last Revision Date: Monday, May 07, 2001	Sheet 4 of 37		

370PGA Socket Part 2

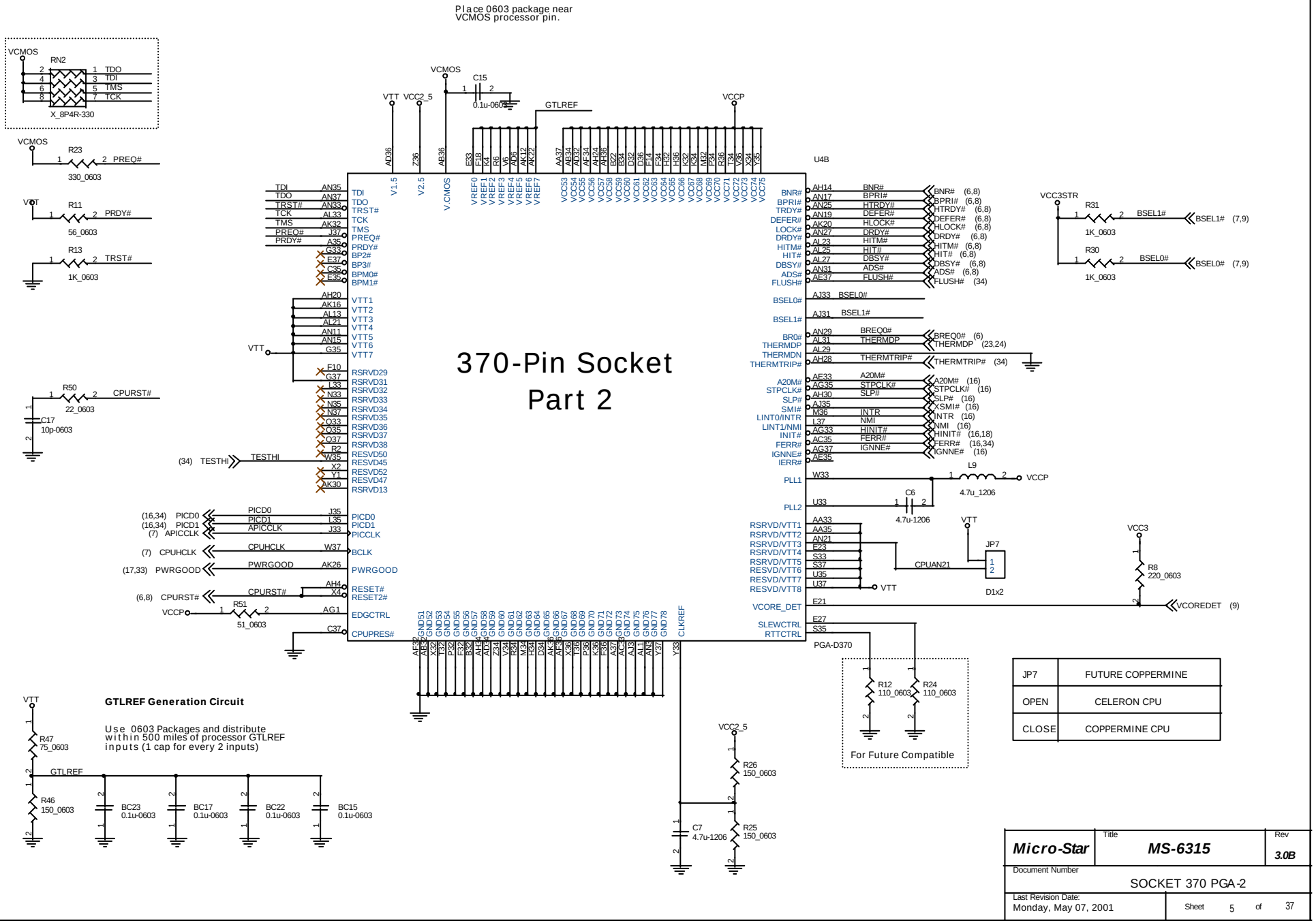

GTL Termination

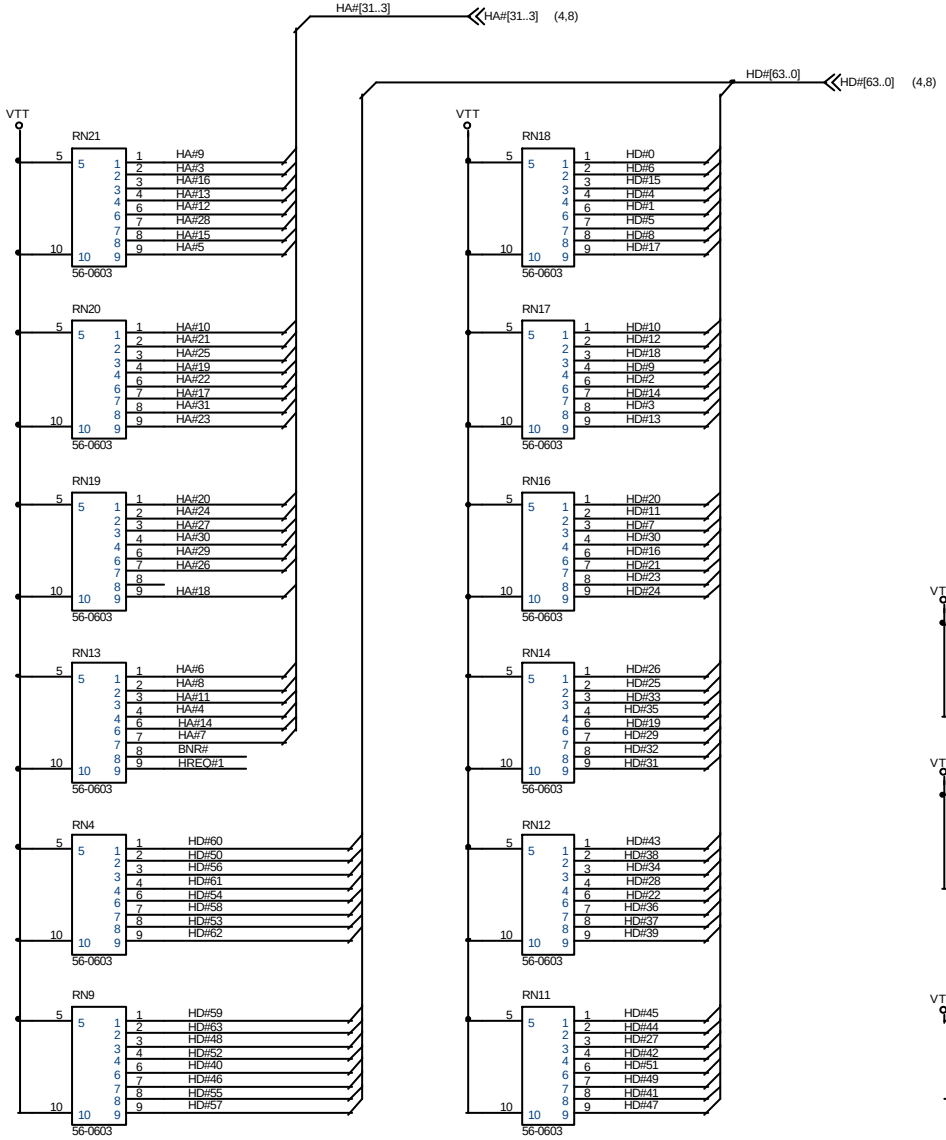

GTL VTT Bypass Capacitor

Every two R-packs add one 0.1U Cap.

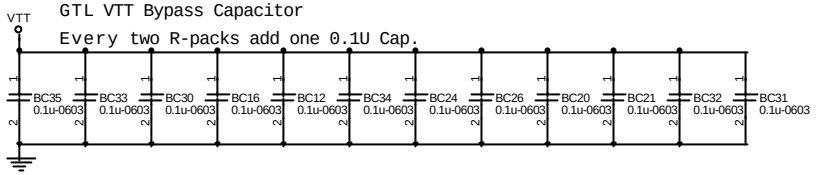

CPU VCORE Bypass Capacitor put in CPU socket

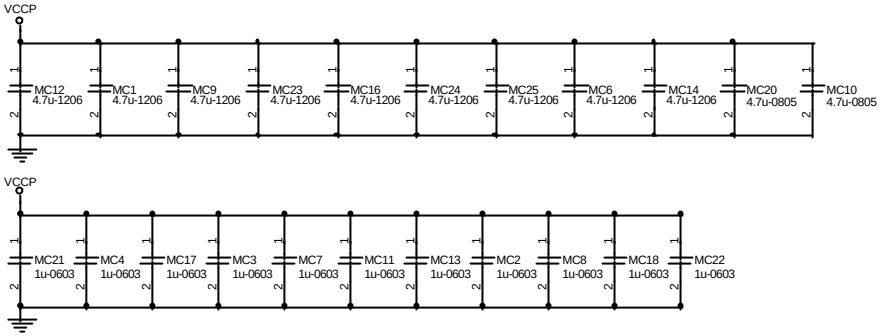

For VCCP

11 PCS 105P Cap. Placement

9 PCS 4.7U/0805 Cap. Placement

1 PCS 10U/1206 Cap. Placement

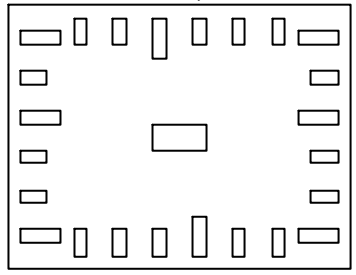

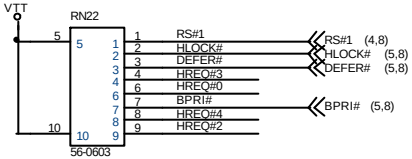

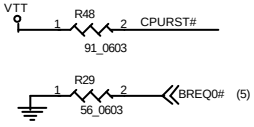

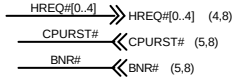

Micro-Star	Title: MS-6315	Rev: 3.0B
Document Number: GTL Termination		
Last Revision Date: Monday, May 07, 2001	Sheet 6 of 37	

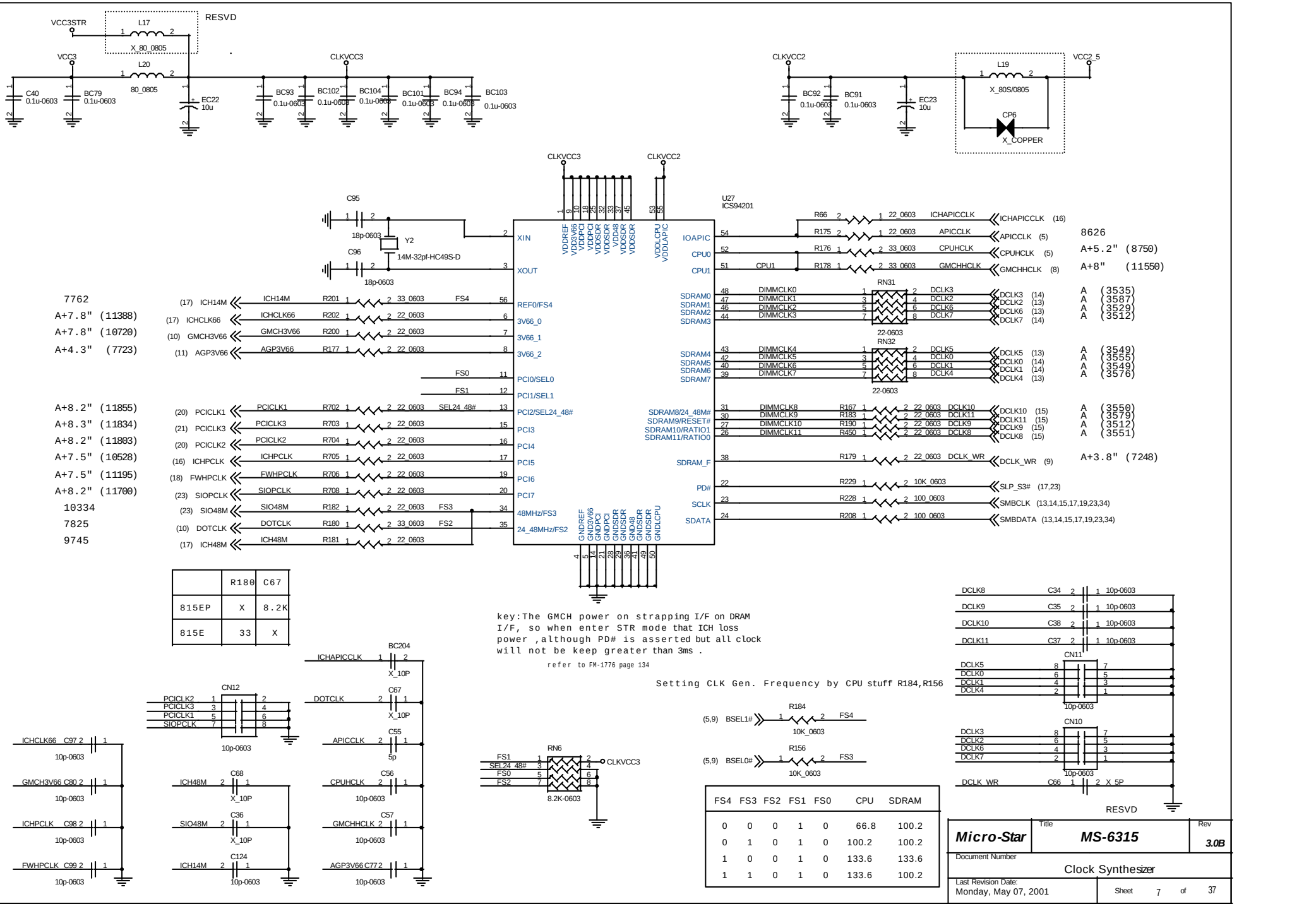

	R180	C67
815EP	X	8.2K
815E	33	X

FS4	FS3	FS2	FS1	FS0	CPU	SDRAM
0	0	0	1	0	66.8	100.2
0	1	0	1	0	100.2	100.2
1	0	0	1	0	133.6	133.6
1	1	0	1	0	133.6	100.2

RESVD

Micro-Star	Title: MS-6315	Rev: 3.0B
	Document Number: Clock Synthesizer	
	Last Revision Date: Monday, May 07, 2001	Sheet 7 of 37

82815, PART 1 : HOST INTERFACE

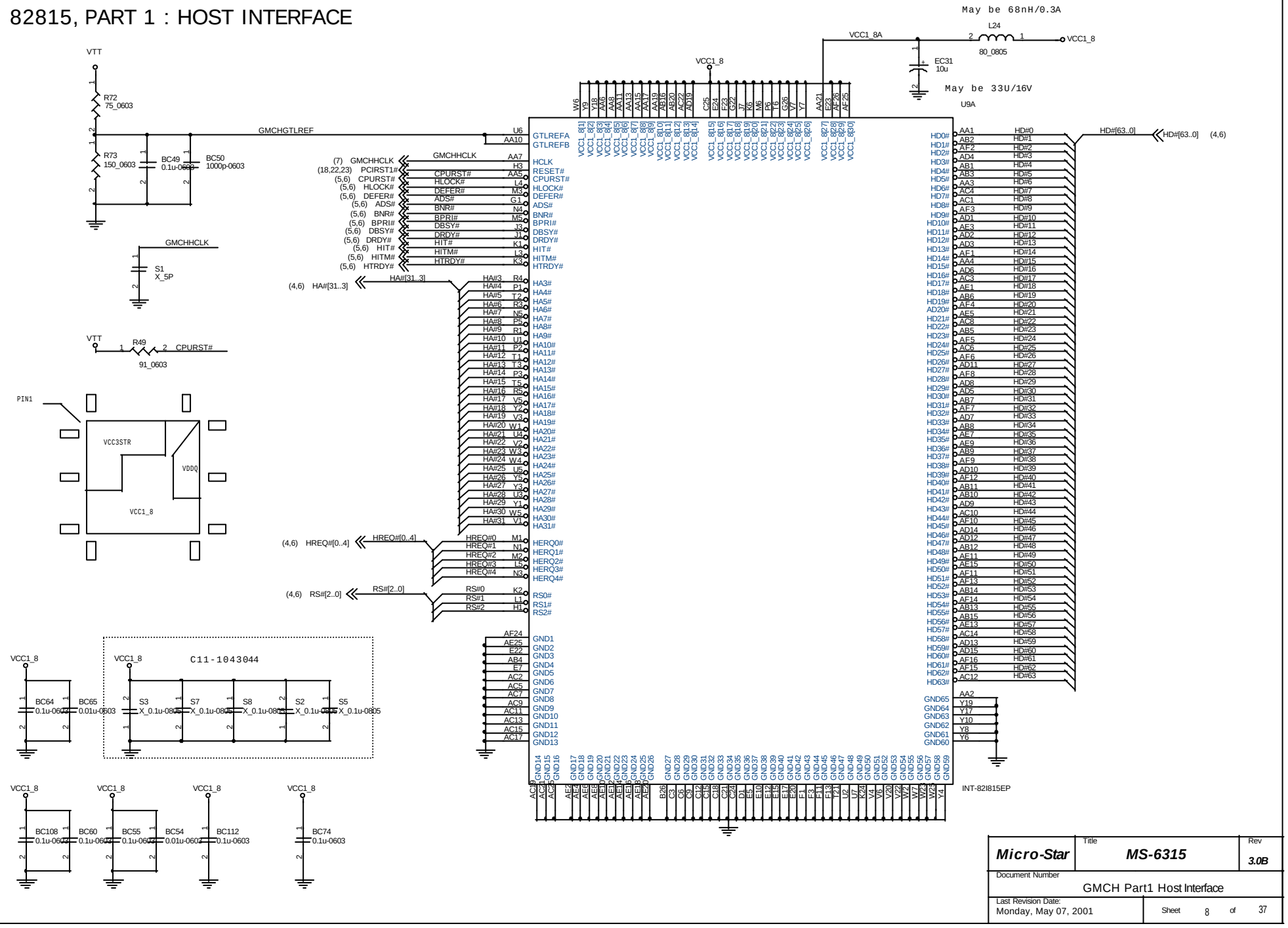

Micro-Star	Title: MS-6315	Rev: 3.0B
Document Number: GMCH Part1 Host Interface		
Last Revision Date: Monday, May 07, 2001	Sheet 8 of 37	

GMCH, PART 2 : SYSTEM MEMORY

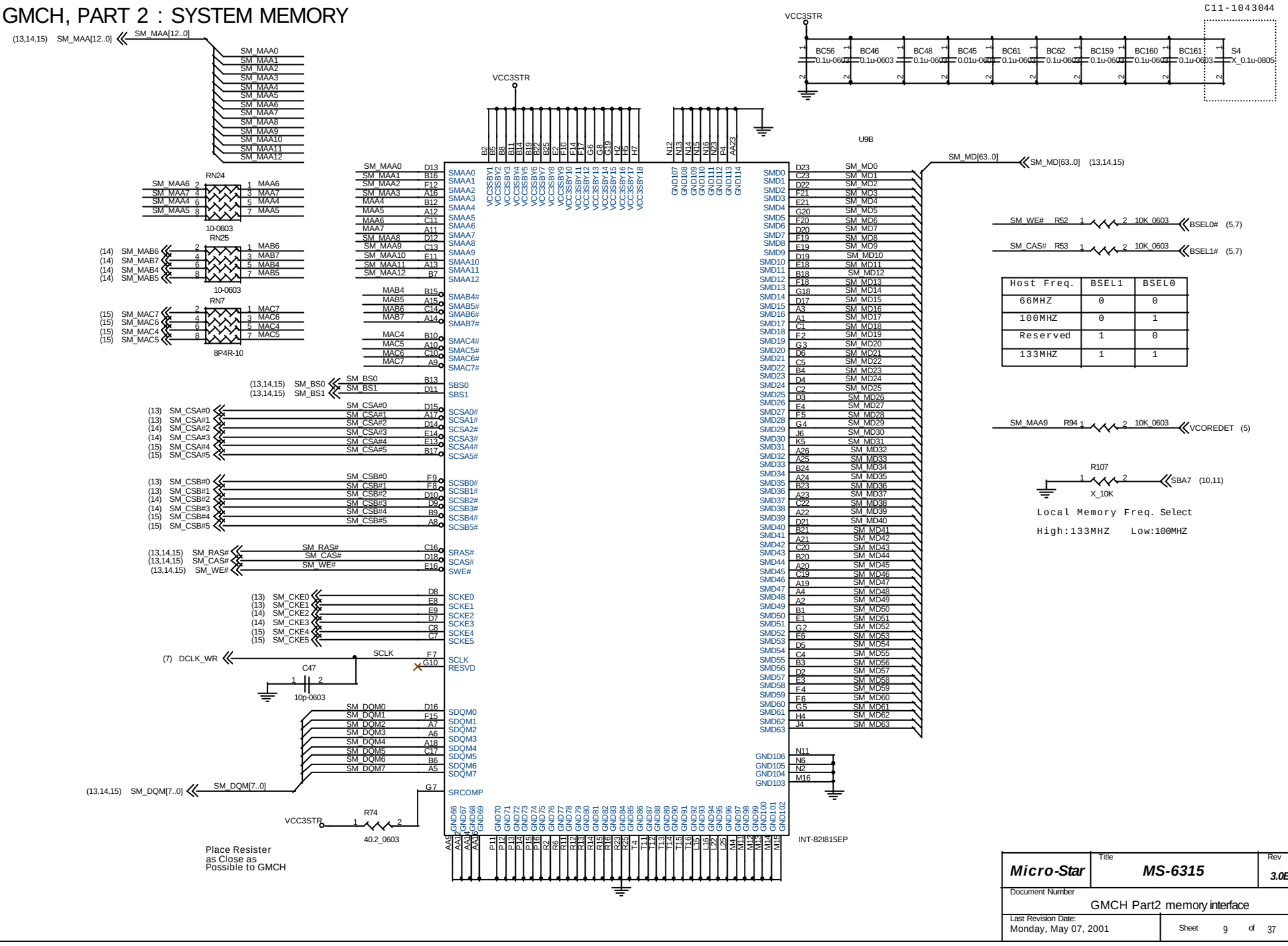

Micro-Star	Title: MS-6315		Rev: 3.0B
Document Number: GMCH Part2 memory interface			
Last Revision Date: Monday, May 07, 2001		Sheet 9 of 37	

GMCH PART 3 : AGP & VIDEO Interface & HUB link

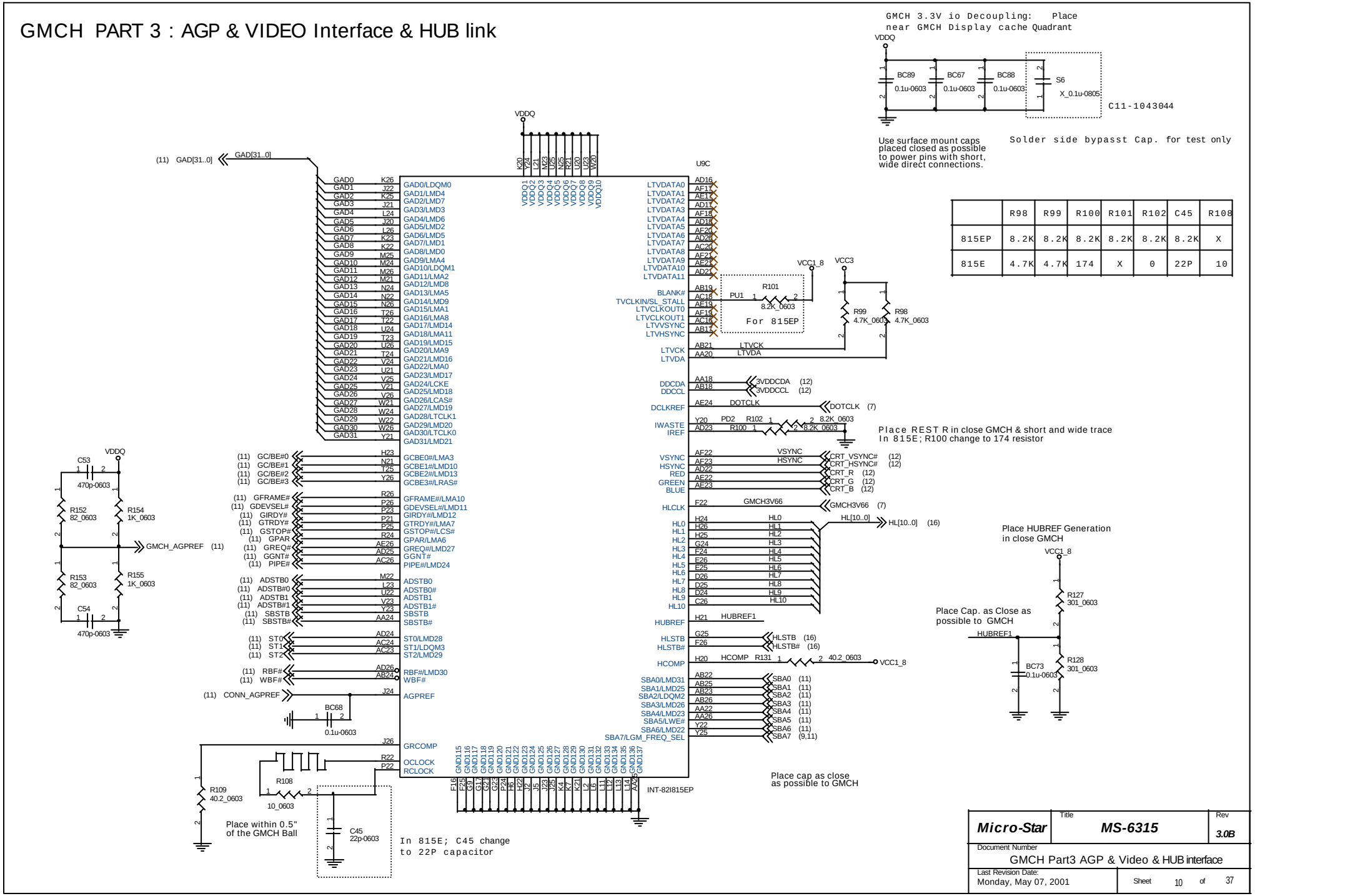

	R98	R99	R100	R101	R102	C45	R108
815EP	8.2K	8.2K	8.2K	8.2K	8.2K	8.2K	X
815E	4.7K	4.7K	174	X	0	22P	10

Micro-Star	Title: MS-6315	Rev: 3.0B
Document Number: GMCH Part3 AGP & Video & HUB interface		
Last Revision Date: Monday, May 07, 2001	Sheet 10 of 37	

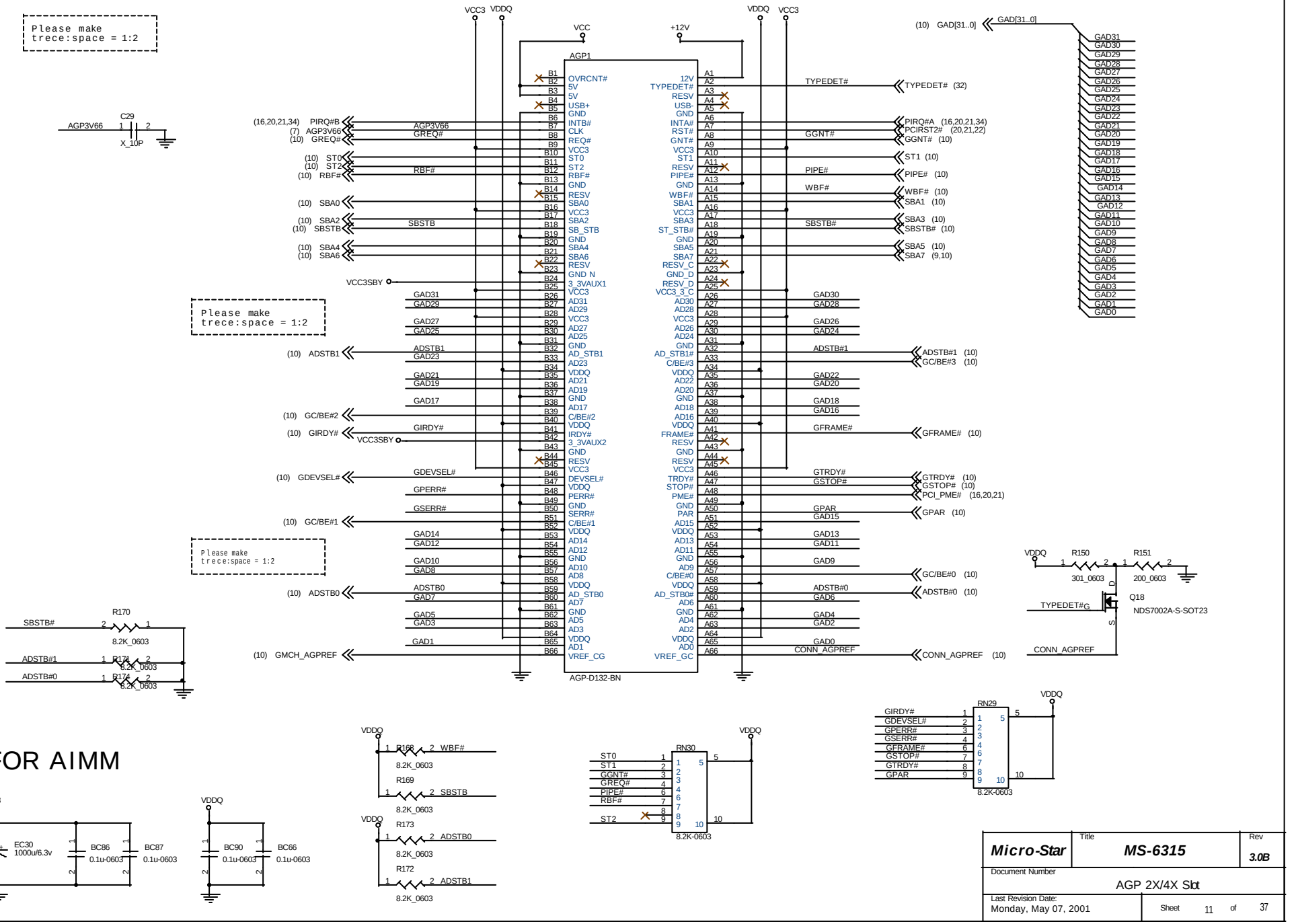

FOR AIMM

Micro-Star	Title: MS-6315		Rev: 3.0B
	Document Number: AGP 2X/4X Slot		
	Last Revision Date: Monday, May 07, 2001	Sheet 11 of 37	

Video Connector

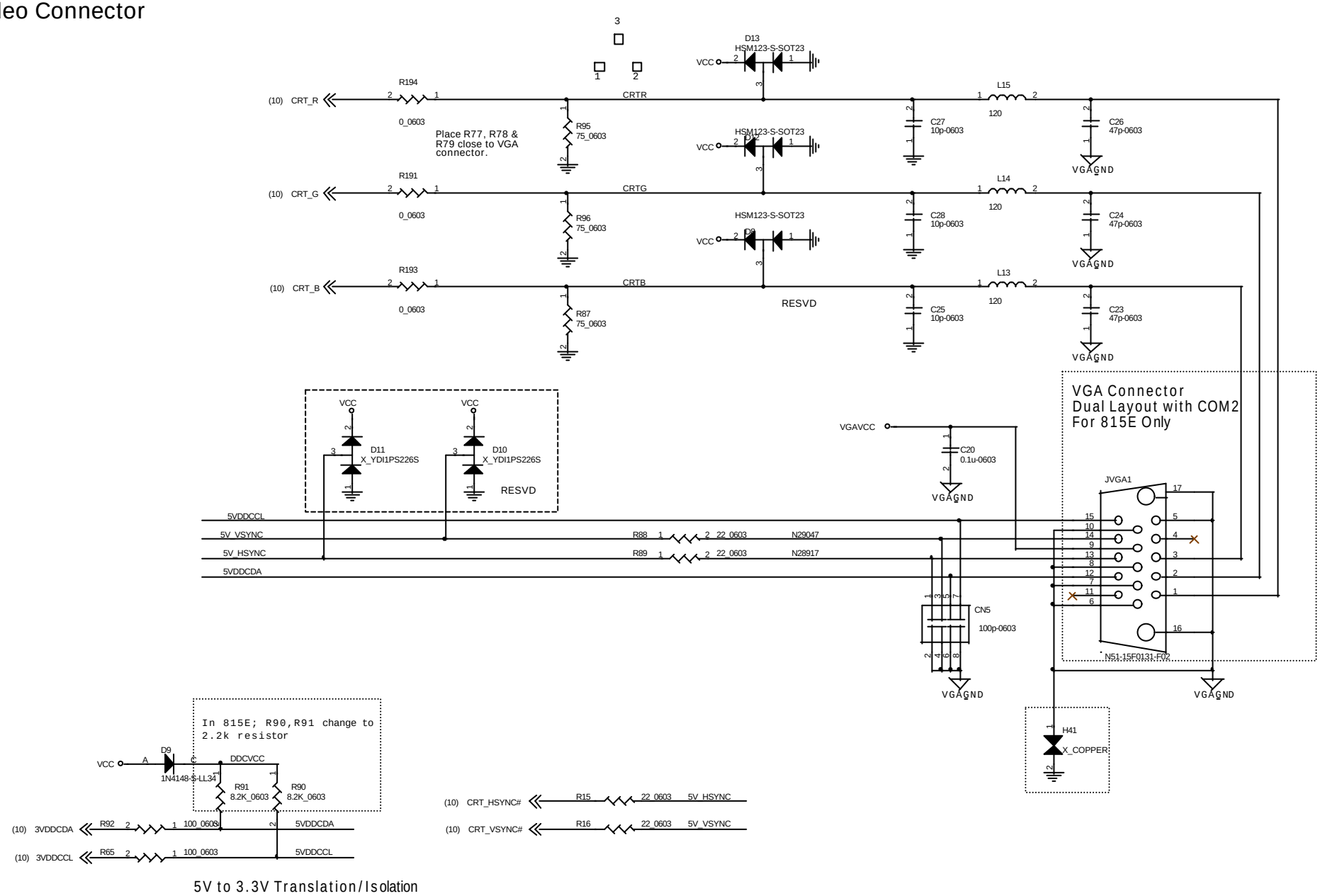

5V to 3.3V Translation/Isolation

Micro-Star	Title: MS-6315	Rev: 3.0B
Document Number: Video Connector		
Last Revision Date: Monday, May 07, 2001	Sheet 12 of 37	

DIMM1

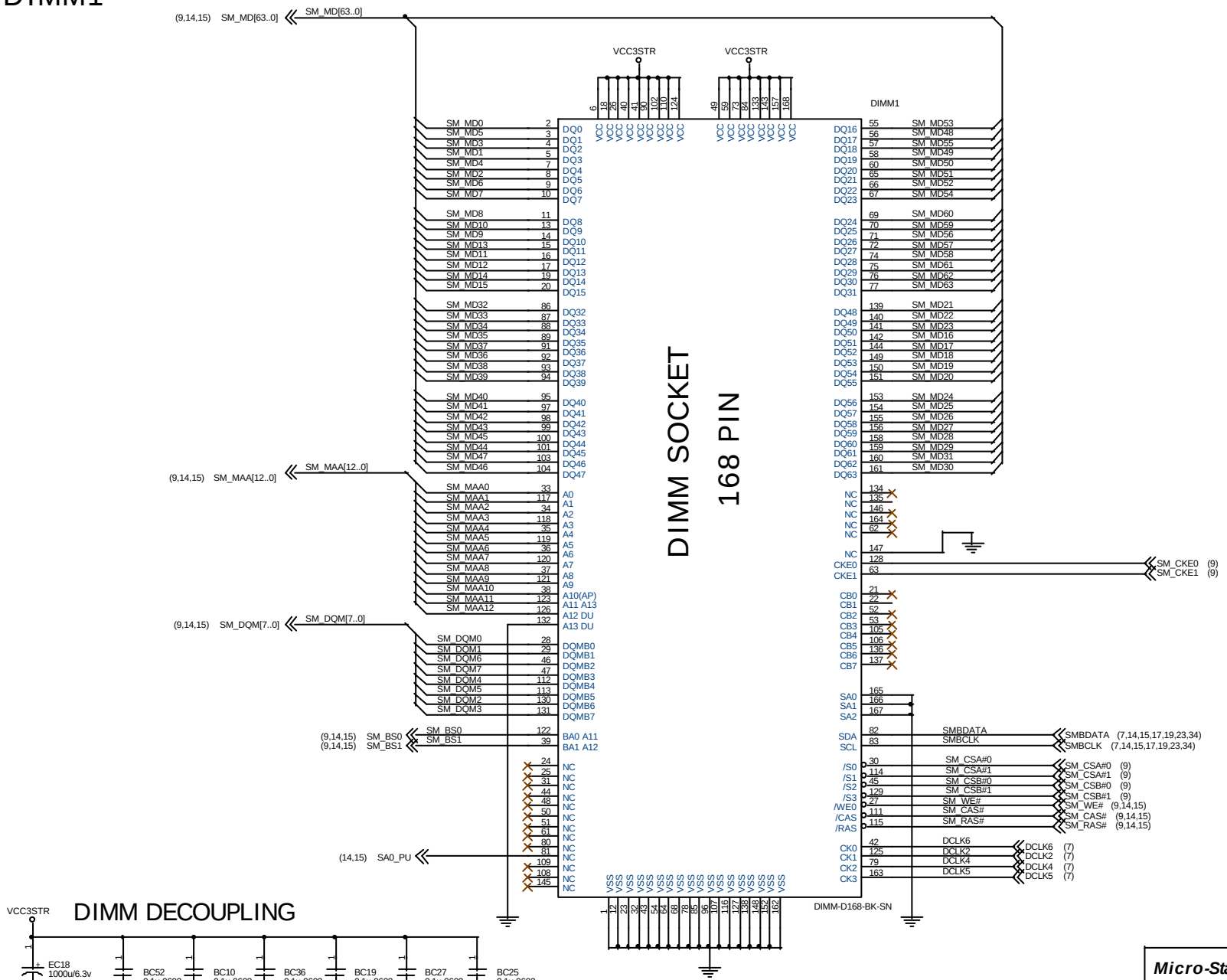

DIMM DECOUPLING

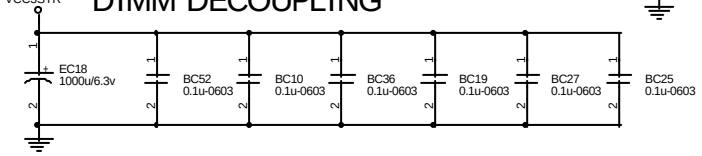

Micro-Star	Title: MS-6315	Rev: 3.0B
Document Number: System Memory: DIMM1		
Last Revision Date: Monday, May 07, 2001	Sheet 13 of 37	

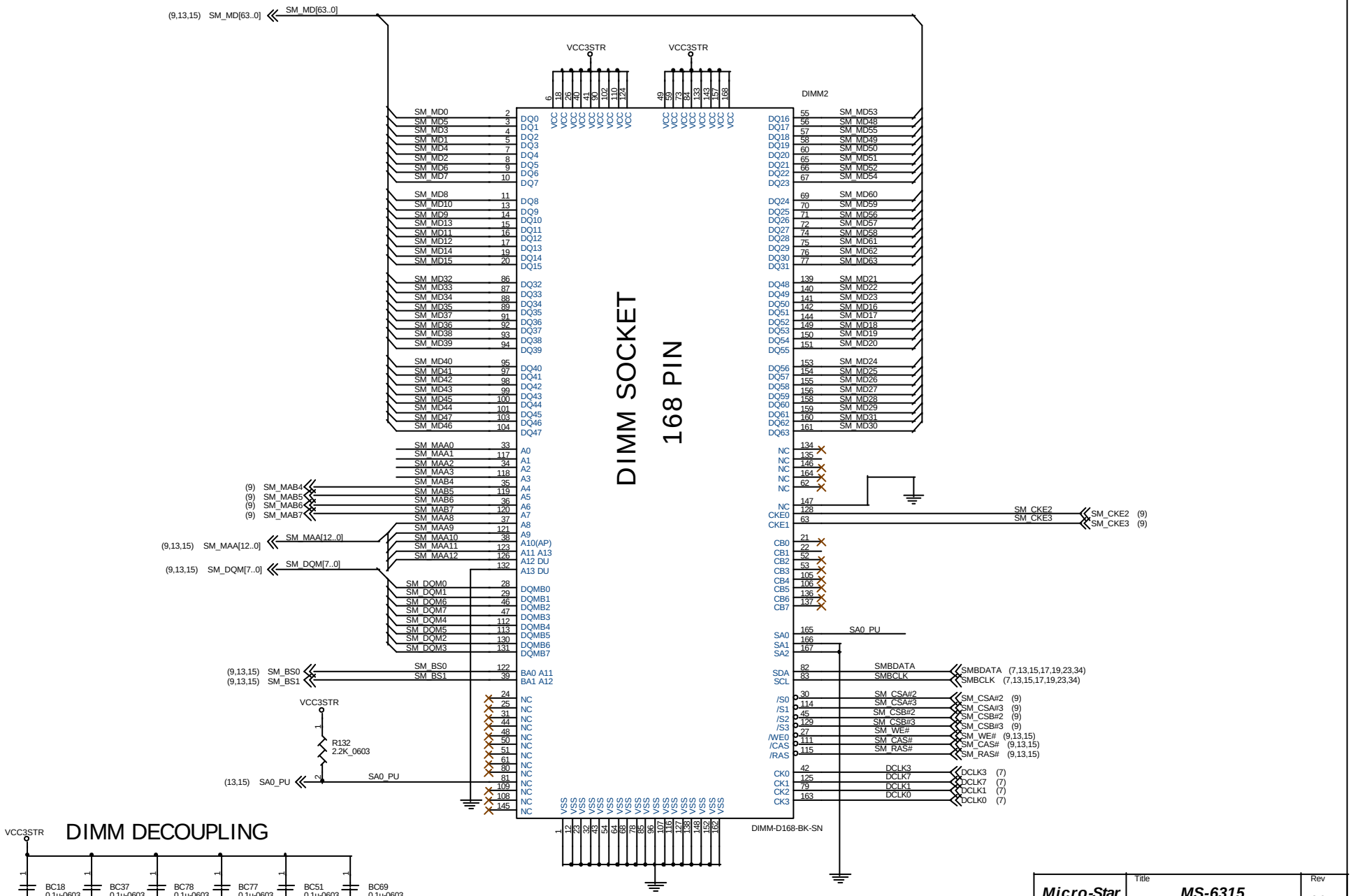

Micro-Star	Title: MS-6315	Rev: 3.0B
Document Number: System Memory : DIMM2		
Last Revision Date: Monday, May 07, 2001	Sheet 14 of 37	

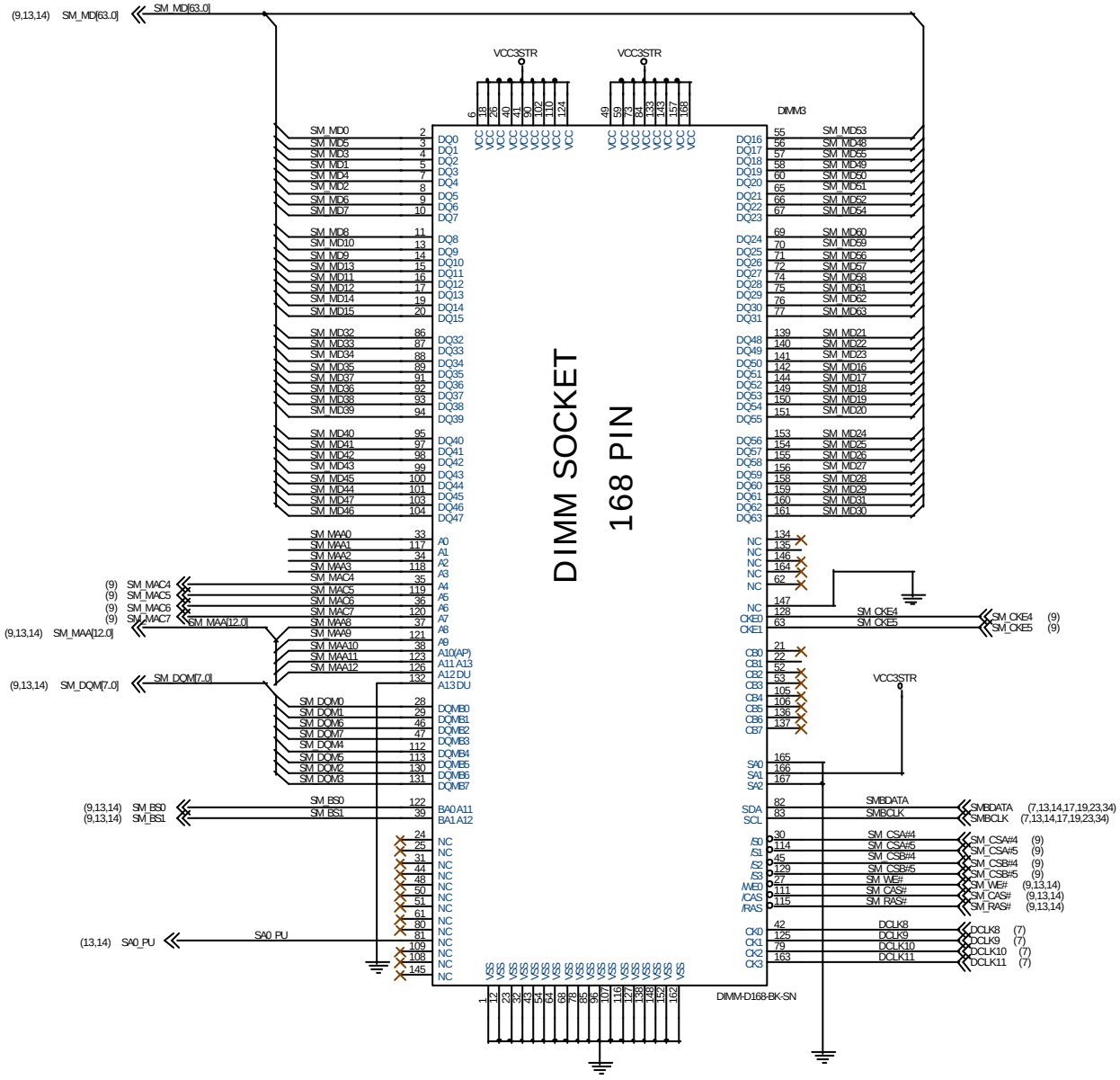

Micro-Star	Title: MS-6315	Rev: 3.0B
Document Number: System Memory : DIMM3		
Last Revision Date: Monday, May 07, 2001	Sheet 15 of 37	

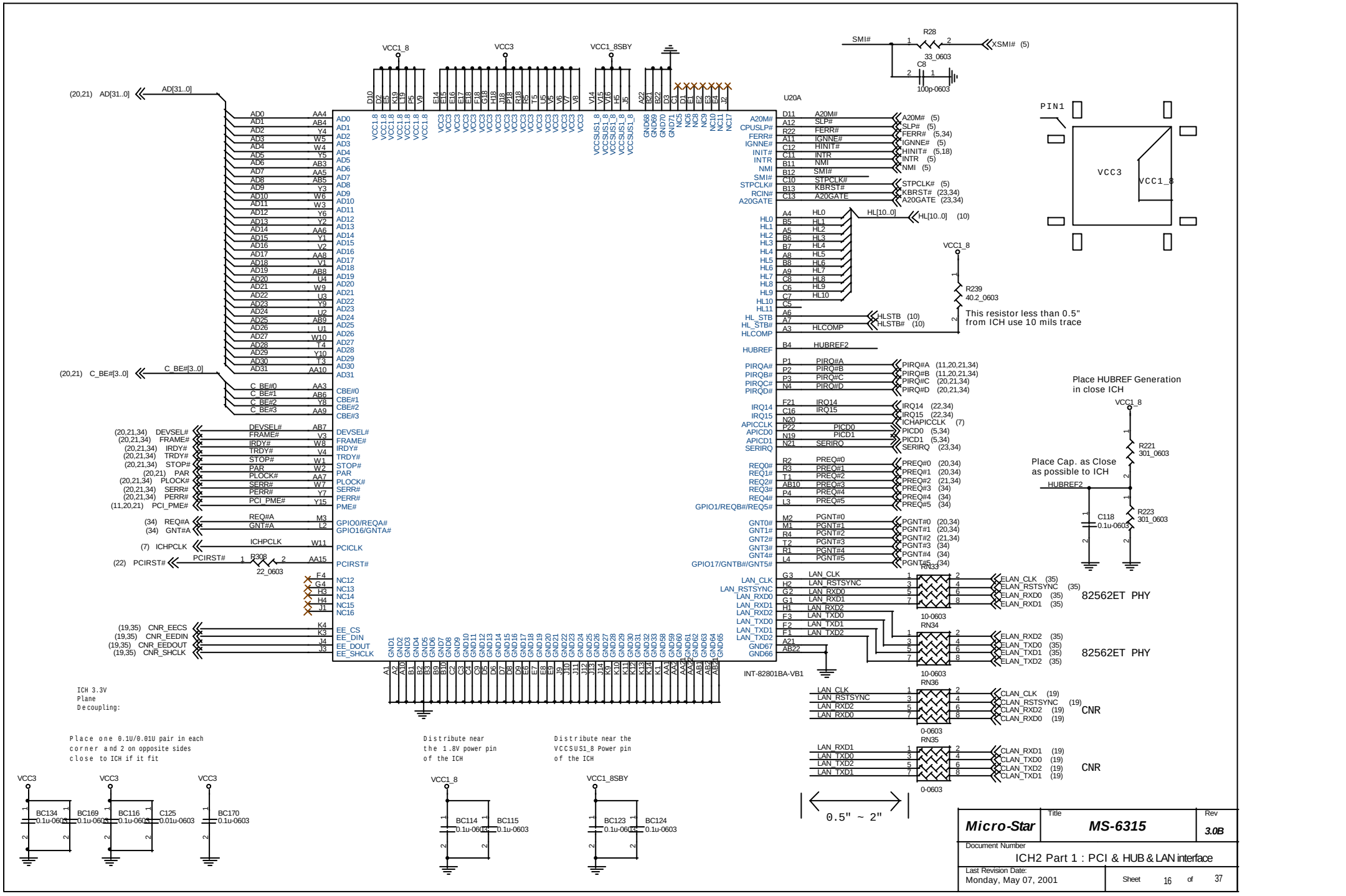
U20A
INT-82801BA-VB1
SMI# R28 33_0603 XSMI# (5)
C8 100p-0603
PIN1
VCC3
VCC1_8
R239 40.2_0603
This resistor less than 0.5" from ICH use 10 mils trace
Place HUBREF Generation in close ICH
Place Cap. as Close as possible to ICH
R221 301_0603
R223 301_0603
C118 0.1u-0603
82562ET PHY
82562ET PHY
CNR
CNR
RN33
RN34
RN36
RN35
10-0603
0-0603
0.5" ~ 2"
ICH 3.3V Plane Decoupling:
Place one 0.1U/0.01U pair in each corner and 2 on opposite sides close to ICH if it fit
Distribute near the 1.8V power pin of the ICH
Distribute near the VCCSUS1_8 Power pin of the ICH
BC134 0.1u-0603
BC169 0.1u-0603
BC116 0.1u-0603
C125 0.01u-0603
BC170 0.1u-0603
BC114 0.1u-0603
BC115 0.1u-0603
BC123 0.1u-0603
BC124 0.1u-0603
Micro-Star
MS-6315
3.0B
ICH2 Part 1 : PCI & HUB & LAN interface
Monday, May 07, 2001
Sheet 16 of 37

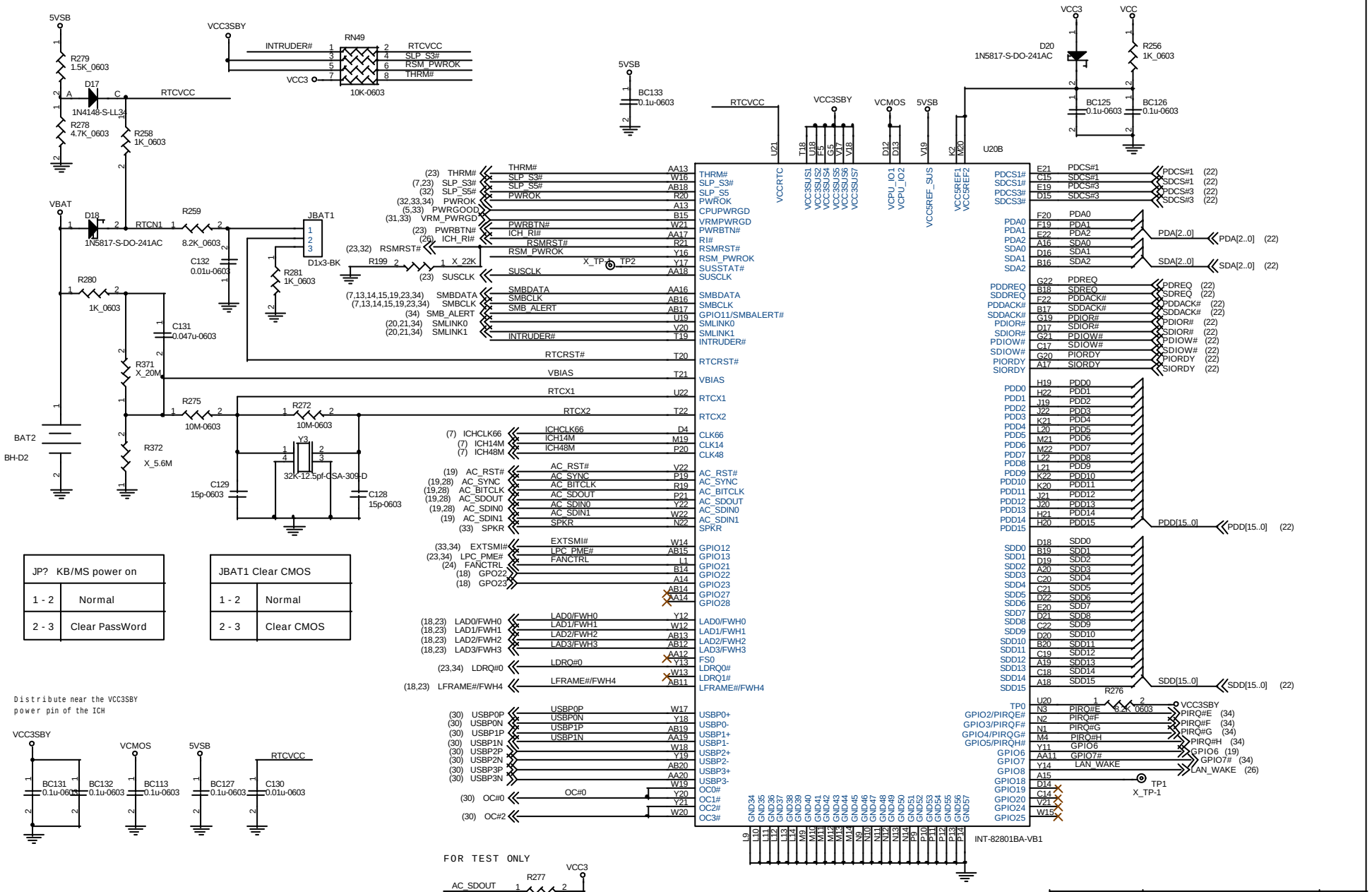

Micro-Star	Title: MS-6315		Rev: 3.0B
Document Number: ICH2 Part 2 : RTC & IDE & AC97 & USB interface			
Last Revision Date: Monday, May 07, 2001		Sheet 17 of 37	

Firware Hub (FWH)

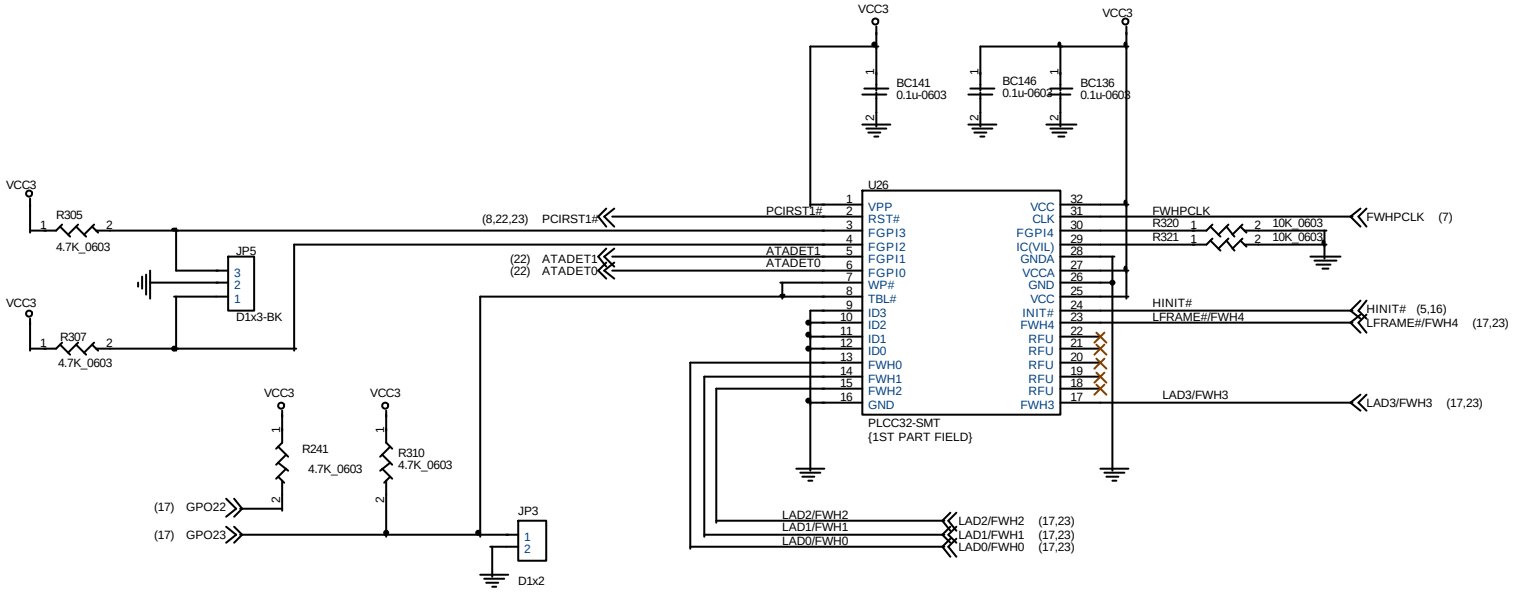

*	JP5 BIOS Update Configuration	
*	1 - 2	Normal Mode
	2 - 3	Boot auto clear CMOS
	OPEN	Flash from FDD

*	JP3 BIOS Update	
	SHORT	Locked
*	OPEN	Unlocked

Micro-Star	Title: MS-6315	Rev: 3.0B
Document Number: Firware HUB (FWH)		
Last Revision Date: Monday, May 07, 2001	Sheet 18 of 37	

CNR RISER

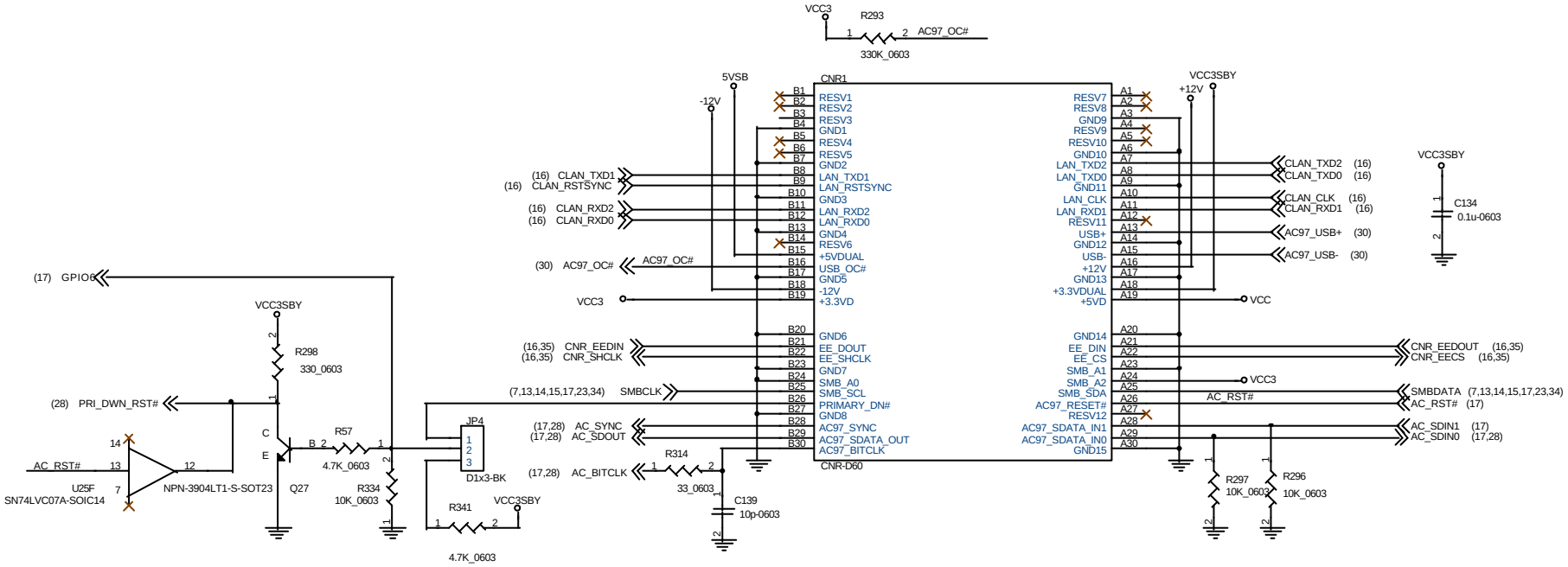

JP4	AUDIO DOWN
1 - 2	Auto mode
2 - 3	Primary audio codec onboard

Micro-Star	Title: MS-6315	Rev: 3.0B
Document Number: CNR Slot		
Last Revision Date: Monday, May 07, 2001	Sheet 19 of 37	

PCI Connectors

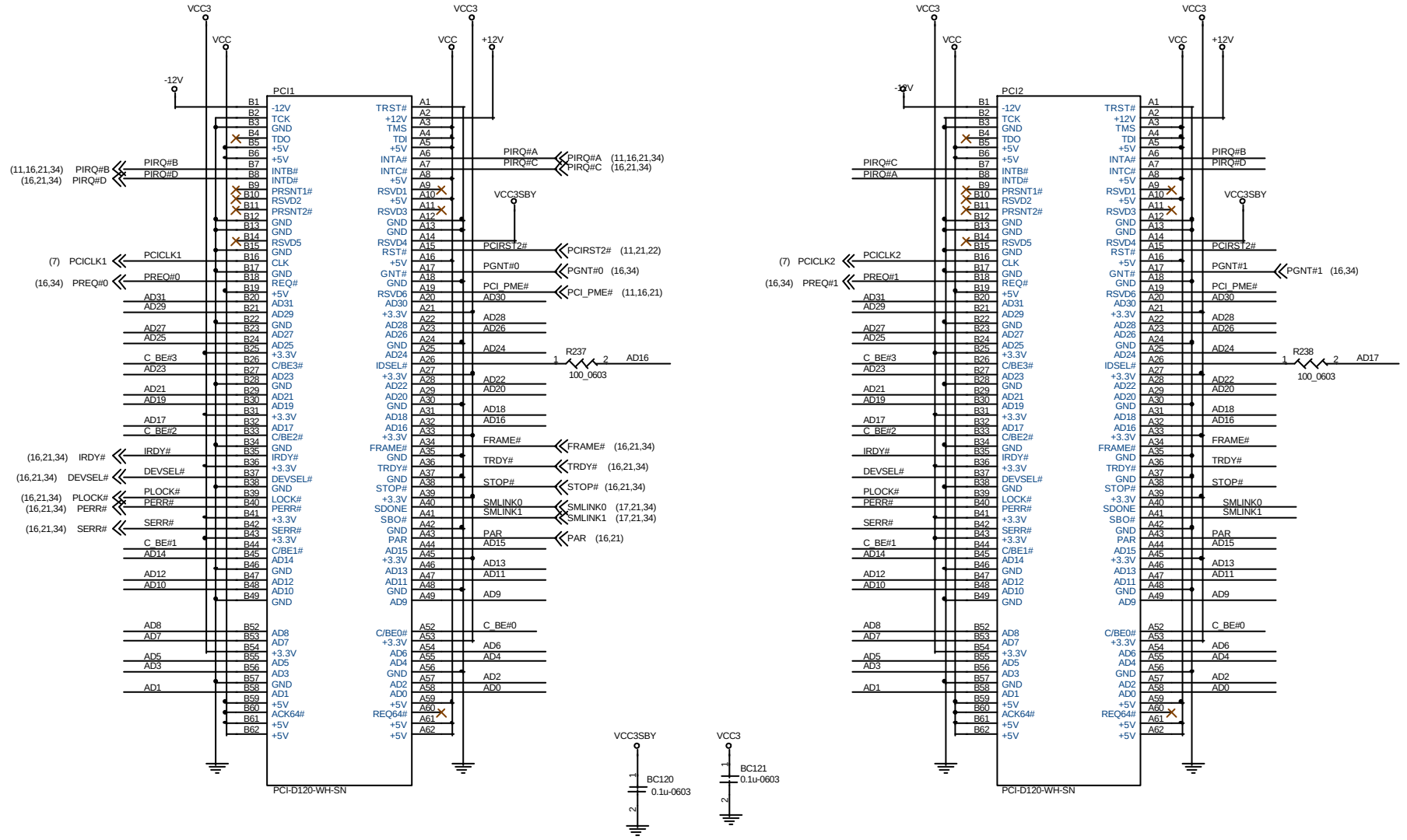

Micro-Star	Title: MS-6315	Rev: 3.0B
Document Number: PCI Slot 1 & 2		
Last Revision Date: Monday, May 07, 2001	Sheet 20 of 37	

PCI Slot

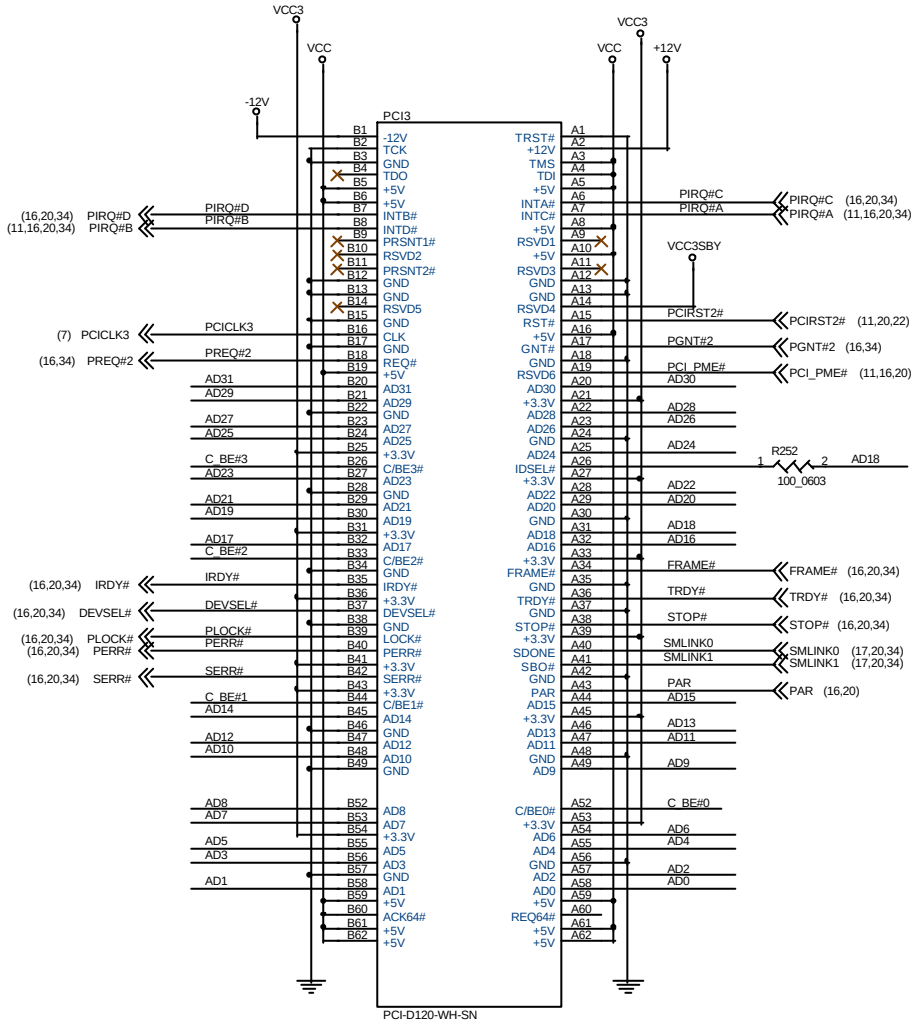

(16,20) AD[31..0] AD[31..0]

(16,20) C_BE#[3..0] C_BE#[3..0]

Micro-Star	Title: MS-6315	Rev: 3.0B
Document Number: PCI Slot 3		
Last Revision Date: Monday, May 07, 2001	Sheet 21 of 37	

ATA66 IDE CONNECTORS

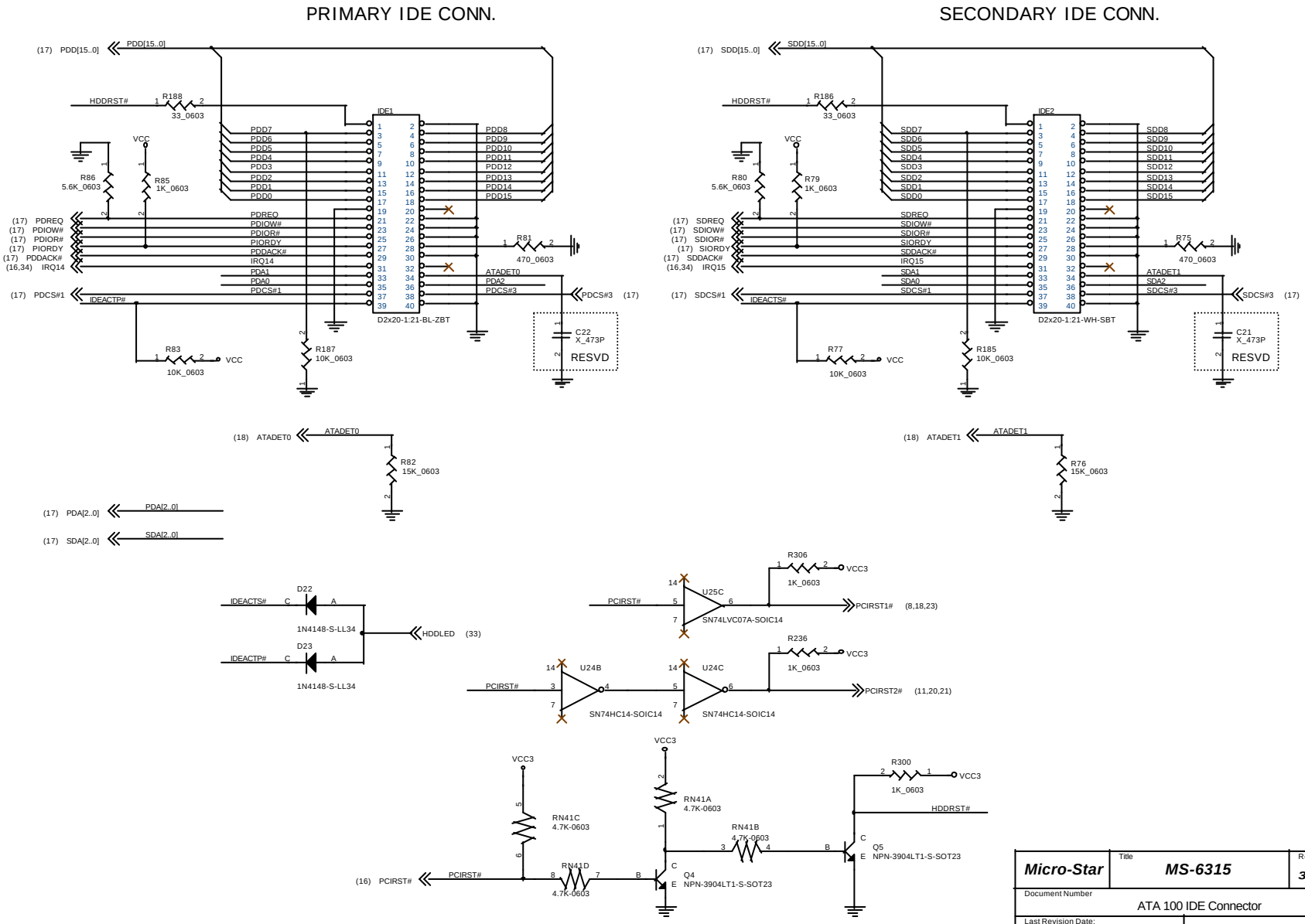

Micro-Star	Title: MS-6315	Rev: 3.0B
Document Number: ATA 100 IDE Connector		
Last Revision Date: Monday, May 07,2001	Sheet 22 of 37	

Super I/O

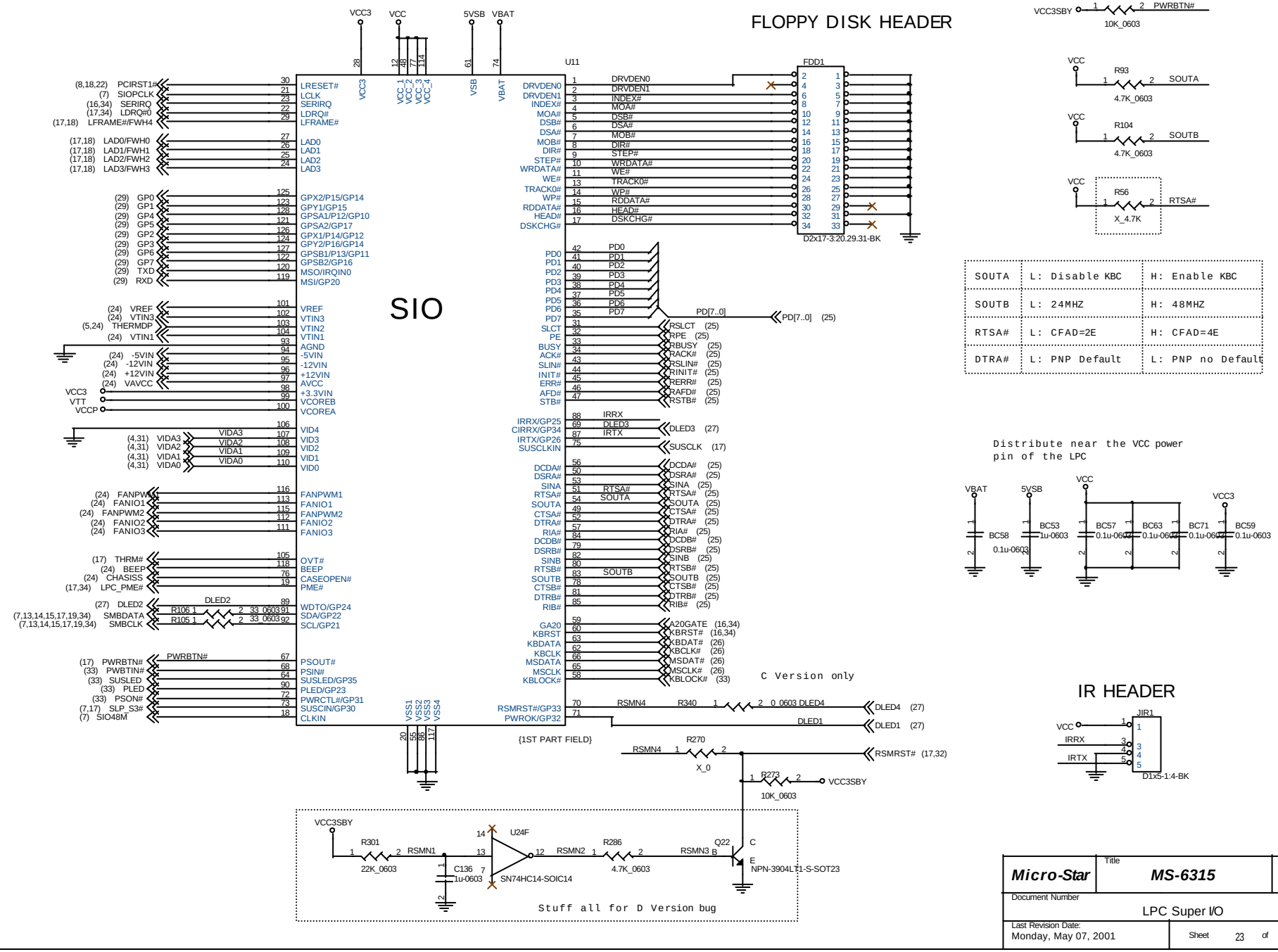

Micro-Star	Title: MS-6315	Rev: 3.0B
Document Number: LPC Super I/O		
Last Revision Date: Monday, May 07, 2001	Sheet 23 of 37	

Hardware Monitor

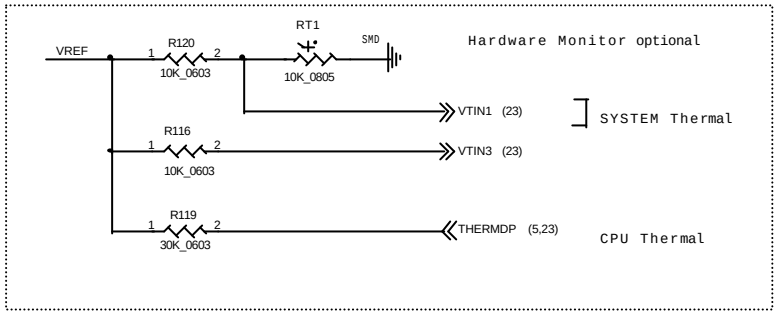

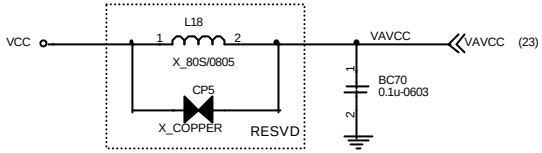

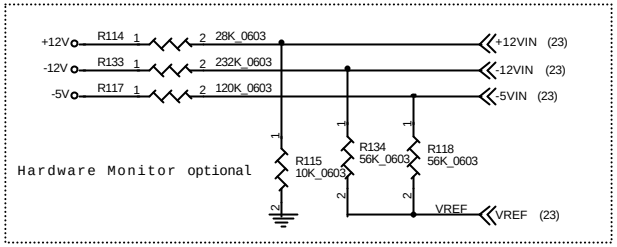

Chasiss Intrusion Header

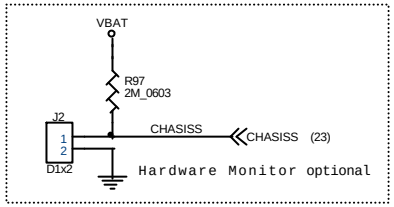

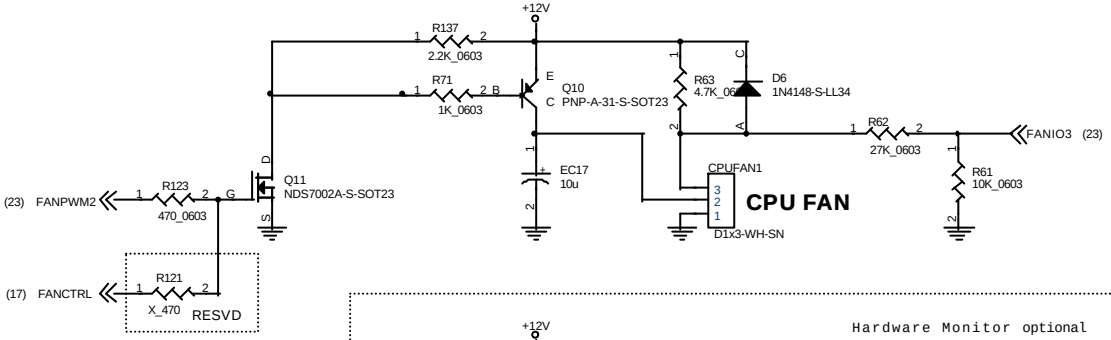

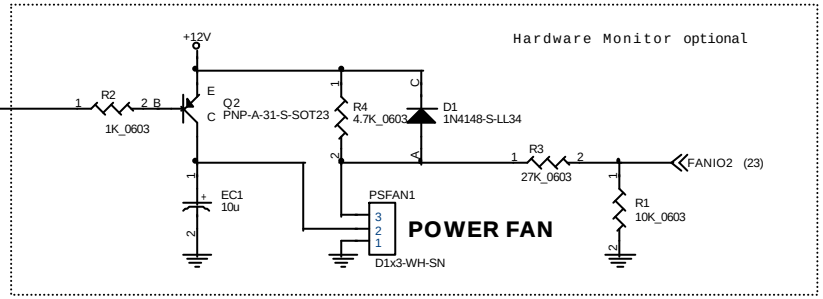

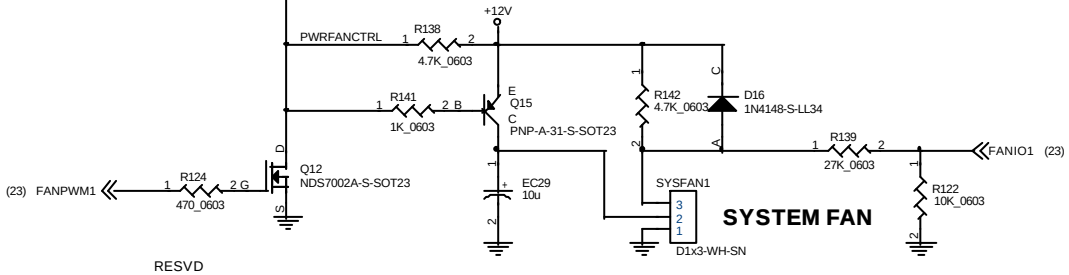

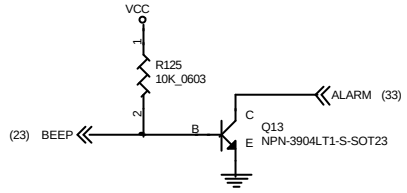

Micro-Star	Title: MS-6315	Rev: 3.0B
Document Number: Hardware Monitor		
Last Revision Date: Monday, May 07, 2001	Sheet 24 of 37	

Parallel Port / COM1port & COM2 Header

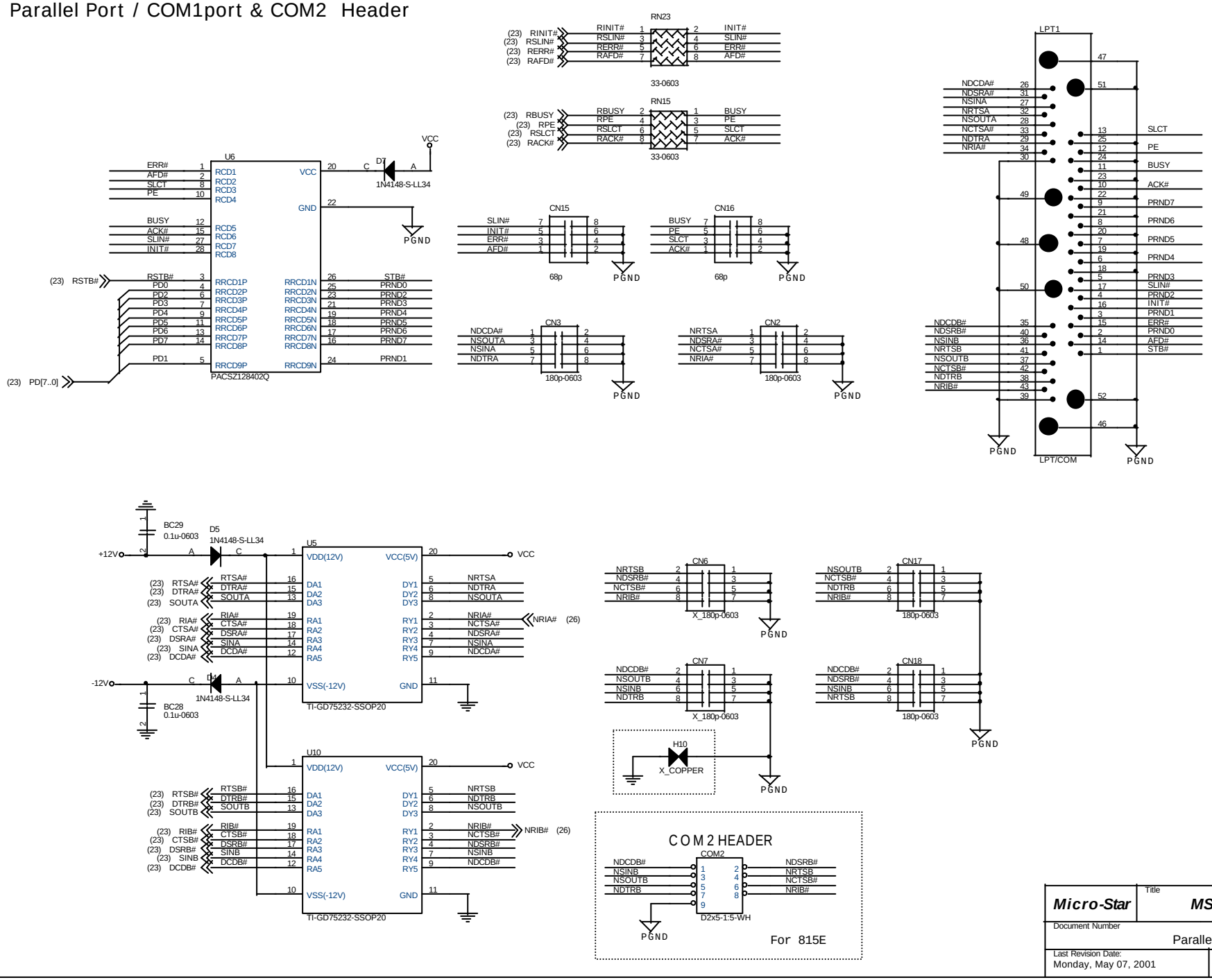

Micro-Star	Title: MS-6315	Rev: 3.0B
Document Number: Parallel Port Header		
Last Revision Date: Monday, May 07, 2001	Sheet 25 of 37	

KEYBOARD/MOUSE PORTS

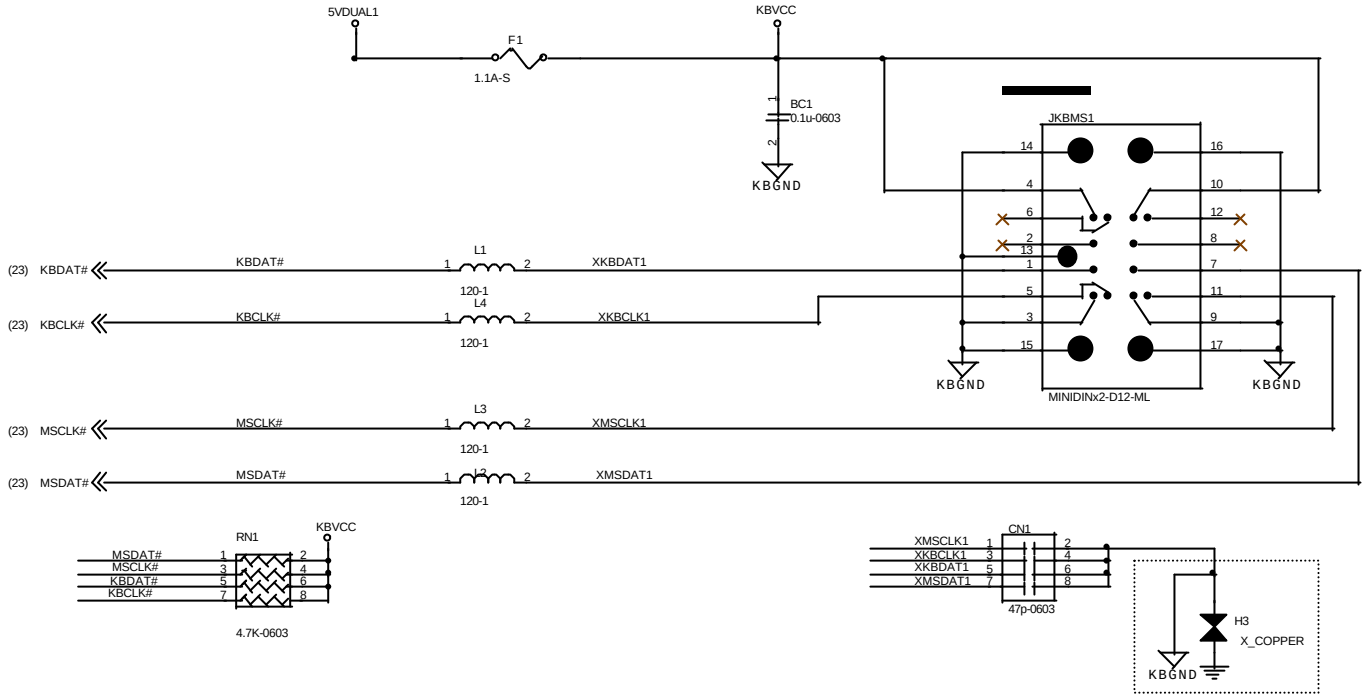

LAN WAKEUP HEADER

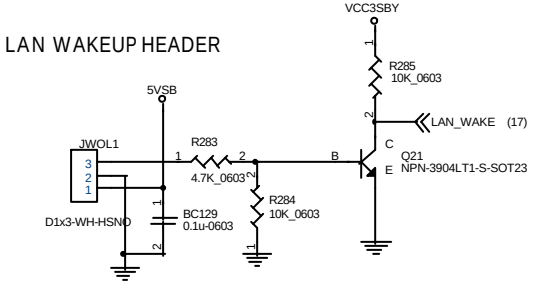

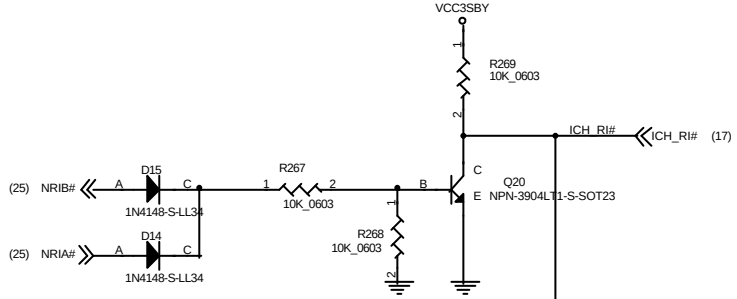

INTERNAL MODEM WAKEUP HEADER

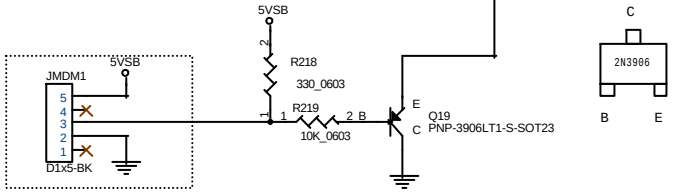

Micro-Star	Title: MS6315	Rev: 3.0B
Document Number: Keyboard board / Mouse port		
Last Revision Date: Monday, May 07, 2001	Sheet 26 of 37	

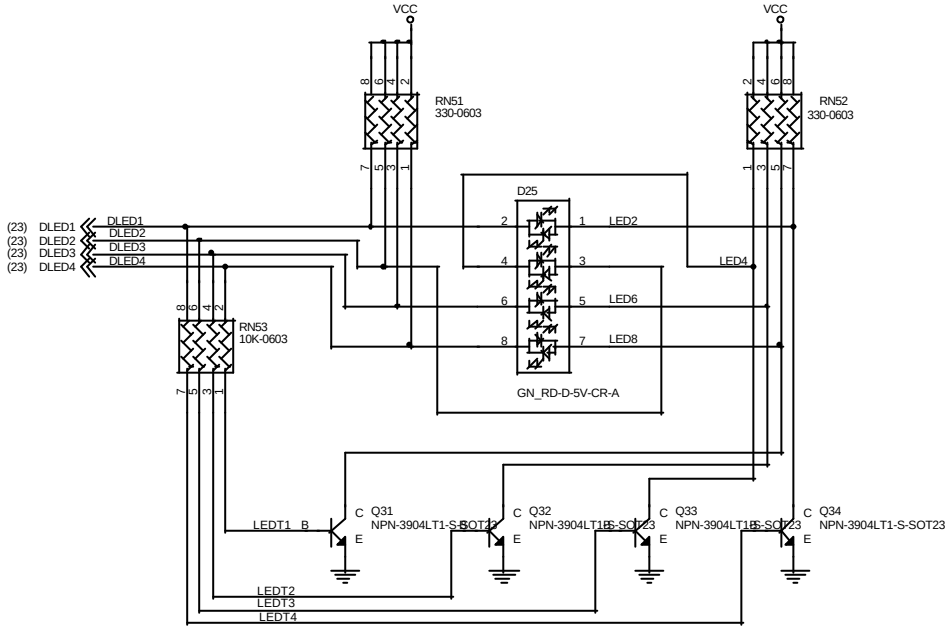

Micro-Star	Title: MS6315	Rev: 3.0B
Document Number: PCI Hardware Audio		
Last Revision Date: Monday, May 07, 2001	Sheet 27 of 37	

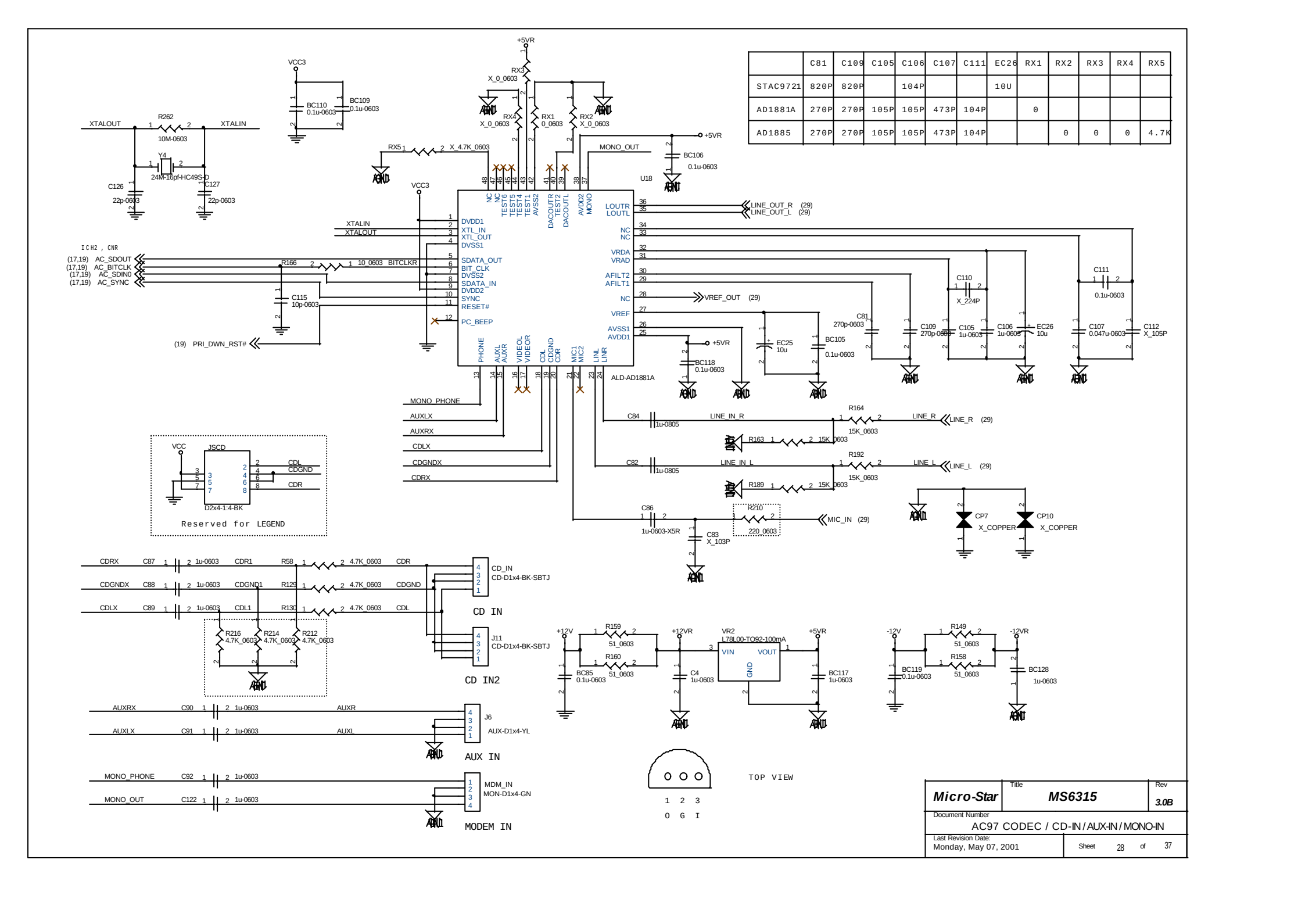

	C81	C109	C105	C106	C107	C111	EC26	RX1	RX2	RX3	RX4	RX5
STAC9721	820P	820P		104P			10U					
AD1881A	270P	270P	105P	105P	473P	104P		0				
AD1885	270P	270P	105P	105P	473P	104P			0	0	0	4.7K

Micro-Star	Title: MS6315		Rev: 3.0B
Document Number: AC97 CODEC / CD-IN / AUX-IN / MONO-IN			
Last Revision Date: Monday, May 07, 2001	Sheet 28 of 37		

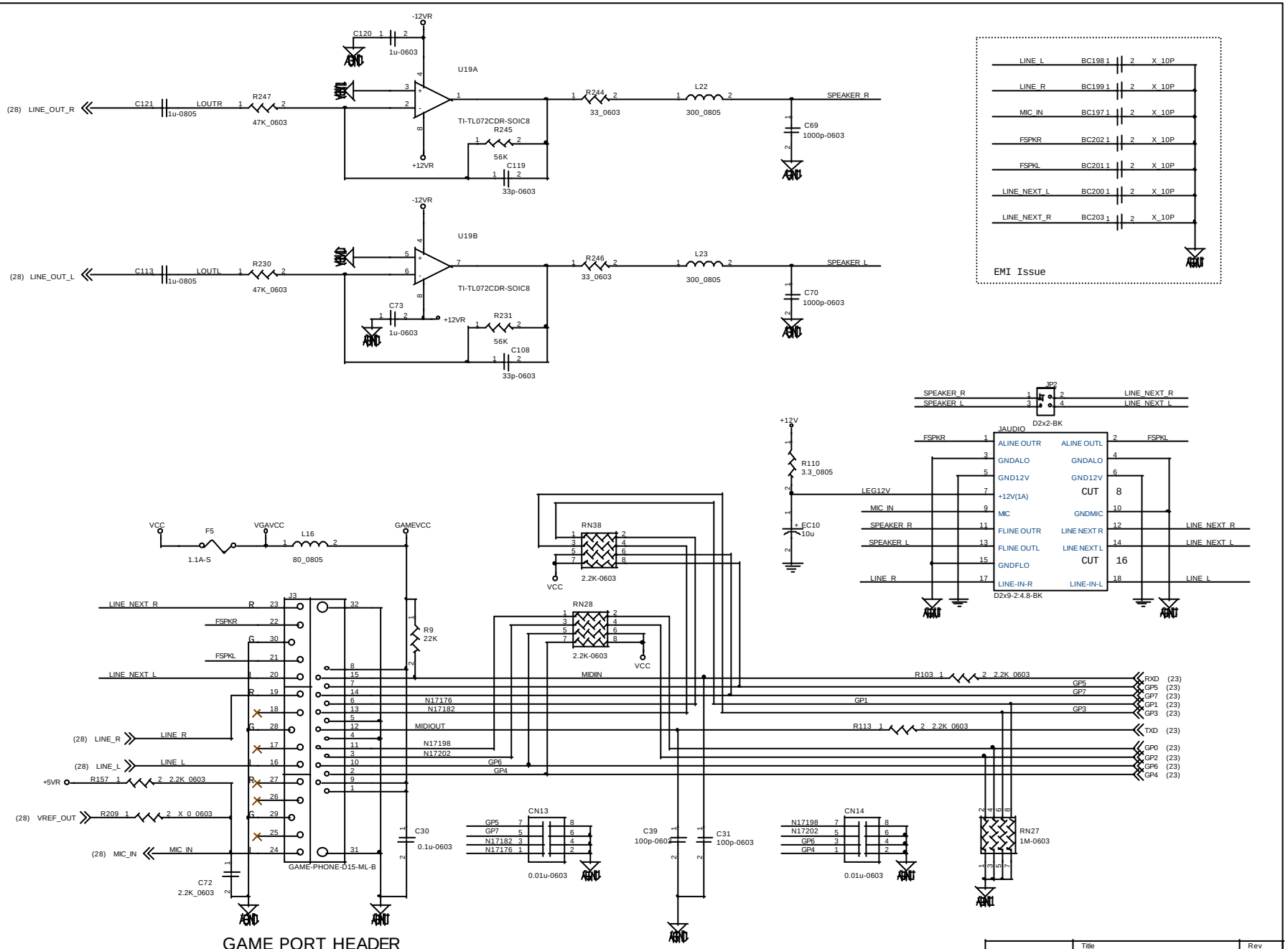

GAME PORT HEADER

Micro-Star	Title: MS6315	Rev: 3.0B
Document Number: Audio Amplifier & Game port Connector		
Last Revision Date: Monday, May 07,2001	Sheet 29 of 37	

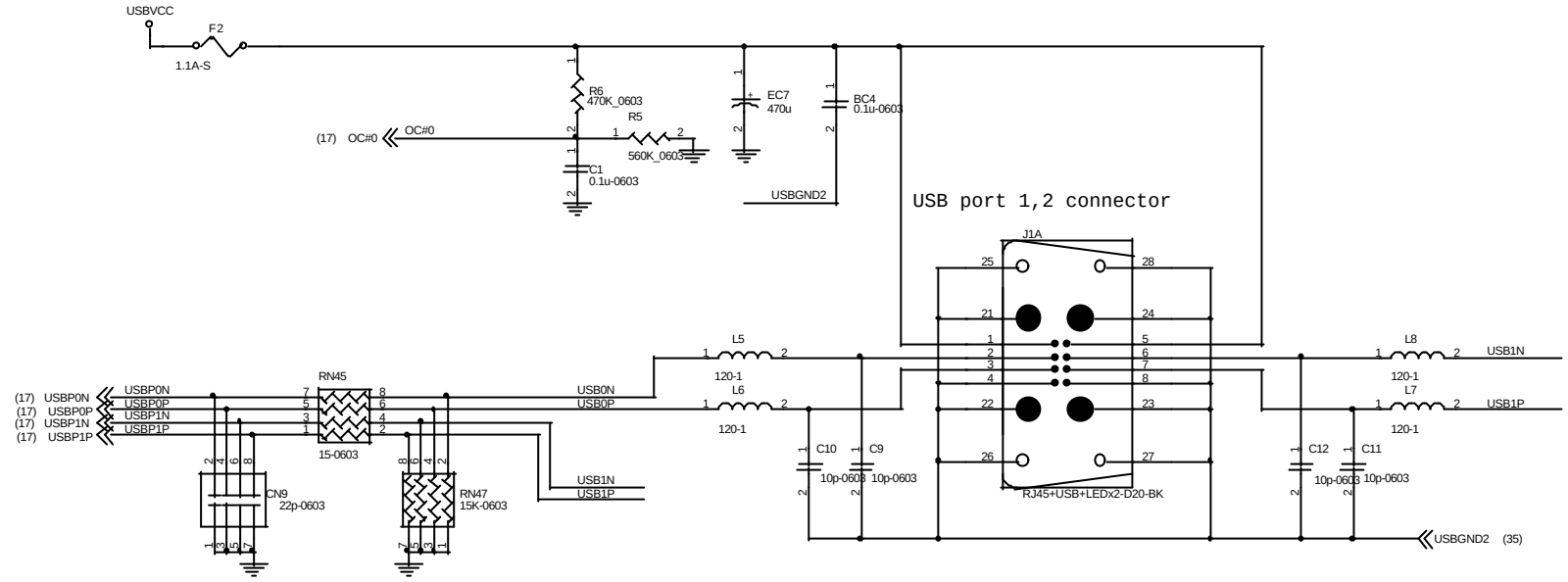

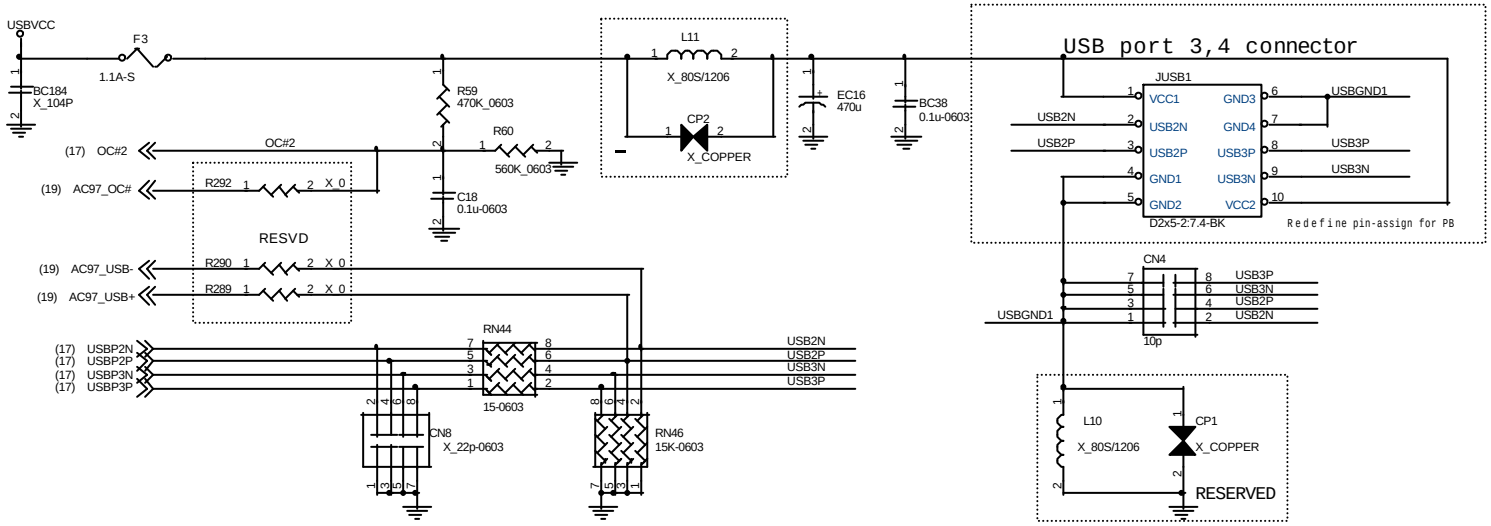

Micro-Star	Title: MS6315	Rev: 3.0B
Document Number: USB Connector		
Last Revision Date: Monday, May 07, 2001	Sheet 30 of 37	

VRM 8.4

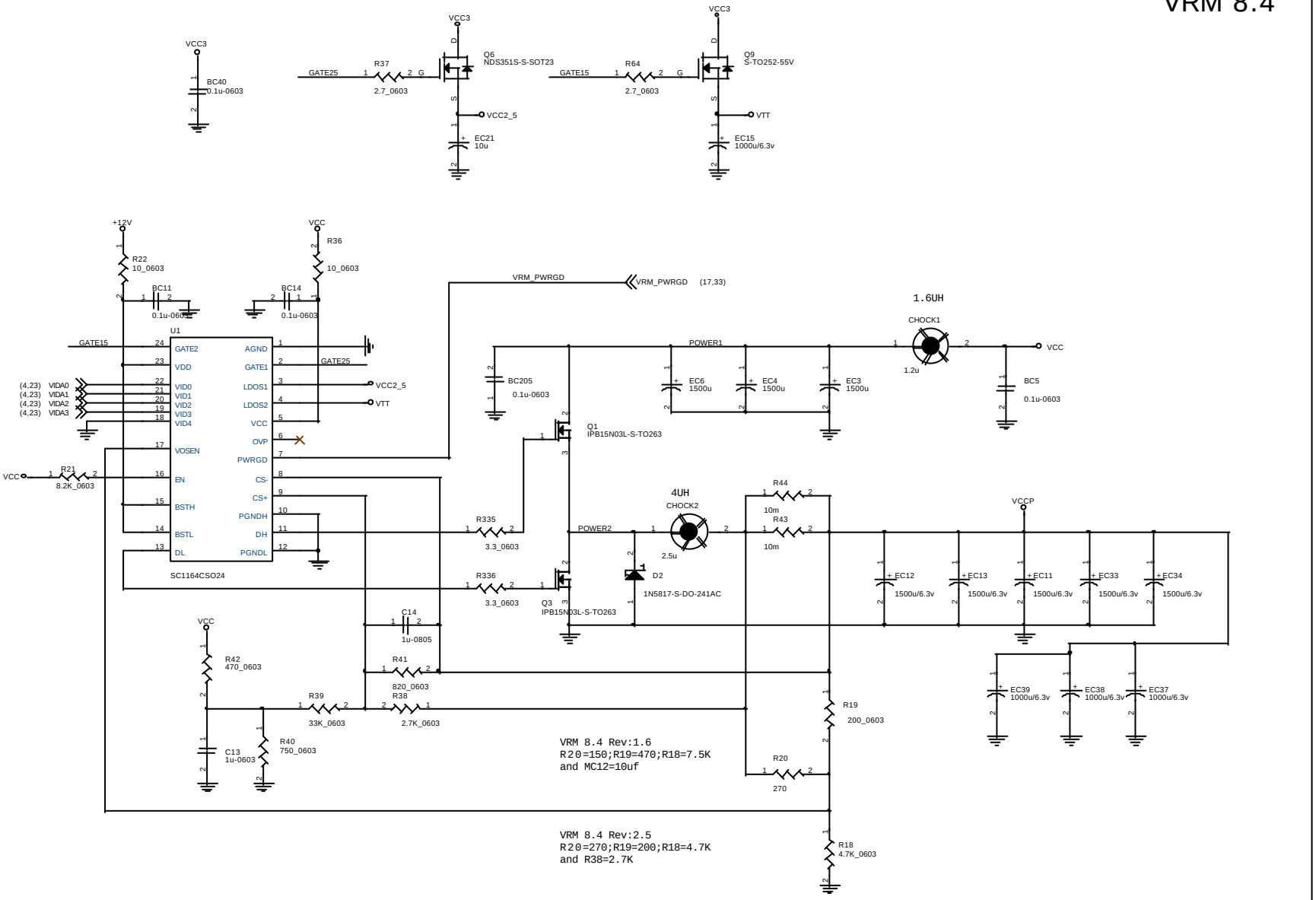

Micro-Star	Title: MS6315	Rev: 3.0B
Document Number: VRM 8.4 (SC1164) / VCCP , VCC2_5 , VTT		
Last Revision Date: Monday, May 07,2001	Sheet 31 of 37	

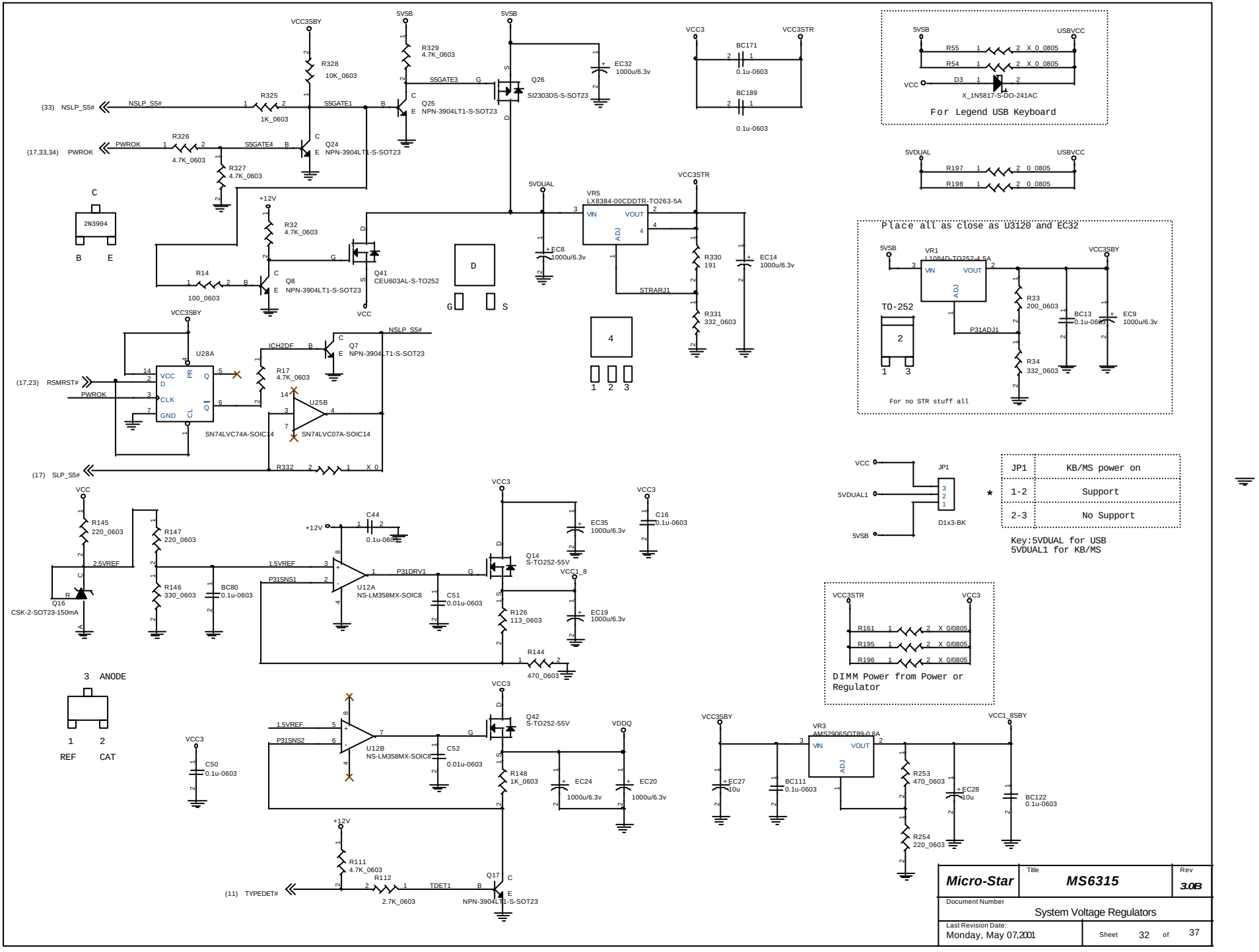

Micro-Star	Title: MS6315
	Rev: 3.0B
Document Number	System Voltage Regulators
Last Revision Date: Monday, May 07,2001	Sheet 32 of 37

Front Panel & Power Connector

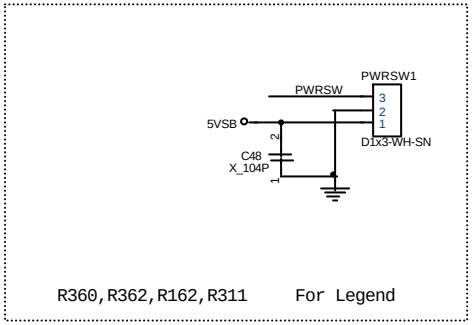

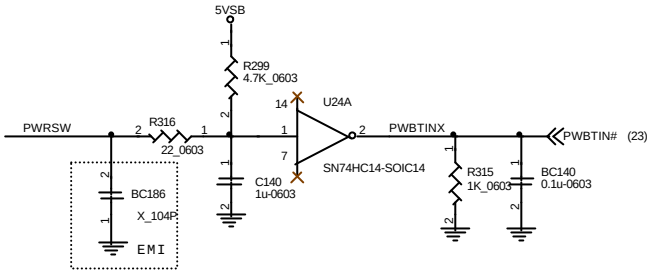

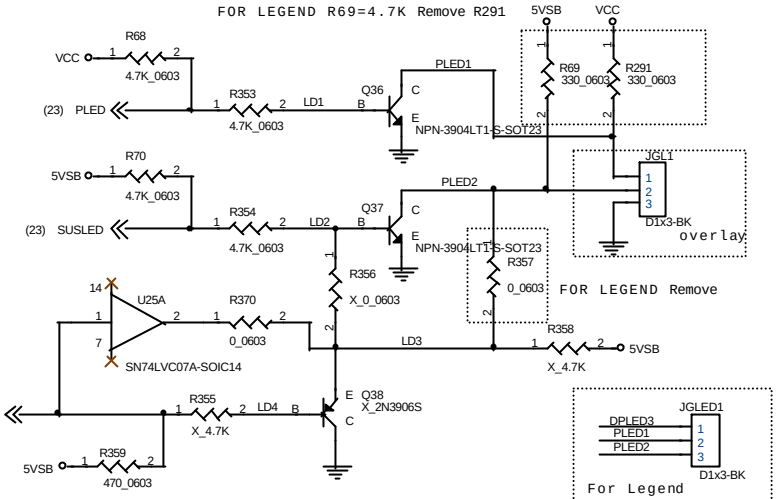

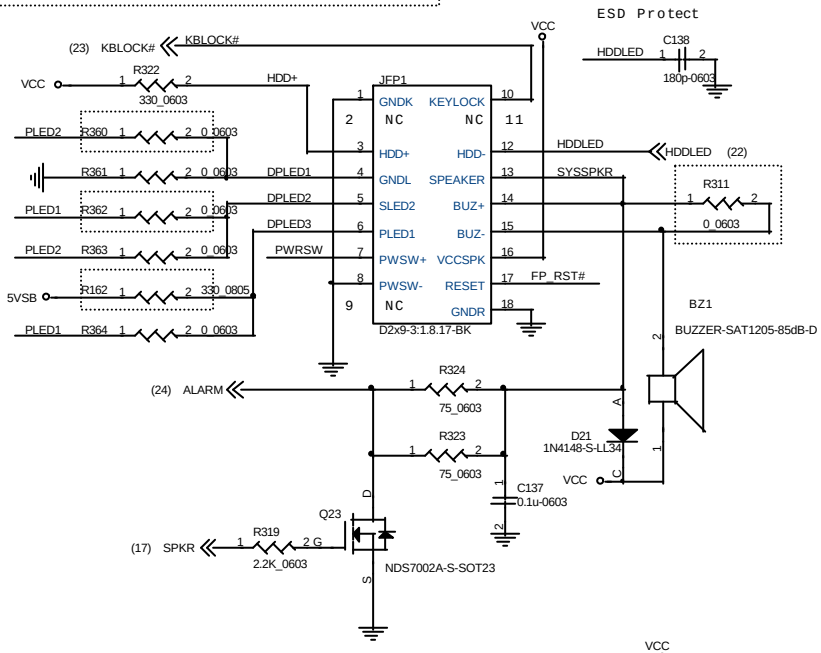

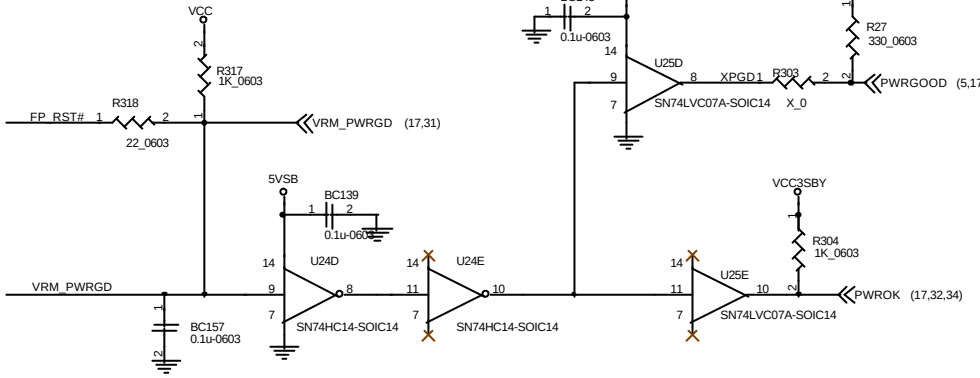

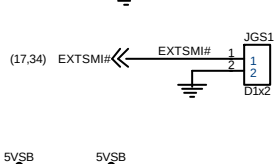

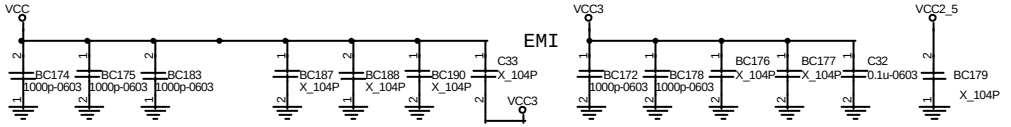

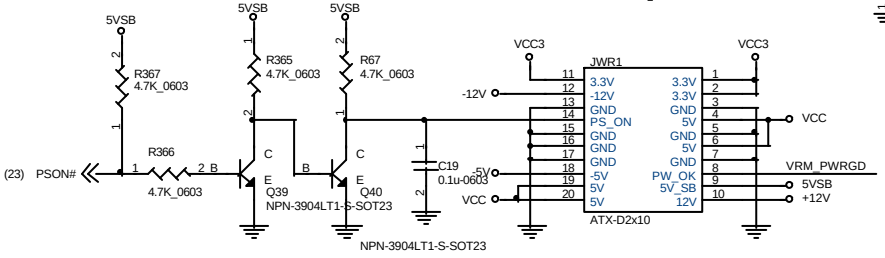

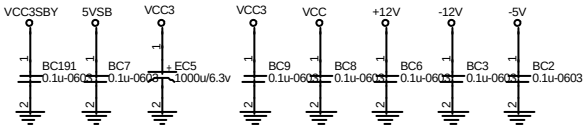

Micro-Star	Title: MS6315	Rev: 3.0B
Document Number: Front Panel and ATX power Connector		
Last Revision Date: Monday, May 07, 2001	Sheet 33 of 37	

PULL-UP RESISTORS

PCI BUS

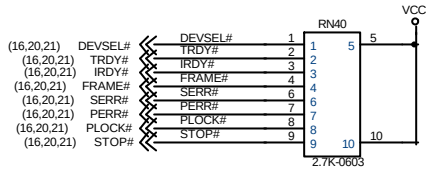

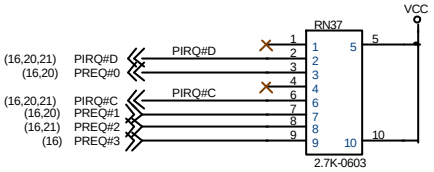

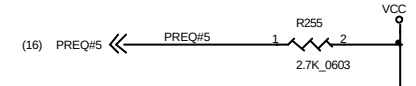

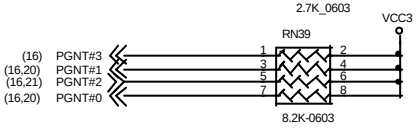

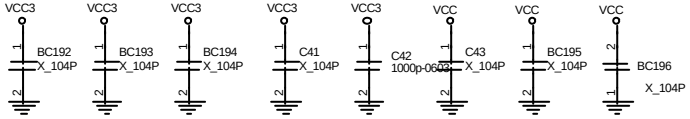

ICH

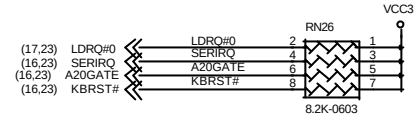

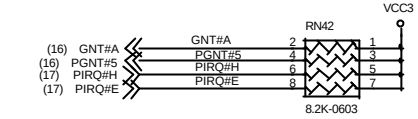

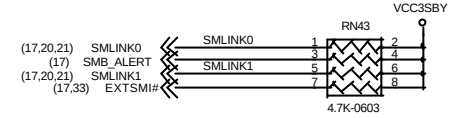

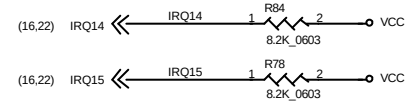

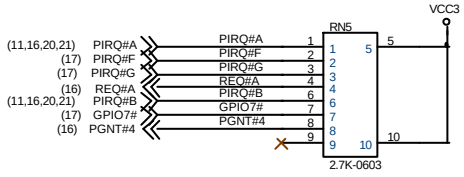

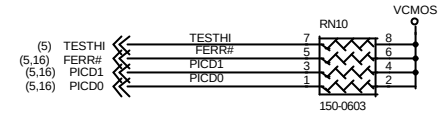

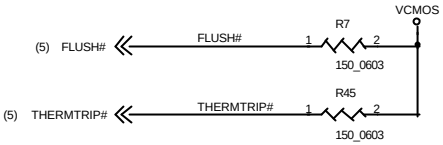

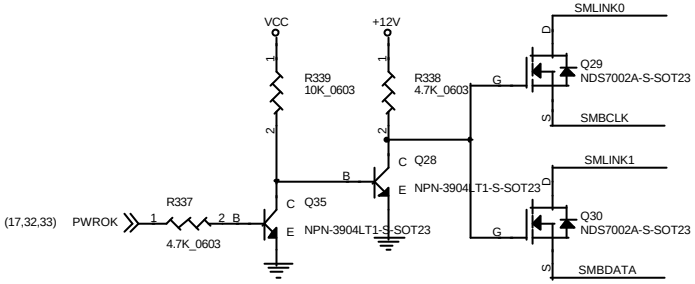

Micro-Star	Title: **MS6315**	Rev: **3.0B**
Document Number: Pull-Up Resistors		
Last Revision Date: Monday, May 07, 2001	Sheet 34 of 37	

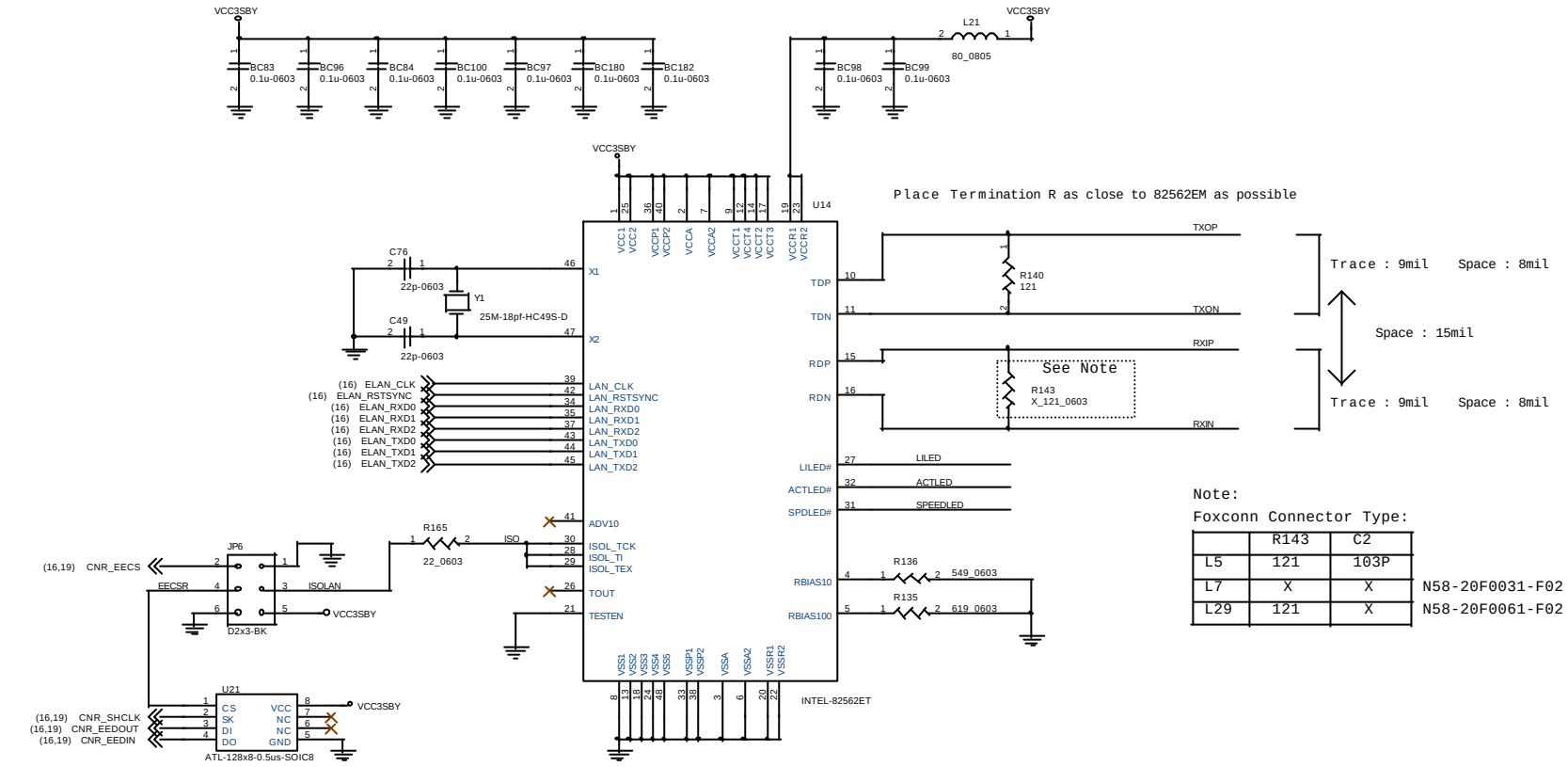

Note:
Foxconn Connector Type:

	R143	C2	
L5	121	103P	
L7	X	X	N58-20F0031-F02
L29	121	X	N58-20F0061-F02

Remark:
82562EM with 93C66:M33-93C6603-A26
82562ET with 93C46:M33-93C4613-A26 *

JP6	On board LAN
1-3,2-4	Enable
3-5,4-6	Disable

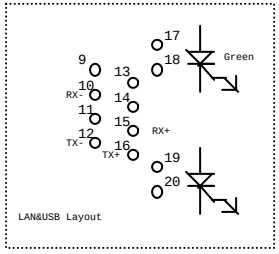

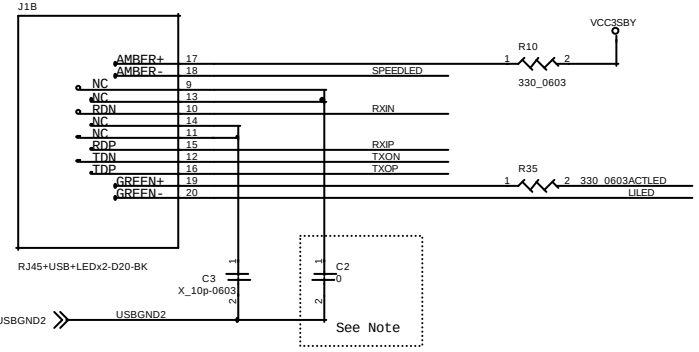

Micro-Star	Title: MS6315		Rev: 3.0B
	Document Number: LAN Connector & I562ET/M (Kinnereth / +)		
	Last Revision Date: Monday, May 07,2001	Sheet 35 of 37	

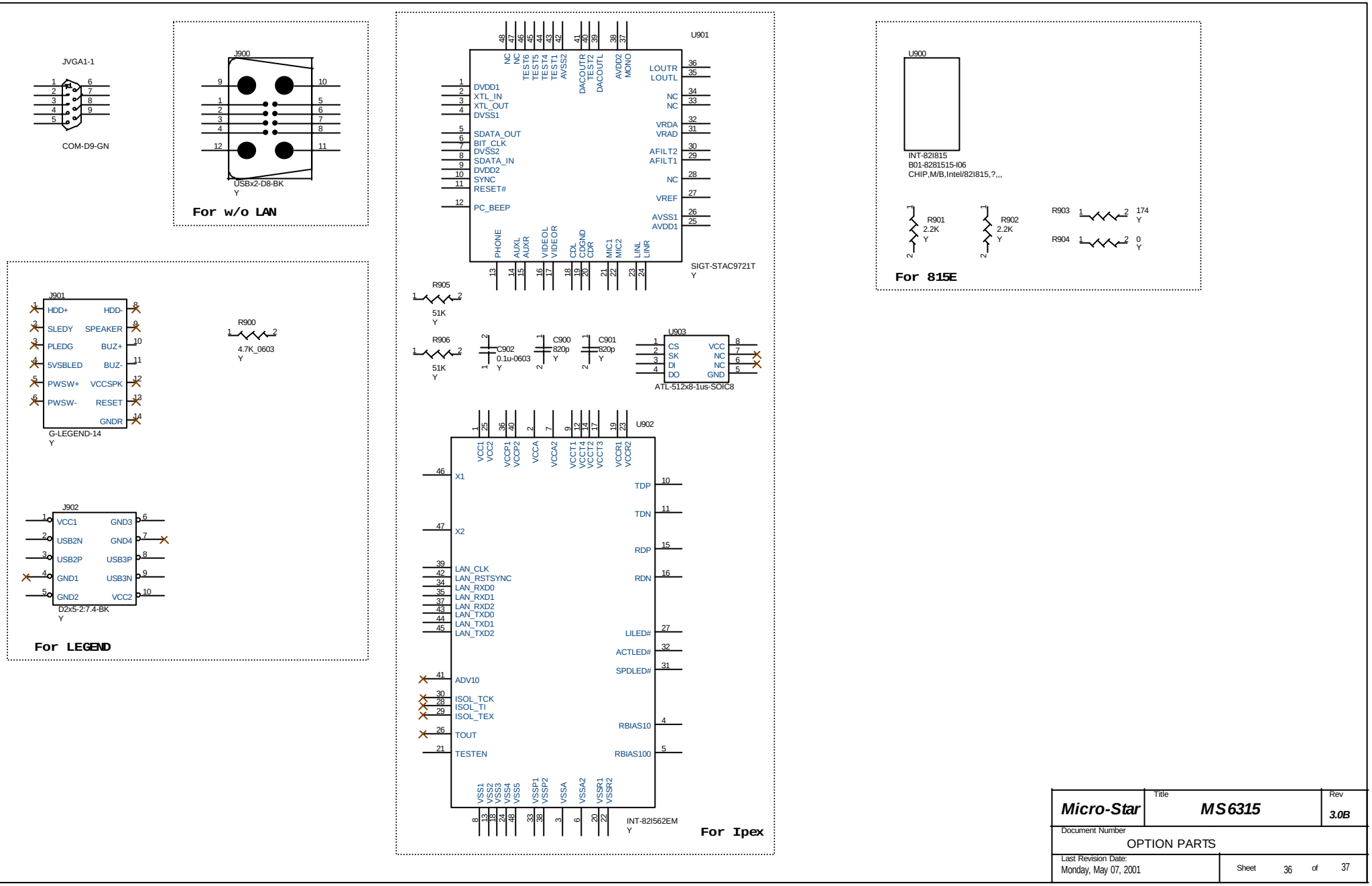
JVGA1-1
COM-D9-GN
J900
USBx2-D8-BK
Y
For w/o LAN
U901
DVDD1
XTL_IN
XTL_OUT
DVSS1
SDATA_OUT
BIT_CLK
DVSS2
SDATA_IN
DVDD2
SYNC
RESET#
PC_BEEP
LOUTR
LOUTL
NC
NC
VRDA
VRAD
AFILT2
AFILT1
NC
VREF
AVSS1
AVDD1
SIGT-STAC9721T
Y
U900
INT-82I815
B01-8281515-I06
CHIP,M/B,Intel/82I815,?,,,
R901
2.2K
Y
R902
2.2K
Y
R903
174
Y
R904
0
Y
For 815E
J901
HDD+
SLEDY
PLEDG
5VSBLED
PWSW+
PWSW-
HDD-
SPEAKER
BUZ+
BUZ-
VCCSPK
RESET
GNDR
G-LEGEND-14
Y
R900
4.7K_0603
Y
R905
51K
Y
R906
51K
Y
C902
0.1u-0603
Y
C900
820p
Y
C901
820p
Y
U903
CS
SK
DI
DO
VCC
NC
NC
GND
ATL-512x8-1us-SOIC8
J902
VCC1
USB2N
USB2P
GND1
GND2
GND3
GND4
USB3P
USB3N
VCC2
D2x5-2:7.4-BK
Y
For LEGEND
U902
X1
X2
LAN_CLK
LAN_RSTSYNC
LAN_RXD0
LAN_RXD1
LAN_RXD2
LAN_TXD0
LAN_TXD1
LAN_TXD2
ADV10
ISOL_TCK
ISOL_TI
ISOL_TEX
TOUT
TESTEN
TDP
TDN
RDP
RDN
LILED#
ACTLED#
SPDLED#
RBIAS10
RBIAS100
INT-82I562EM
Y
For Ipex
Micro-Star
MS6315
3.0B
OPTION PARTS
Monday, May 07, 2001
Sheet 36 of 37

JP1(1-2)

JC-D2-WH

JP7(1-2)

JC-D2-RD

JFP1(R)

JC-D2-GN
14-15

JP3(1)

JC-D2-GN

JP4(1-2)

JC-D2-GN

JP5(1-2)

JC-D2-GN

JBAT1(1-2)

JC-D2-RD

JP2(WW)

JC-D2x2-GN
1-2/3-4

JP6(XX)

JC-D2x2-GN
1-3/2-4

COM1

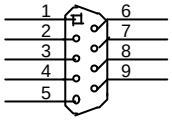

COM-D9-GN

PCB

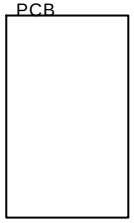

P01-631530B
PCB, M/B, 6315, 30B, 4

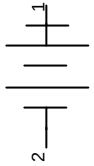

BAT2-1
BAT-CR2032-3V-210mAh

U26-1

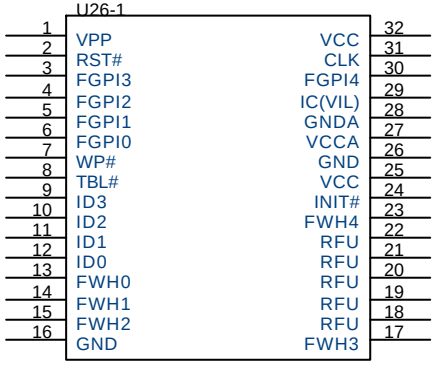

SST-256K*8-33MHz-PLCC32

AGP1-1

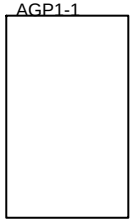

E91-0000021-H06
Mech,Retention,RetentionModule,83.2mmX18.5mm,LeftLock,ForAGPCard

Micro-Star	Title ***MS6315***	Rev ***3.0B***
Document Number MANUAL PARTS		
Last Revision Date: Monday, May 07, 2001	Sheet 37 of 37	

MS-6315 Micro-ATX

Intel PPGA 370 Processor

Intel Solano2 Chipset

Winbond 83627HF-AW LPC I/O

Creative CT5880 Controller 4-Speaker

ICH2 LAN Controller + Kinnereth Plus

Model option table

Model type	Function	Part Mark
MS6315	Stantard will be del	X_????
Option A	With/ CT5880	A_????
Option L	With/ LAN on board	L_????
Option H	With/ Hardware monitor	H_????
Option G	For Legend only	G_????

Stantard+W/LAN ,W/ HW Monitor , W/STR

Title	Page
Cover Sheet	1
Block Diagram	2
GPIO SPEC	3
370PGA Socket	4,5
GTL Termination	6
Clock Synthesizer	7
GMCH	8,9,10
AGP / AIMM Display Cache	11
Graphics Connectors	12
System Memory	13,14
ICH	15,16
FWH	17
CNR Riser	18
PCI Connectors	19,20
ATA66 Connectors	21
LPC I/O	22
Hardware monitor	23
Parallel / Serial Port	24
Keyboard/Mouse Connectors	25
PCI Audio Controllor	26
AC'97 Codec	27
Audio/Game Port	28
USB HUB & USB Connectors	29
VRM 8.4	30
Voltage Regulators	31
Front Panel	32
Pull-up Resistors	33
LAN	34
History	

Block Diagram

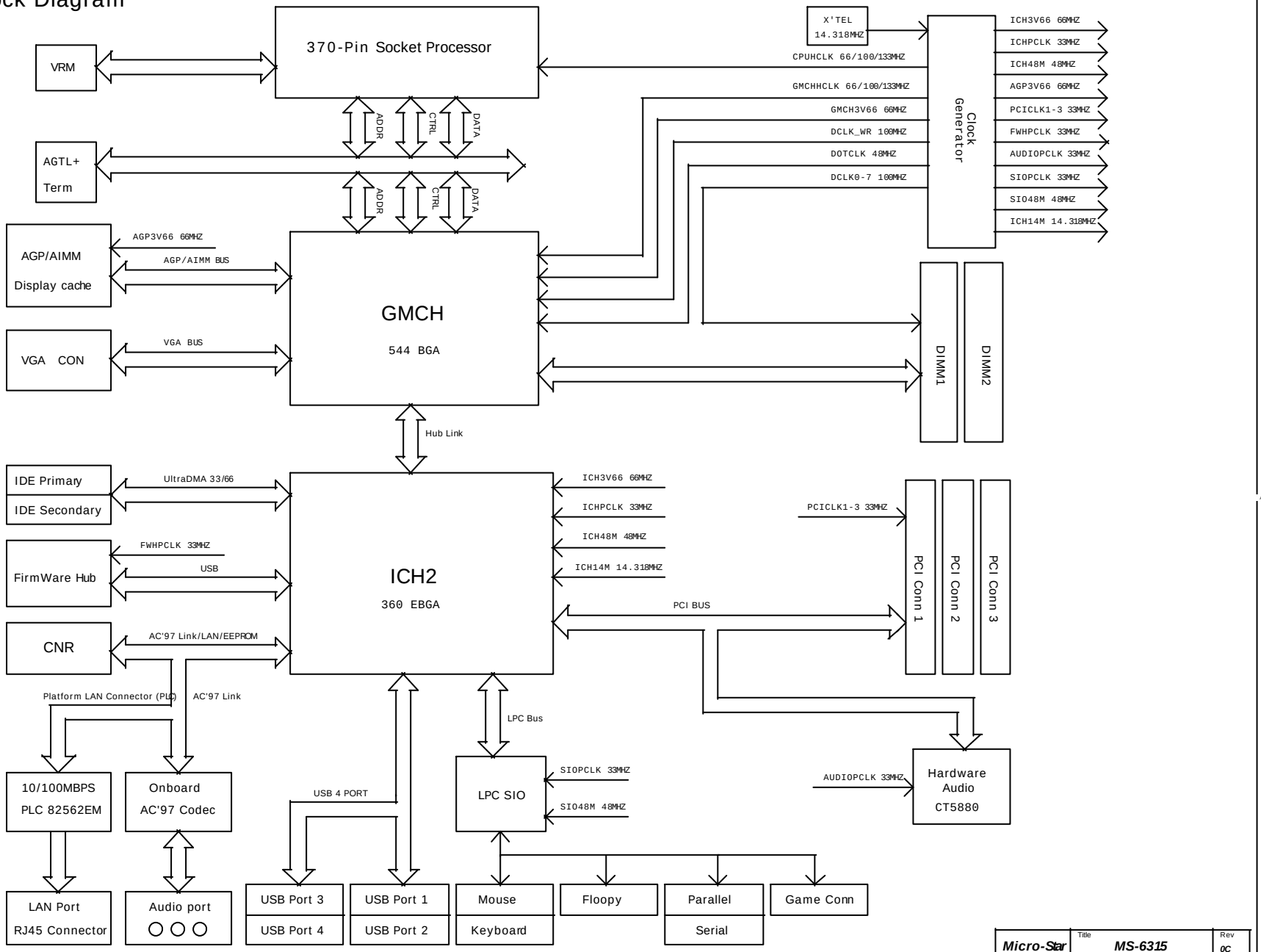

Micro-Star	Title: MS-6315	Rev: 0C
Document Number: Block Diagram		
Last Revision Date: Tuesday, August 01, 2000	Sheet 2 of 34	

General Purpose I/O Spec.

ICH

GPIO Pin	Type	Function
GPIO 0	I	Pull up (REQ#A)
GPIO 1	I	PREQ#5
GPIO 2~4	I	NC
GPIO 5	I	NC
GPIO 6	I	NC
GPIO 7	I	NC
GPIO 8	I	LAN Wake Up
GPIO 9	I	Not Implemented
GPIO 10	I	Not Implemented
GPIO 11	I	SMB_ALERT
GPIO 12	I	External SMI
GPIO 13	I	LPC PME
GPIO 14~15	I	Not Implemented
GPIO 16	O	Pull up(GNT#A)
GPIO 17	O	PGNT#5
GPIO 18~20	O	NC
GPIO 21	O	FAN Ctrl
GPIO 22	O	Pullup
GPIO 23	OD	BIOS update lock(H)/unlock(L)
GPIO 24	O	NC
GPIO 25	O	NC
GPIO 26	O	Not Implemented
GPIO 27	I/O	NC
GPIO 28	I/O	NC
GPIO 29~31	I/O	Not Implemented

FWH

GPIO Pin	Type	Function
GPI 0	I	ATA IDE 1 Detect
GPI 1	I	ATA IDE 2 Detect
GPI 2	I	GPI2=L GPI3=H Flash from FDD
GPI 3	I	GPI2=H GPI3=L Boot Auto clear CMOS

ICH2 SMLINK0,1 Connect to PCI2 for PCI card AOL

PCI Config.

DEVICE	ICH INT Pin	IDSEL
PCI Slot 1	INTA# INTB# INTC# INTD#	AD16
PCI Slot 2	INTB# INTC# INTD# INTA#	AD17
PCI Slot 3	INTC# INTD# INTA# INTB#	AD18
CT5880	INTC#	AD26

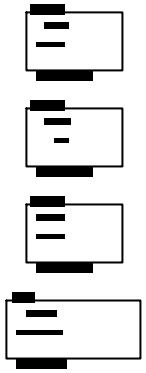

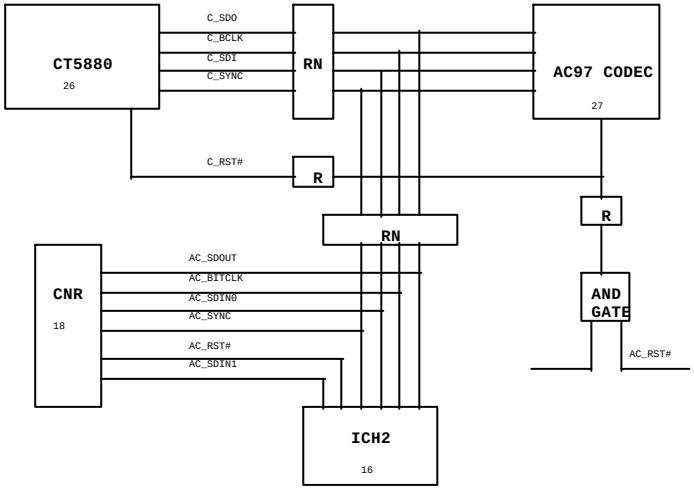

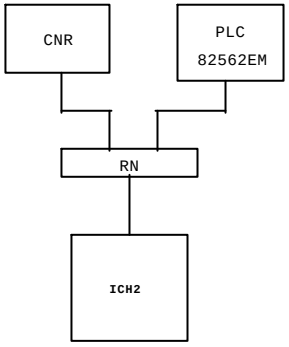

Micro-Star	MS-6315	100
BIOS GPIO SPEC.		
Tuesday, August 01, 2000	3	34

370PGA Socket Part 1

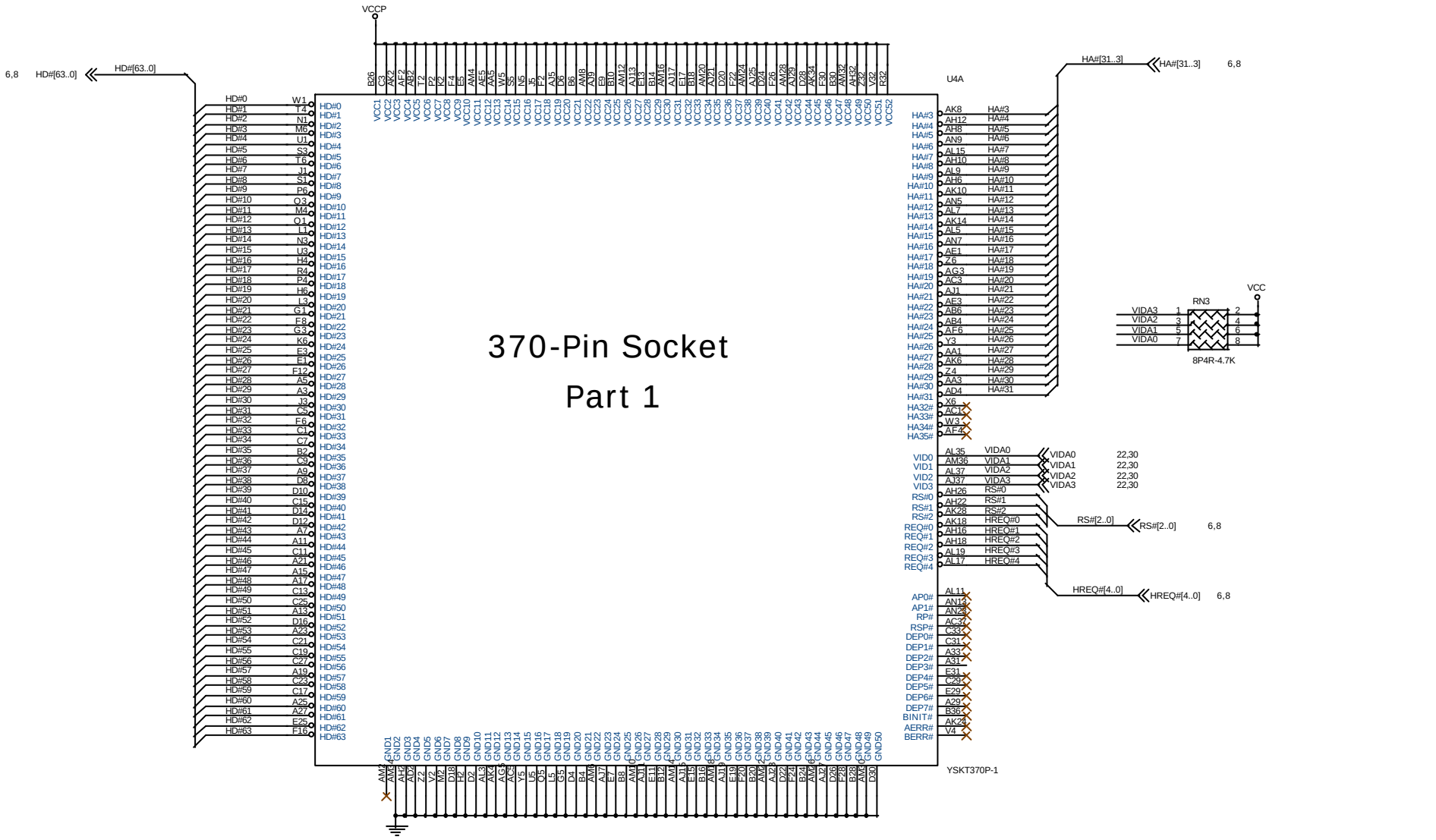

Micro-Star	Title: MS-6315		Rev: 100
Document Number: SOCKET 370 PGA-1			
Last Revision Date: Tuesday, August 01, 2000		Sheet 4 of 34	

370PGA Socket Part 2

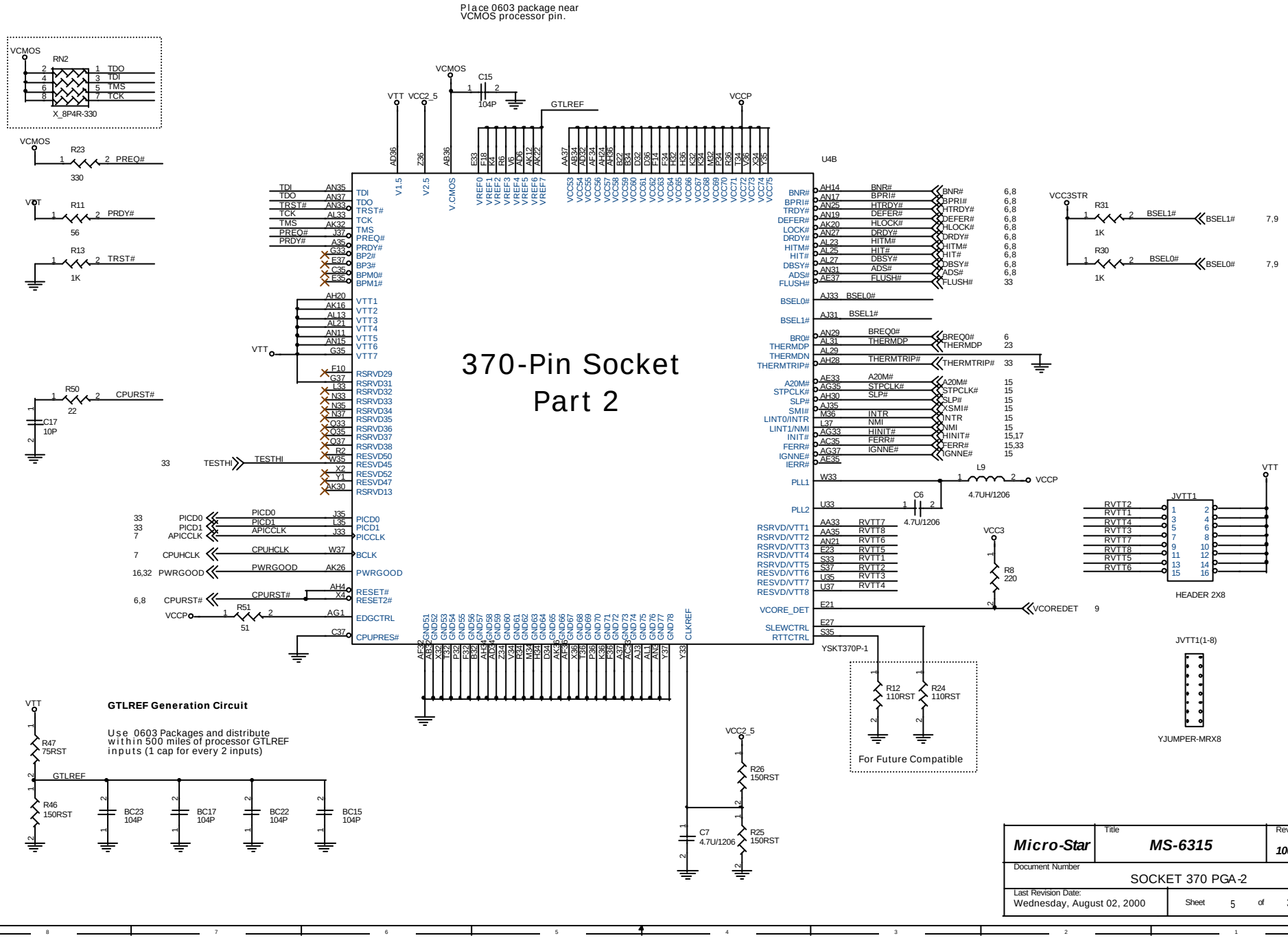

GTL Termination

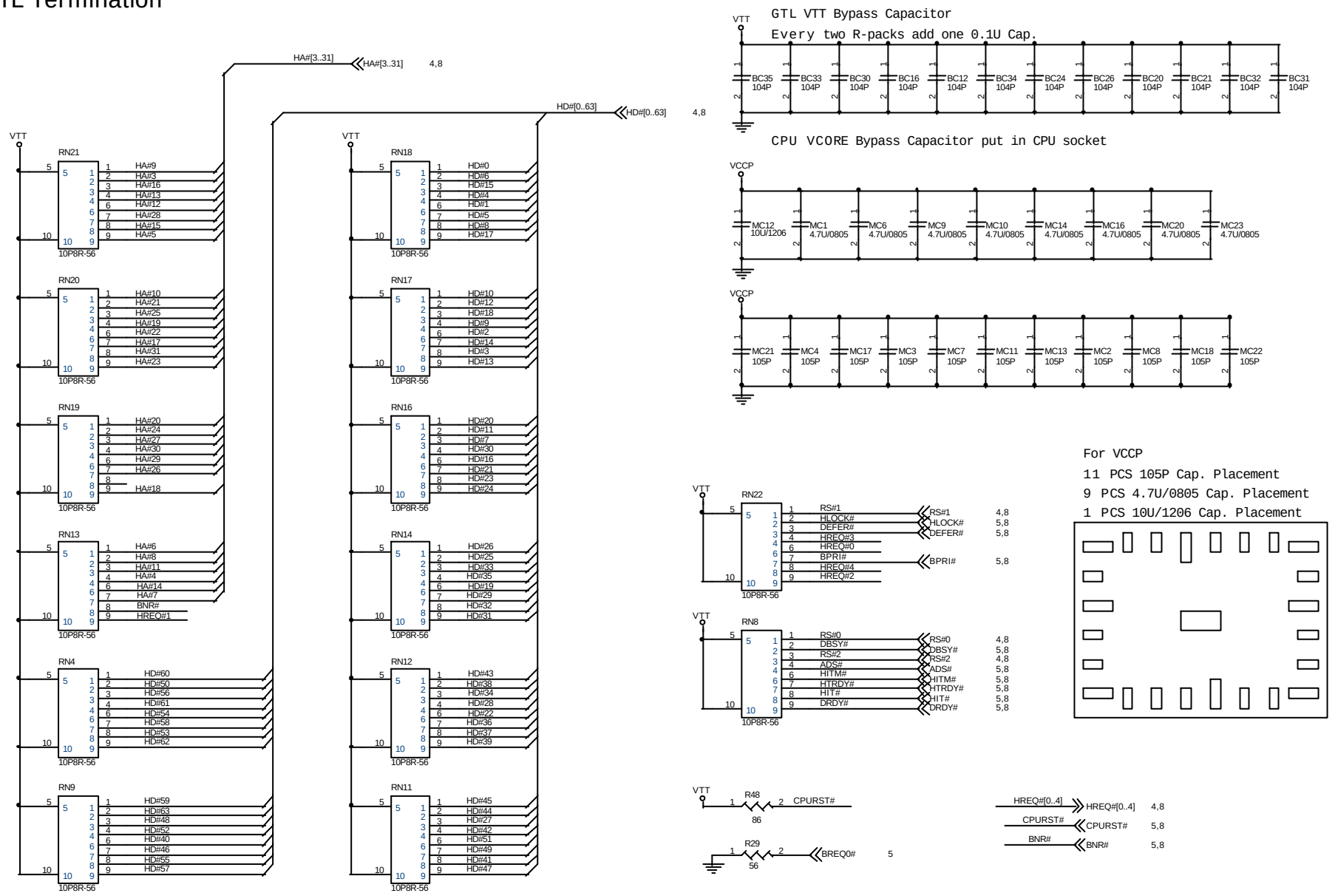

For VCCP
11 PCS 105P Cap. Placement
9 PCS 4.7U/0805 Cap. Placement
1 PCS 10U/1206 Cap. Placement

Micro-Star	Title: MS-6315	Rev: 100
Document Number: GTL Termination		
Last Revision Date: Tuesday, August 01, 2000	Sheet 6 of 34	

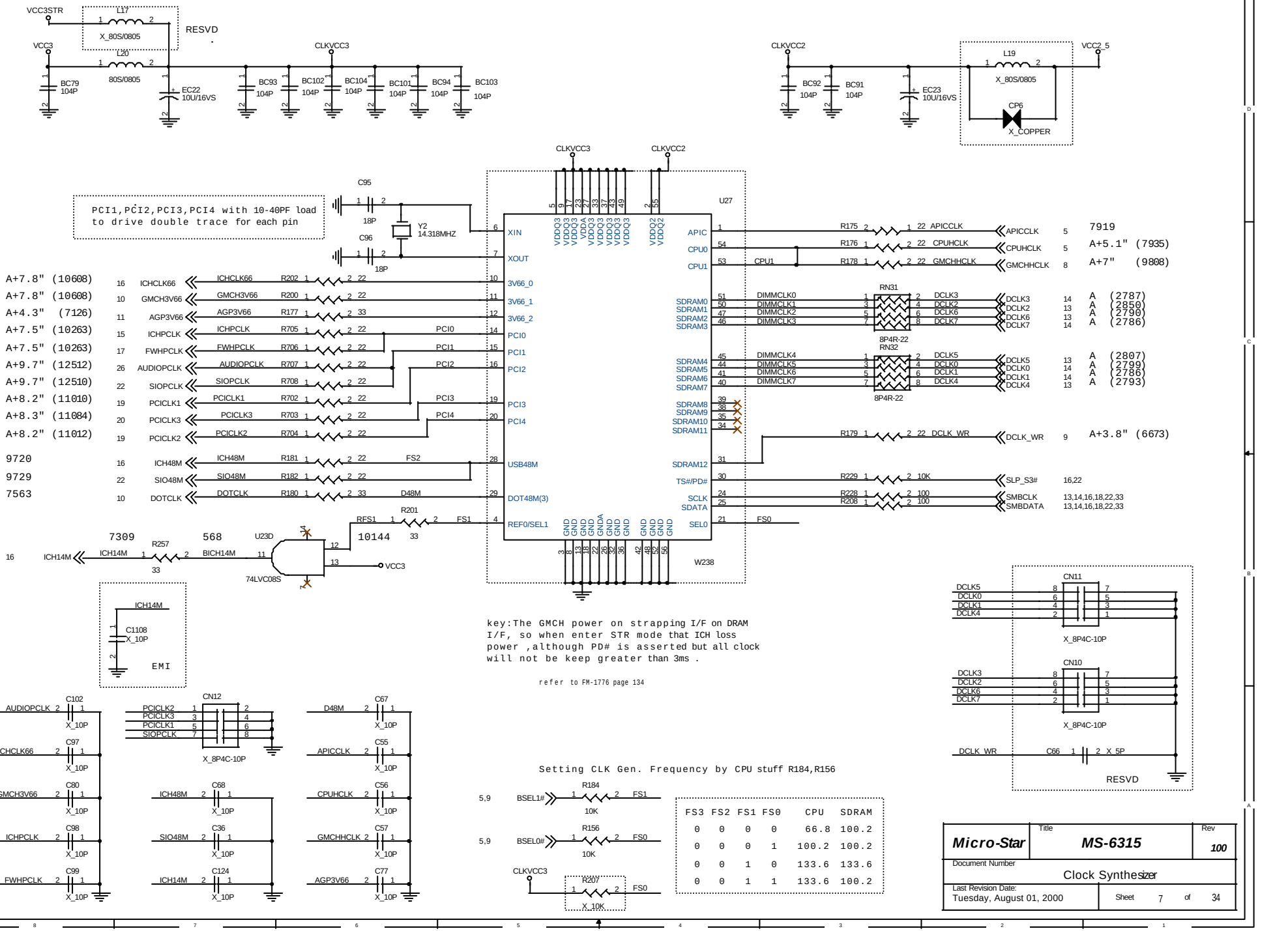
VCC3STR
L17
X_80S/0805
RESVD
VCC3
L20
80S/0805
BC79 104P
EC22 10U/16VS
CLKVCC3
BC93 104P
BC102 104P
BC104 104P
BC101 104P
BC94 104P
BC103 104P
CLKVCC2
BC92 104P
BC91 104P
EC23 10U/16VS
L19
X_80S/0805
VCC2_5
CP6
X_COPPER
PCI1,PCI2,PCI3,PCI4 with 10-40PF load to drive double trace for each pin
C95
18P
Y2
14.318MHZ
C96
18P
U27
XIN
XOUT
3V66_0
3V66_1
3V66_2
PCI0
PCI1
PCI2
PCI3
PCI4
USB48M
DOT48M(3)
REF0/SEL1
APIC
CPU0
CPU1
SDRAM0
SDRAM1
SDRAM2
SDRAM3
SDRAM4
SDRAM5
SDRAM6
SDRAM7
SDRAM8
SDRAM9
SDRAM10
SDRAM11
SDRAM12
TS#/PD#
SCLK
SDATA
SEL0
W238
A+7.8" (10608)
A+7.8" (10608)
A+4.3" (7126)
A+7.5" (10263)
A+7.5" (10263)
A+9.7" (12512)
A+9.7" (12510)
A+8.2" (11010)
A+8.3" (11084)
A+8.2" (11012)
9720
9729
7563
ICHCLK66
GMCH3V66
AGP3V66
ICHPCLK
FWHPCLK
AUDIOPCLK
SIOPCLK
PCICLK1
PCICLK3
PCICLK2
ICH48M
SIO48M
DOTCLK
R202 22
R200 22
R177 33
R705 22
R706 22
R707 22
R708 22
R702 22
R703 22
R704 22
R181 22
R182 22
R180 33
FS2
D48M
FS1
R201 33
RFS1
10144
7309
568
U23D
74LVC08S
R257 33
ICH14M
BICH14M
VCC3
APICCLK
CPUHCLK
GMCHHCLK
R175 22
R176 22
R178 22
RN31
8P4R-22
RN32
8P4R-22
DIMMCLK0
DIMMCLK1
DIMMCLK2
DIMMCLK3
DIMMCLK4
DIMMCLK5
DIMMCLK6
DIMMCLK7
DCLK3
DCLK2
DCLK6
DCLK7
DCLK5
DCLK0
DCLK1
DCLK4
R179 22
DCLK_WR
R229 10K
SLP_S3#
R228 100
R208 100
SMBCLK
SMBDATA
7919
A+5.1" (7935)
A+7" (9808)
A (2787)
A (2850)
A (2790)
A (2786)
A (2807)
A (2799)
A (2786)
A (2793)
A+3.8" (6673)
16,22
13,14,16,18,22,33
13,14,16,18,22,33
key:The GMCH power on strapping I/F on DRAM I/F, so when enter STR mode that ICH loss power ,although PD# is asserted but all clock will not be keep greater than 3ms .
refer to FM-1776 page 134
ICH14M
C1108 X_10P
EMI
CN12
X_8P4C-10P
CN11
X_8P4C-10P
CN10
X_8P4C-10P
C66 X_5P
RESVD
C102 X_10P
C97 X_10P
C80 X_10P
C98 X_10P
C99 X_10P
C68 X_10P
C36 X_10P
C124 X_10P
C67 X_10P
C55 X_10P
C56 X_10P
C57 X_10P
C77 X_10P
Setting CLK Gen. Frequency by CPU stuff R184,R156
BSEL1#
BSEL0#
R184 10K
R156 10K
R207 X_10K
FS3 FS2 FS1 FS0 CPU SDRAM
0 0 0 0 66.8 100.2
0 0 0 1 100.2 100.2
0 0 1 0 133.6 133.6
0 0 1 1 133.6 100.2
Micro-Star
Title
MS-6315
Rev
100
Document Number
Clock Synthesizer
Last Revision Date:
Tuesday, August 01, 2000
Sheet 7 of 34

82815, PART 1 : HOST INTERFACE

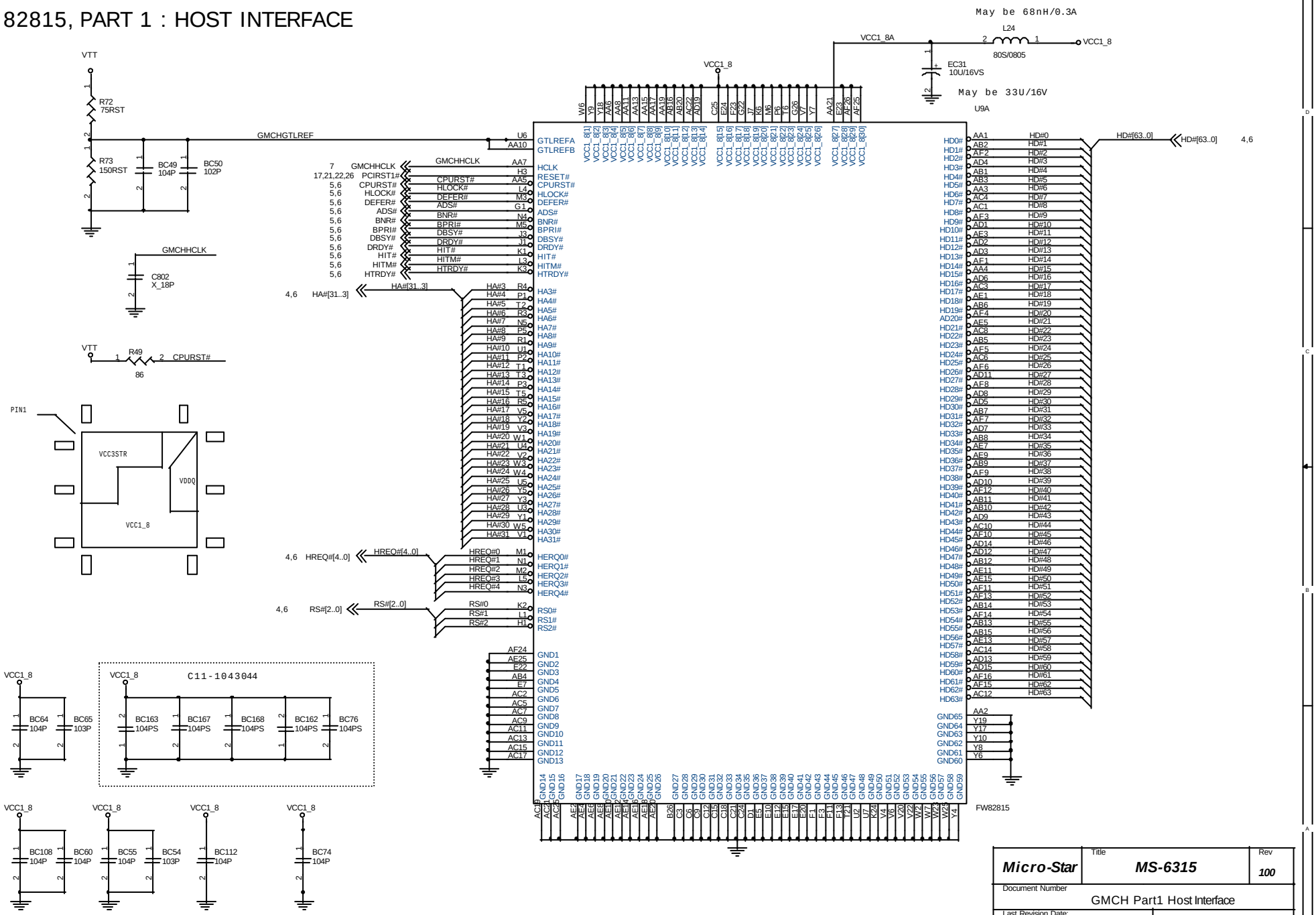

Micro-Star	Title: MS-6315		Rev: 100
Document Number: GMCH Part1 Host Interface			
Last Revision Date: Tuesday, August 01, 2000		Sheet 8 of 34	

GMCH, PART 2 : SYSTEM MEMORY

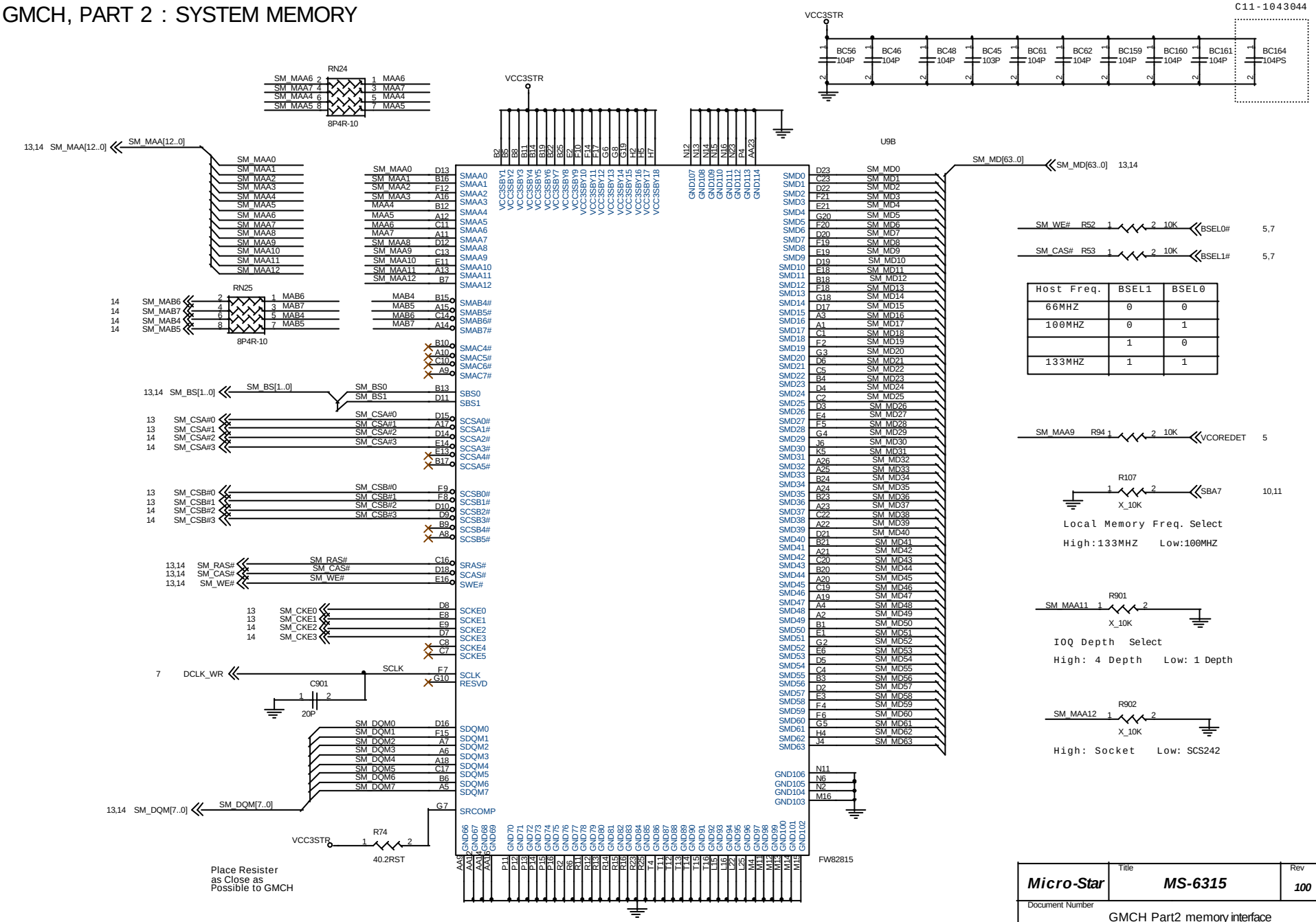

GMCH PART 3 : AGP & VIDEO Interface & HUB link

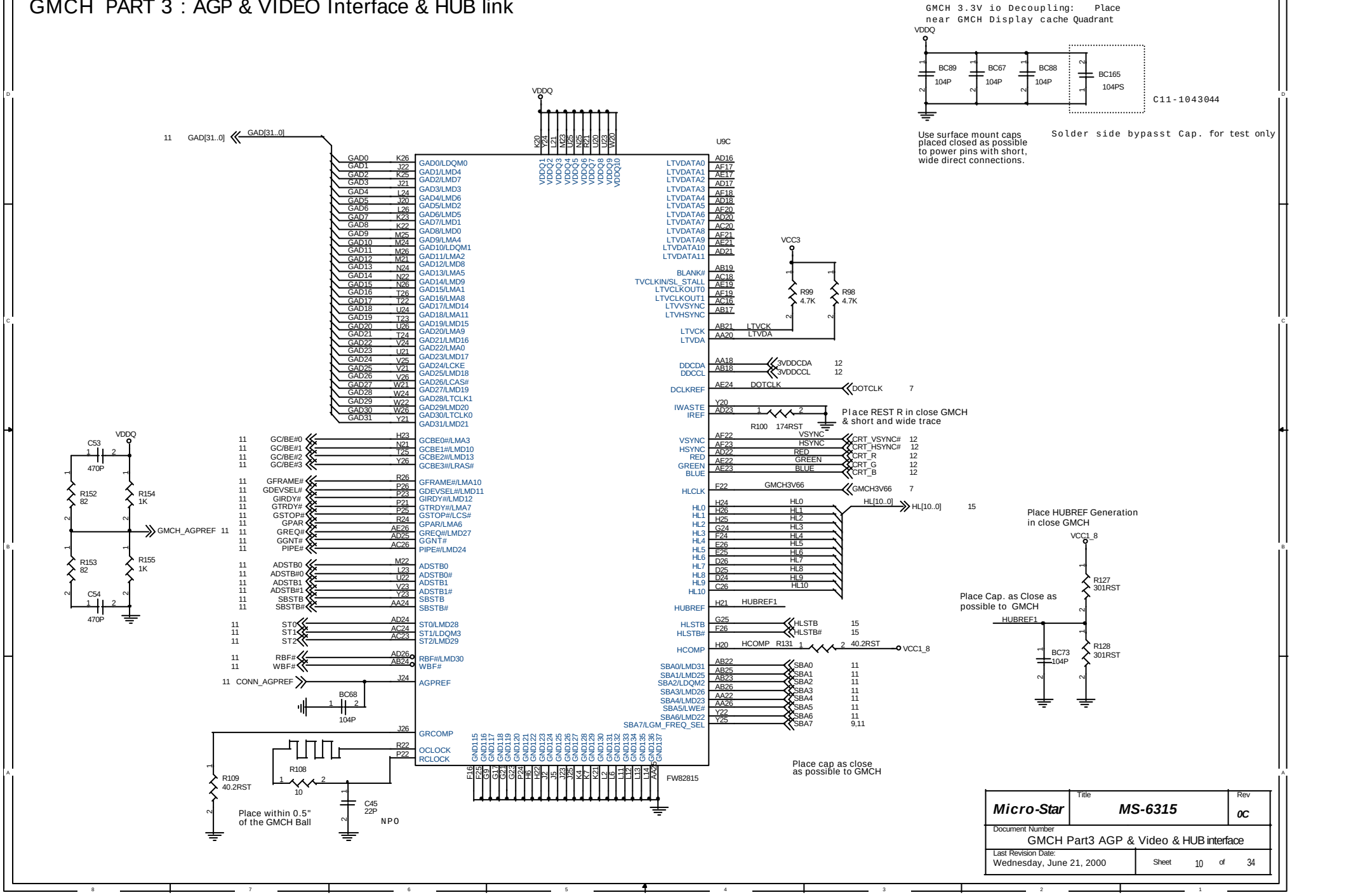

Micro-Star	Title: MS-6315		Rev: 0C
Document Number: GMCH Part3 AGP & Video & HUB interface			
Last Revision Date: Wednesday, June 21, 2000		Sheet 10 of 34	

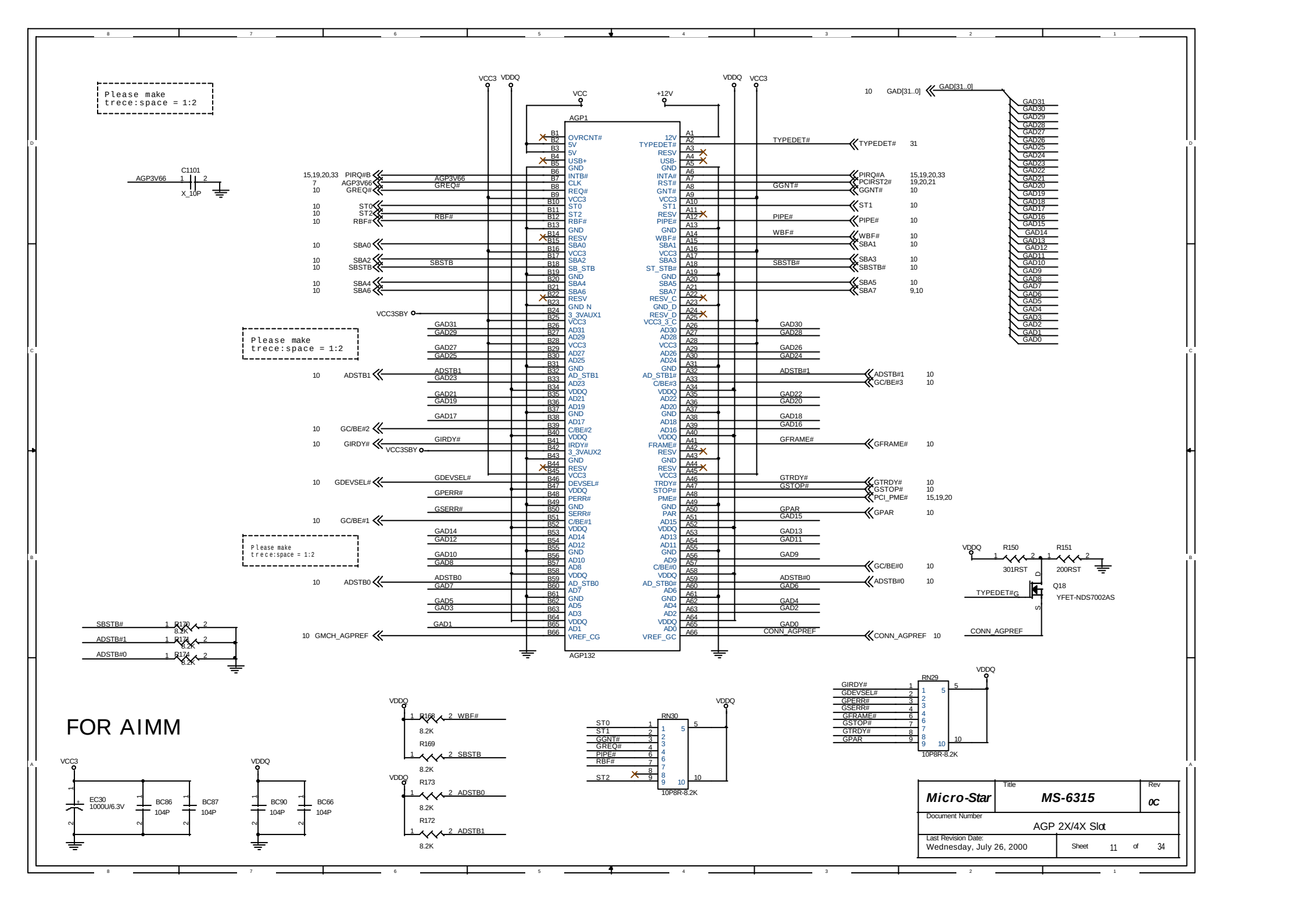

Micro-Star	Title: MS-6315		Rev: 0C
Document Number: AGP 2X/4X Slot			
Last Revision Date: Wednesday, July 26, 2000		Sheet 11 of 34	

Video Connector

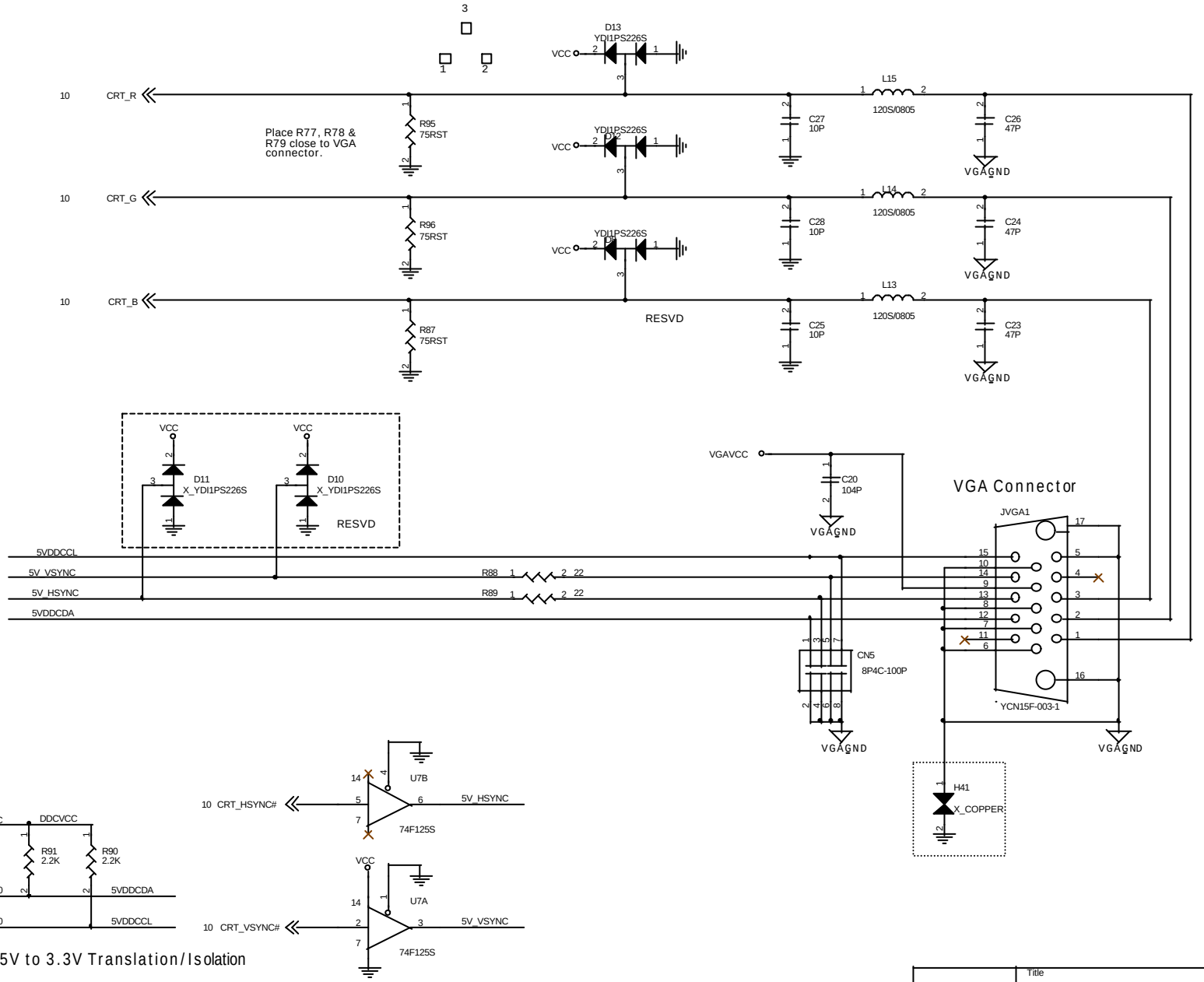

5V to 3.3V Translation/Isolation

Micro-Star	Title: MS-6315		Rev: 0C
Document Number: Video Connector			
Last Revision Date: Thursday, June 22, 2000		Sheet 12 of 34	

DIMM1

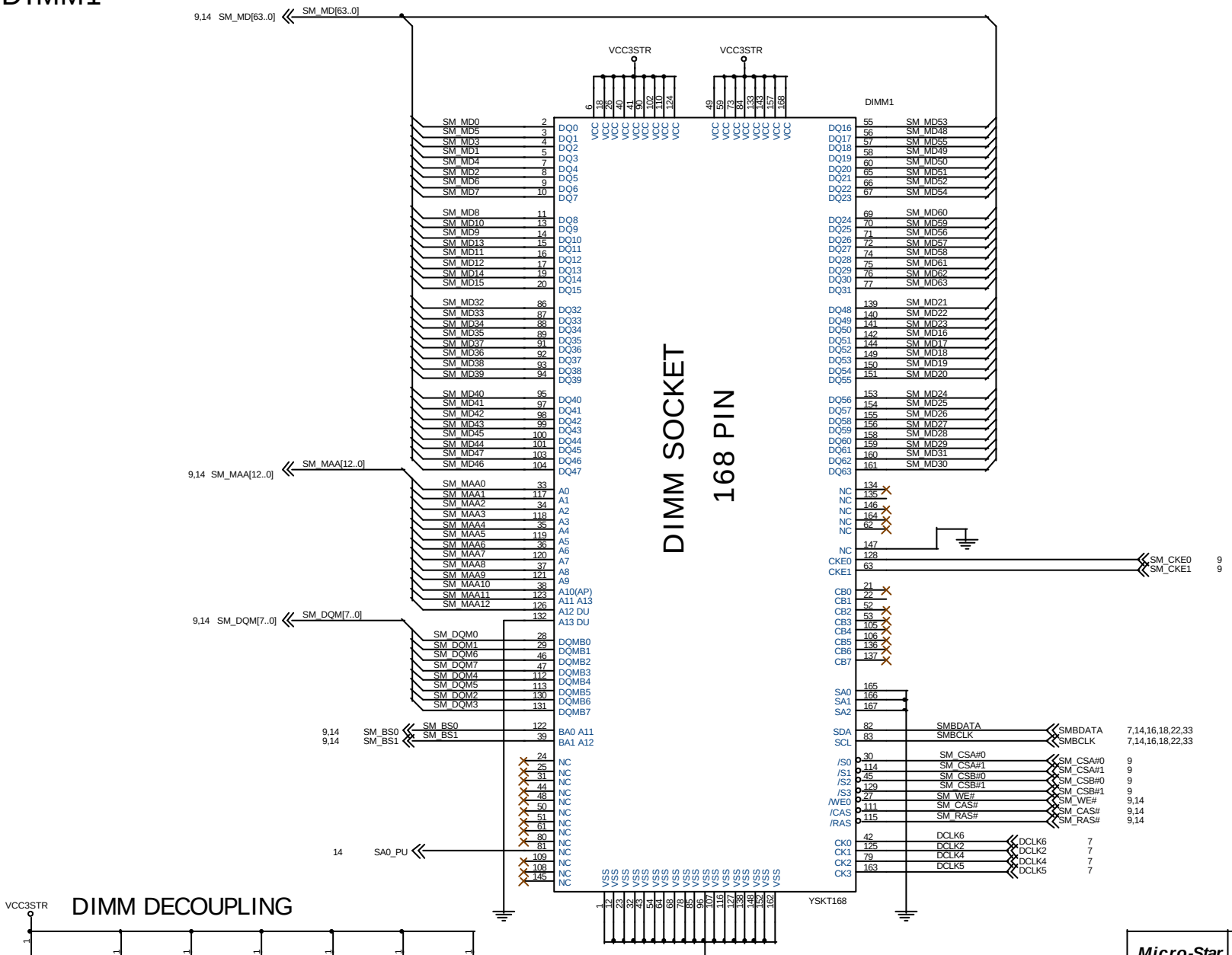

DIMM DECOUPLING

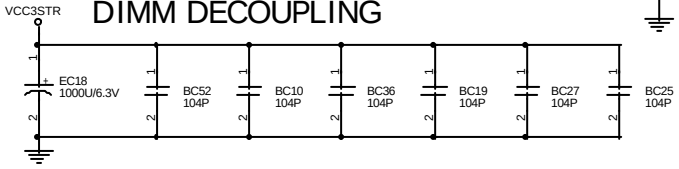

Micro-Star	Title: MS-6315	Rev: 0C
Document Number: System Memory: DIMM1		
Last Revision Date: Wednesday, June 21, 2000	Sheet 13 of 34	

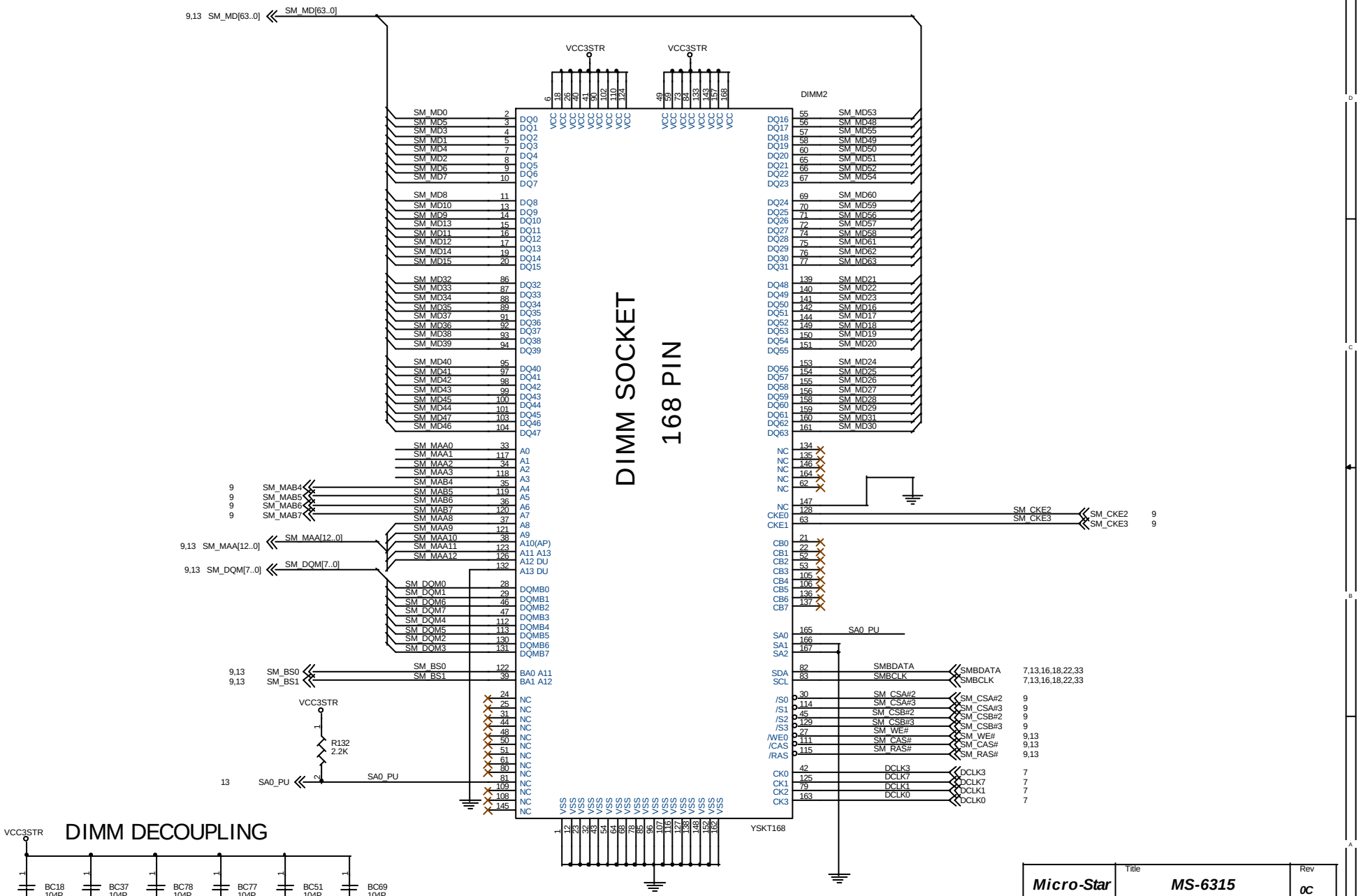
DIMM SOCKET
168 PIN
DIMM2
YSKT168
VCC3STR
SM_MD[63..0]
SM_MAA[12..0]
SM_DQM[7..0]
SM_MAB4
SM_MAB5
SM_MAB6
SM_MAB7
SM_BS0
SM_BS1
SA0_PU
R132
2.2K
SMBDATA
SMBCLK
SM_CKE2
SM_CKE3
SM_CSA#2
SM_CSA#3
SM_CSB#2
SM_CSB#3
SM_WE#
SM_CAS#
SM_RAS#
DCLK3
DCLK7
DCLK1
DCLK0
DIMM DECOUPLING
BC18 104P
BC37 104P
BC78 104P
BC77 104P
BC51 104P
BC69 104P
Micro-Star
MS-6315
0C
System Memory: DIMM2
Wednesday, June 21, 2000
Sheet 14 of 34

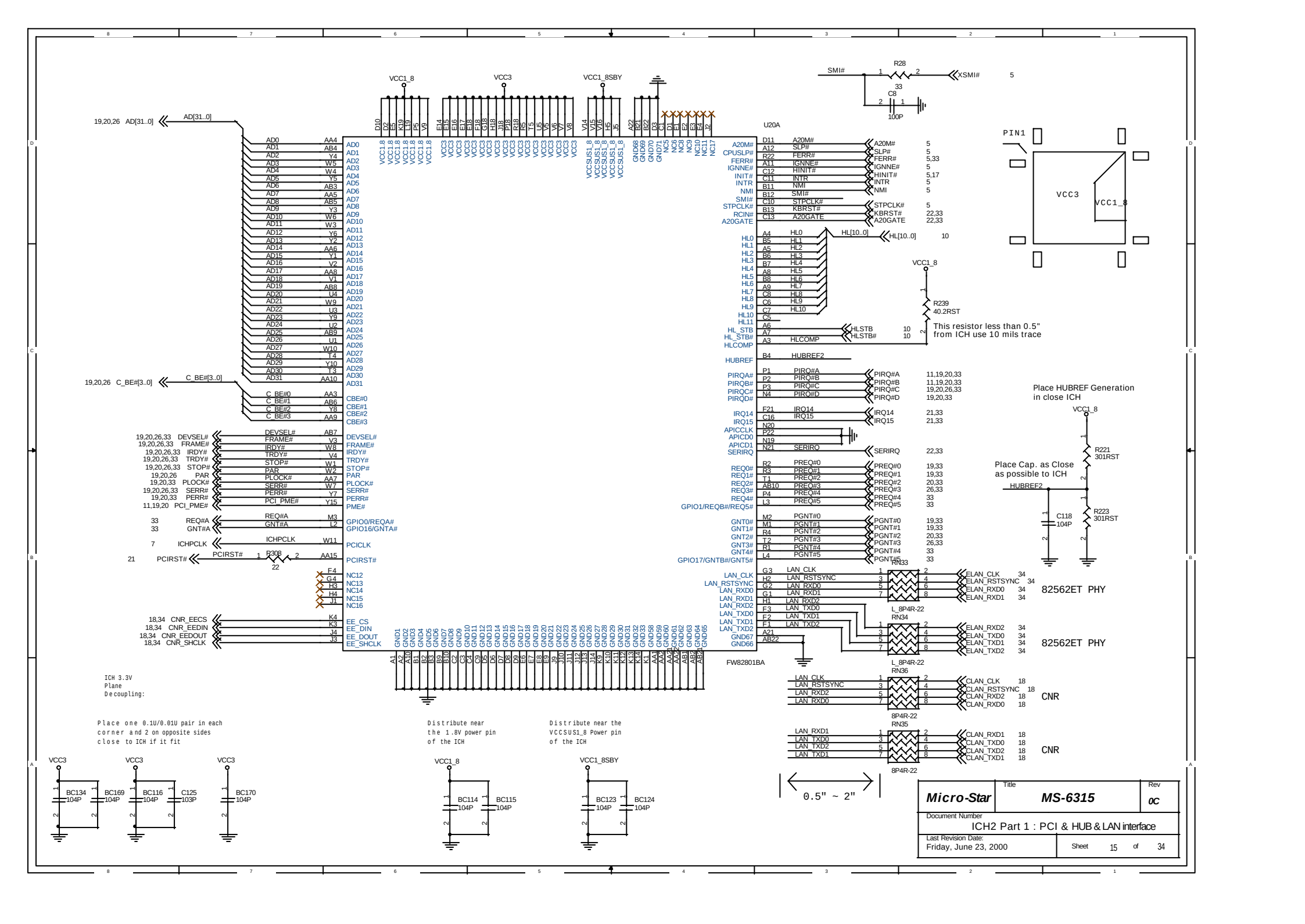
U20A
FW82801BA
VCC1_8
VCC3
VCC1_8SBY
SMI#
R28
33
C8
100P
XSMI#
PIN1
R239
40.2RST
This resistor less than 0.5" from ICH use 10 mils trace
Place HUBREF Generation in close ICH
Place Cap. as Close as possible to ICH
R221
301RST
R223
301RST
C118
104P
HUBREF2
82562ET PHY
82562ET PHY
CNR
CNR
RN33
RN34
RN36
RN35
L_8P4R-22
8P4R-22
PCIRST#
R308
22
ICH 3.3V Plane Decoupling:
Place one 0.1U/0.01U pair in each corner and 2 on opposite sides close to ICH if it fit
Distribute near the 1.8V power pin of the ICH
Distribute near the VCCSUS1_8 Power pin of the ICH
BC134 104P
BC169 104P
BC116 104P
C125 103P
BC170 104P
BC114 104P
BC115 104P
BC123 104P
BC124 104P
0.5" ~ 2"
Micro-Star
MS-6315
0C
ICH2 Part 1 : PCI & HUB & LAN interface
Friday, June 23, 2000
Sheet 15 of 34

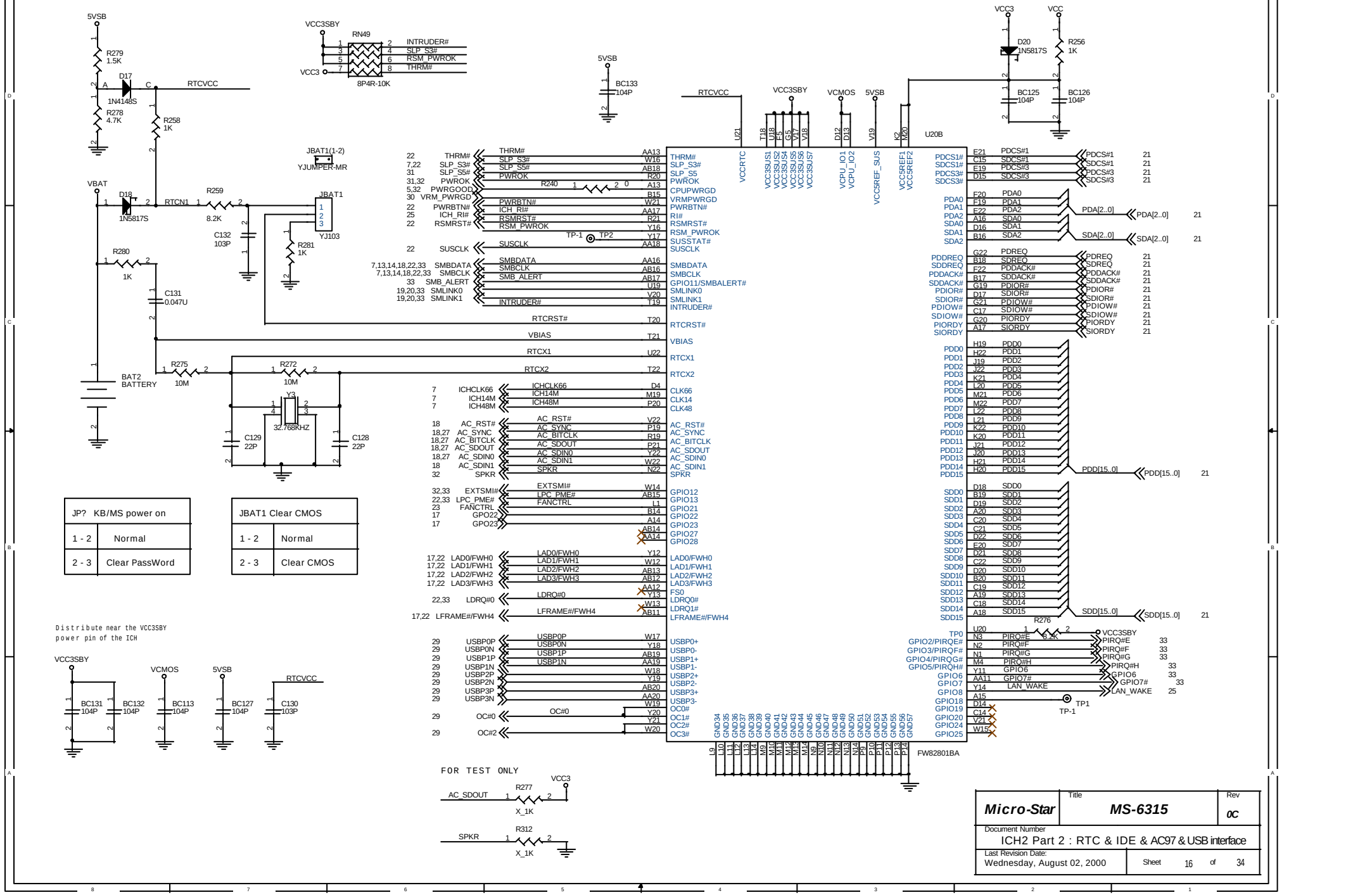

Micro-Star	Title: MS-6315
	Rev: 0C
Document Number	ICH2 Part 2 : RTC & IDE & AC97 & USB interface
Last Revision Date: Wednesday, August 02, 2000	Sheet 16 of 34

Firware Hub (FWH)

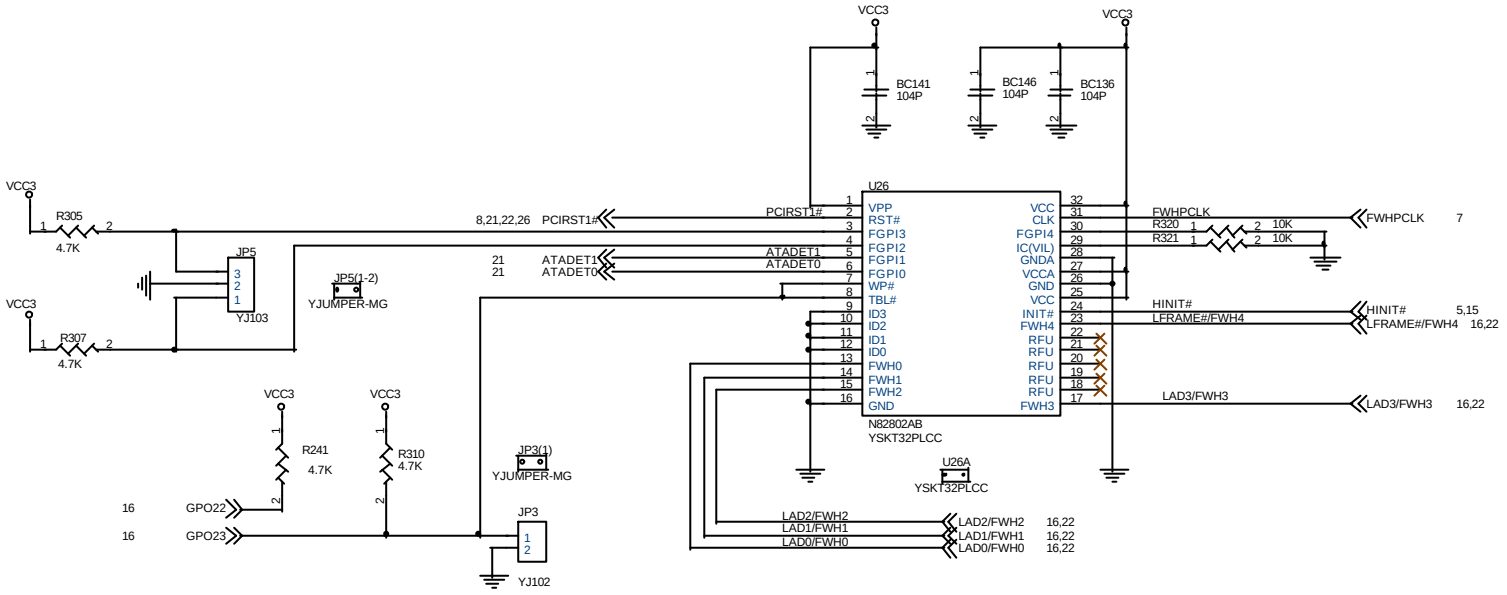

JP5 BIOS Update Configuration	
1 - 2	Normal Mode
2 - 3	Boot auto clear CMOS
OPEN	Flash from FDD

*

JP3 BIOS Update	
SHORT	Locked
OPEN	Unlocked

Micro-Star	Title: MS-6315	Rev: 0C
Document Number: Firware HUB (FWH)		
Last Revision Date: Wednesday, June 21, 2000	Sheet 17 of 34	

CNR RISER

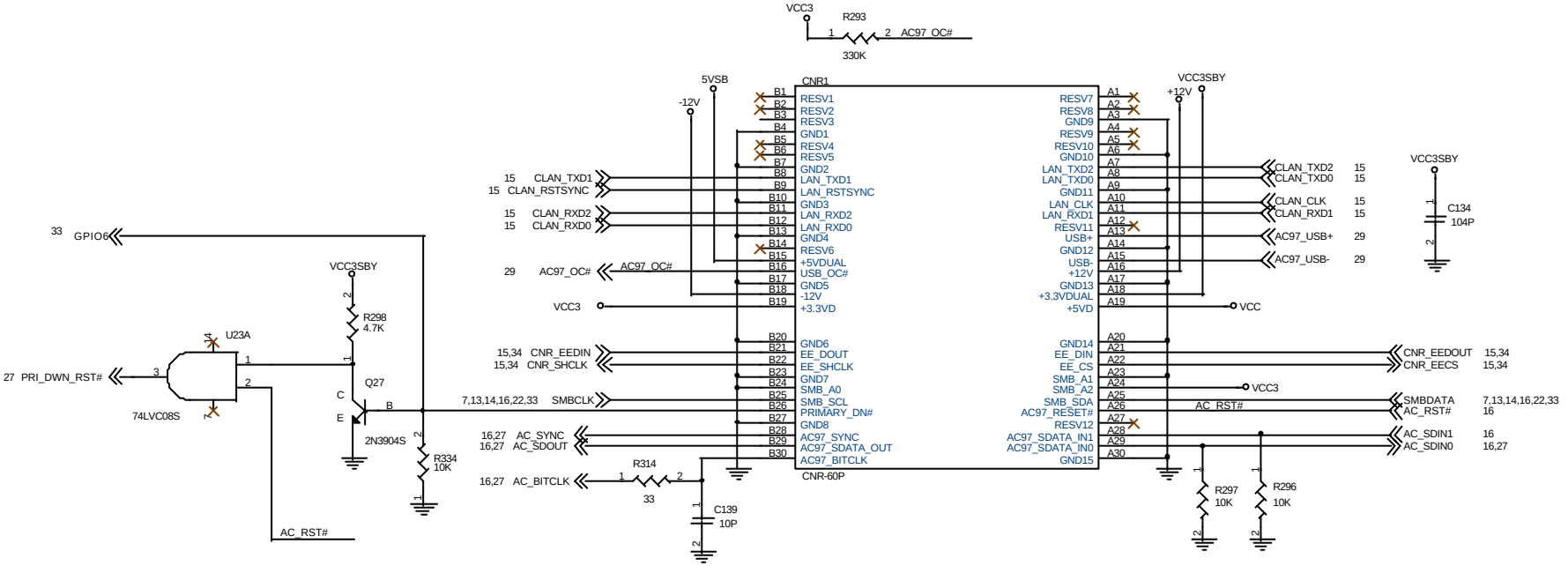

JP4	AUDIO DOWN
1 - 2	Enable onboard audio codec
2 - 3	Disable onboard audio codec

Micro-Star	Title: MS-6315	Rev: 0C
Document Number: CNR Slot		
Last Revision Date: Tuesday, August 01, 2000	Sheet 18 of 34	

PCI Connectors

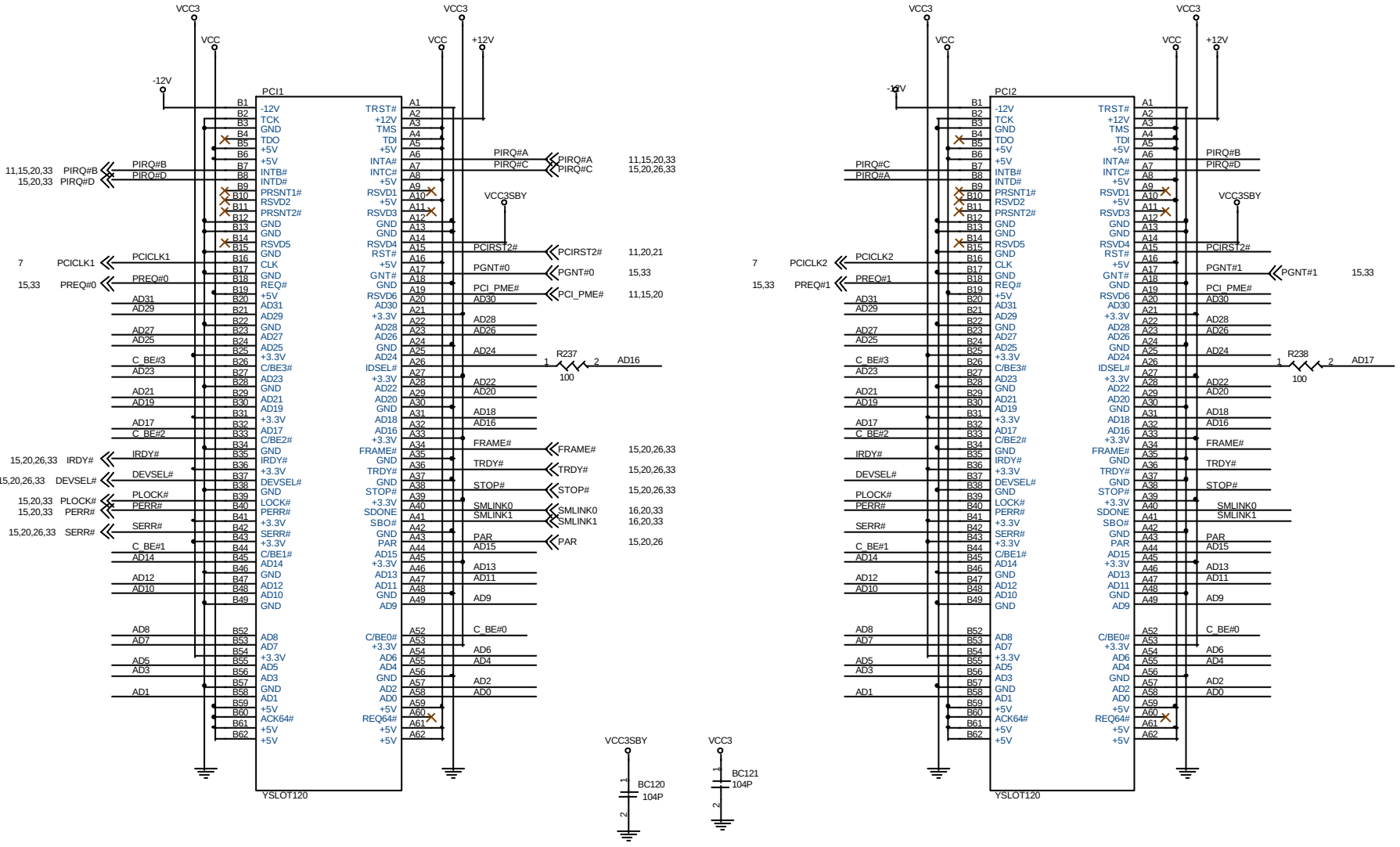

15,20,26 AD[31..0] ← AD[31..0]

15,20,26 C_BE#[3..0] ← C_BE#[3..0]

Micro-Star	Title: MS-6315	Rev: 0C
Document Number: PCI Slot 1 & 2		
Last Revision Date: Friday, June 23, 2000	Sheet 19 of 34	

PCI Slot

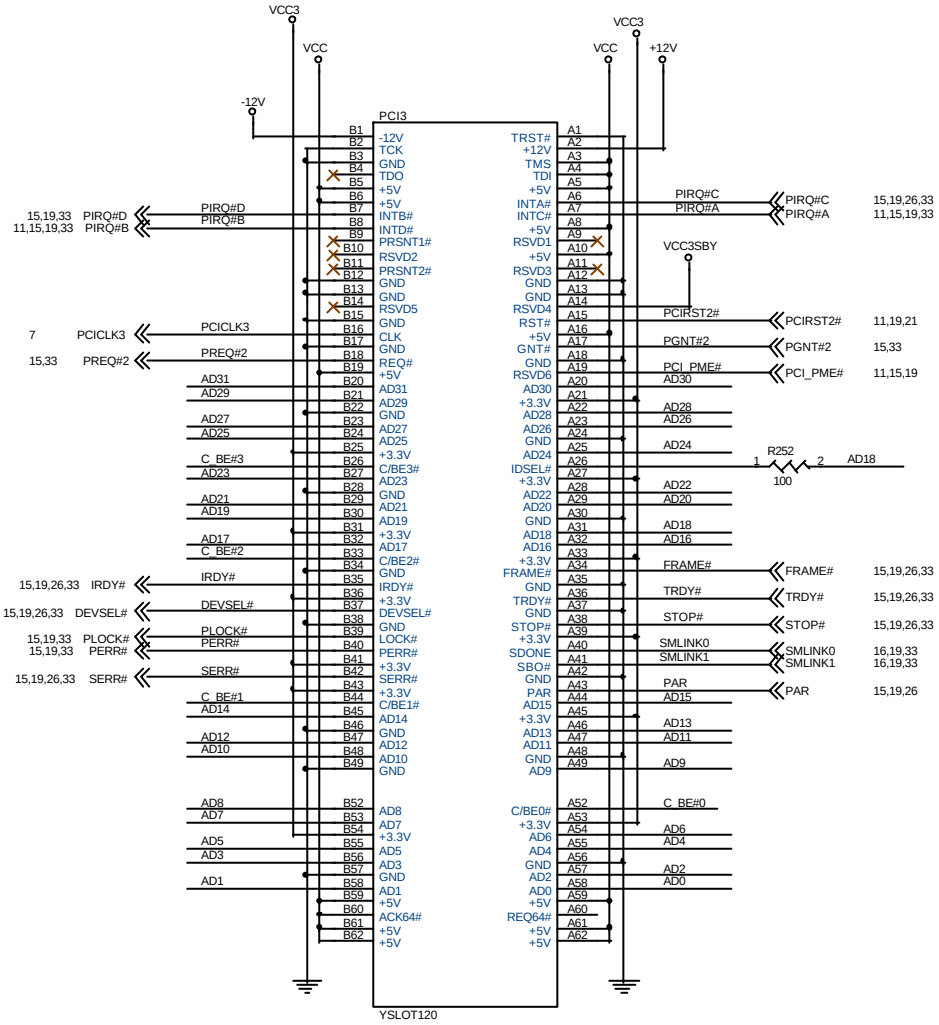

15,19,26 AD[31..0] AD[31..0]

15,19,26 C_BE#[3..0] C_BE#[3..0]

Micro-Star	Title: MS-6315	Rev: 0C
Document Number: PCI Slot 3		
Last Revision Date: Wednesday, June 21, 2000	Sheet 20 of 34	

ATA66 IDE CONNECTORS

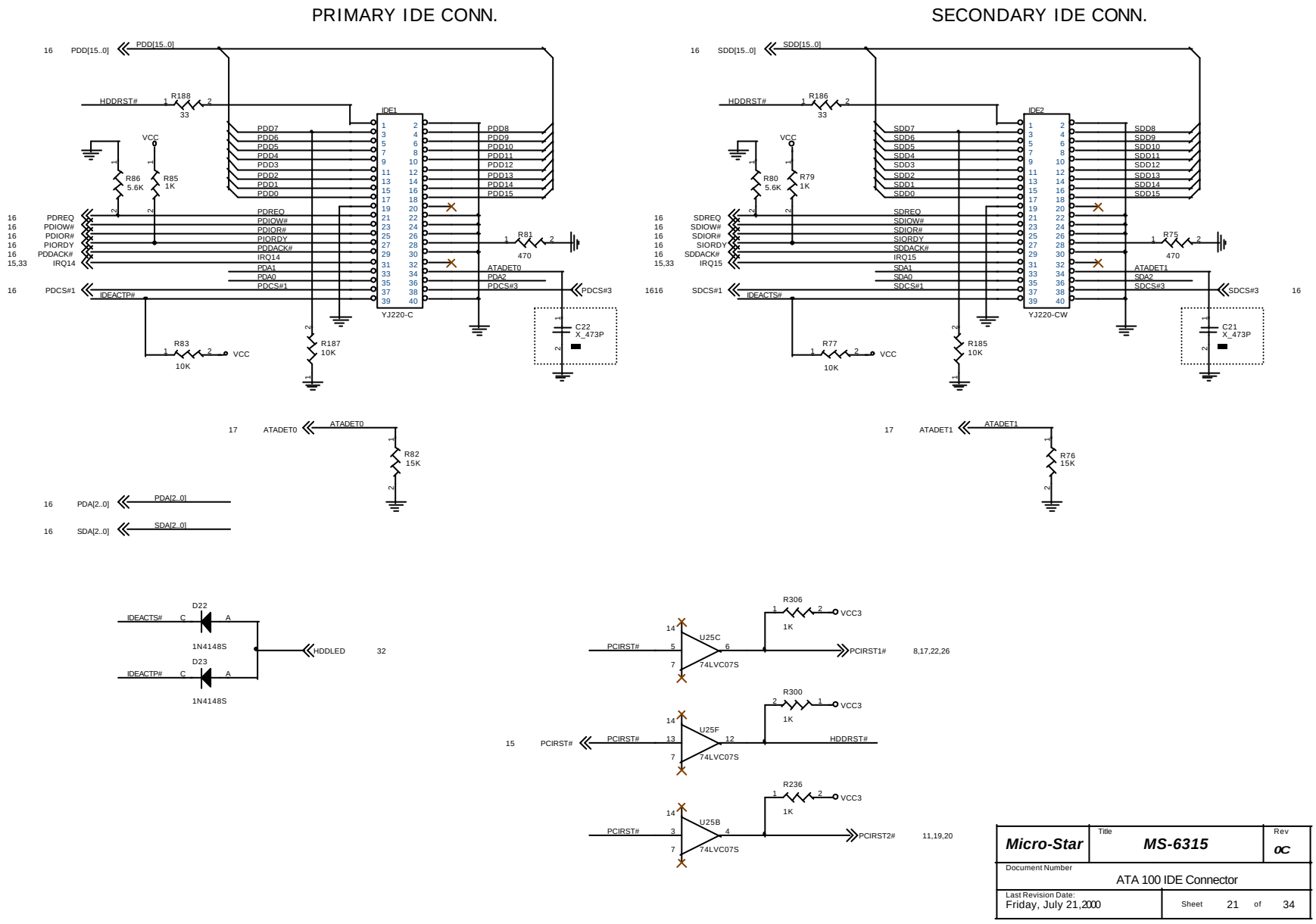

Micro-Star	Title: MS-6315		Rev: 0C
Document Number: ATA 100 IDE Connector			
Last Revision Date: Friday, July 21,2000		Sheet 21 of 34	

Super I/O

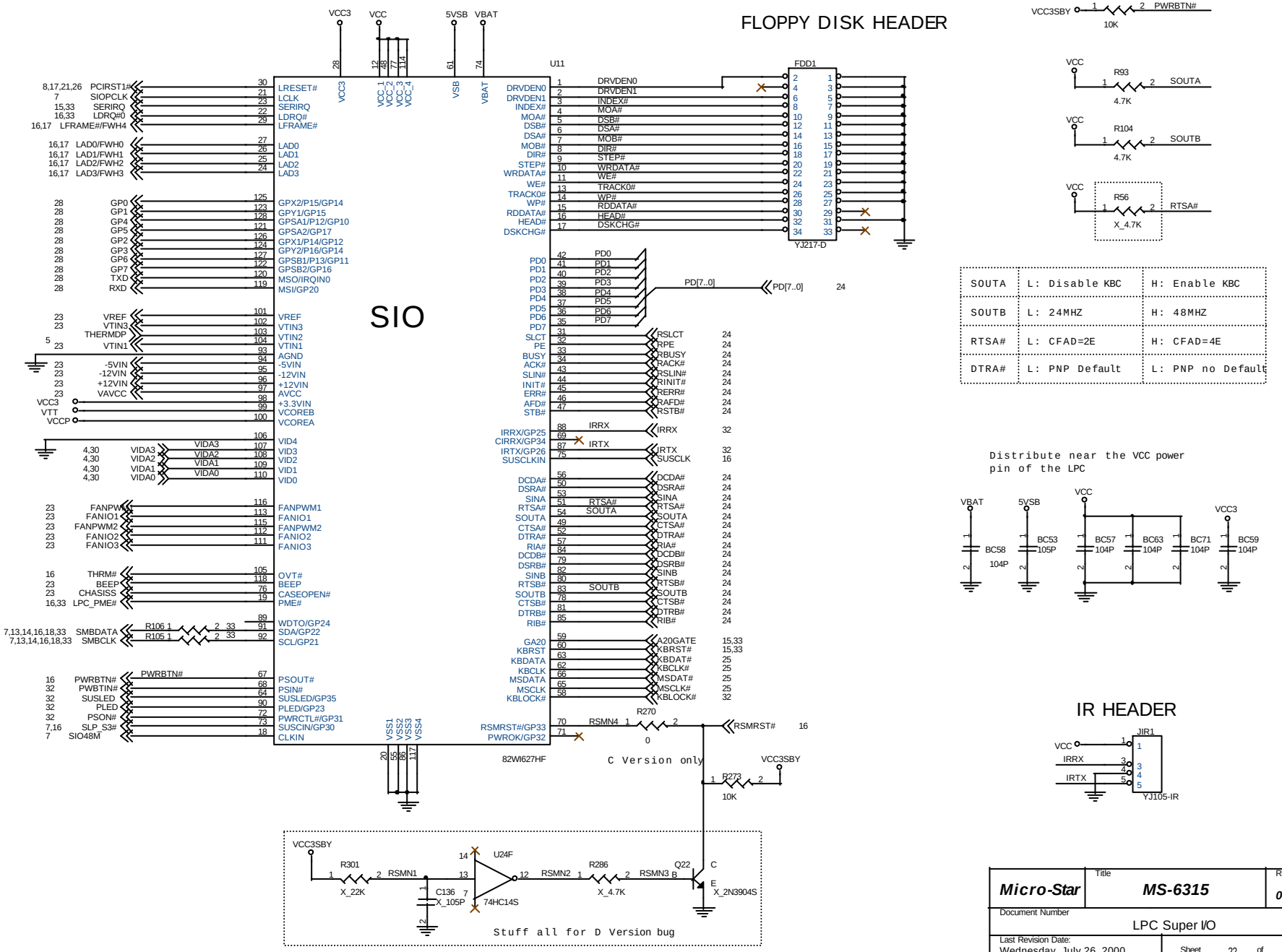

Micro-Star	Title: MS-6315	Rev: 0C
	Document Number: LPC Super I/O	
	Last Revision Date: Wednesday, July 26, 2000	Sheet 22 of 34

Hardware Monitor

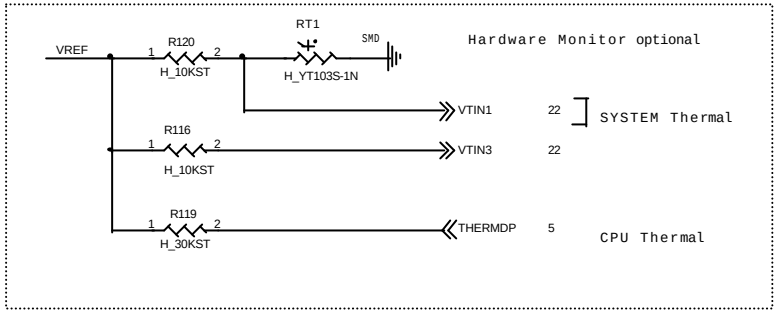

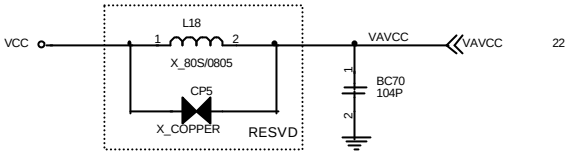

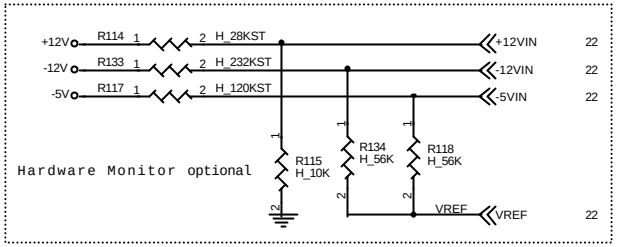

Chasiss Intrusion Header

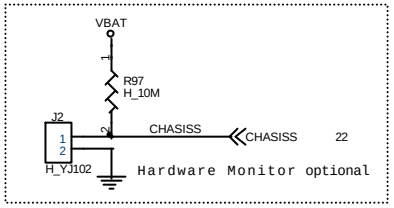

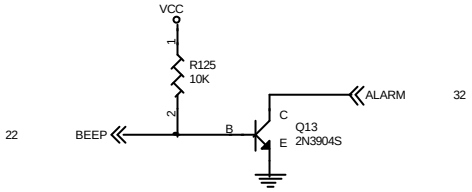

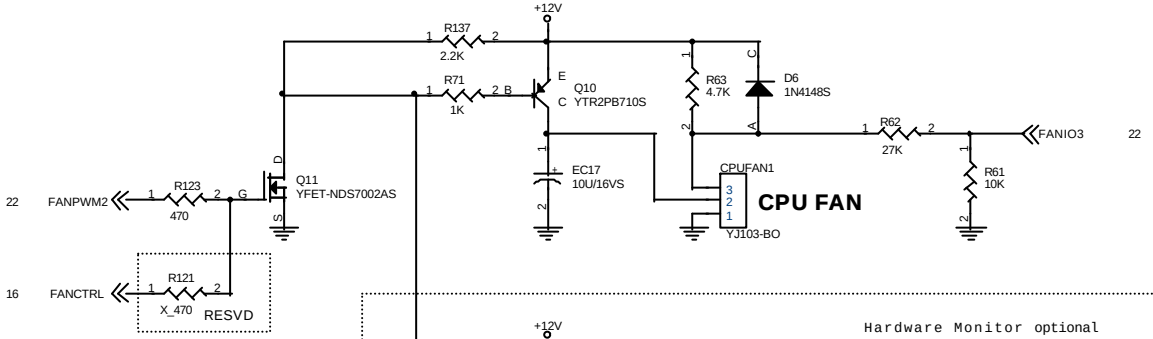

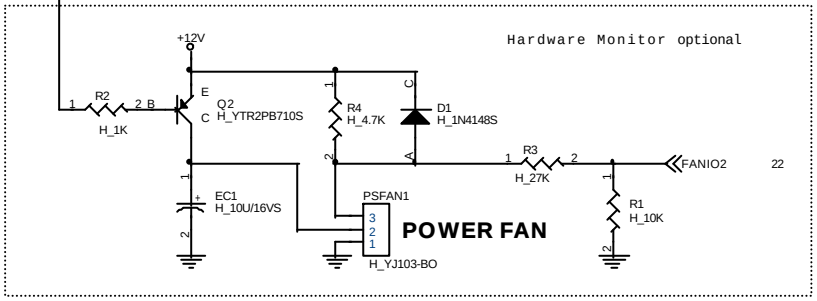

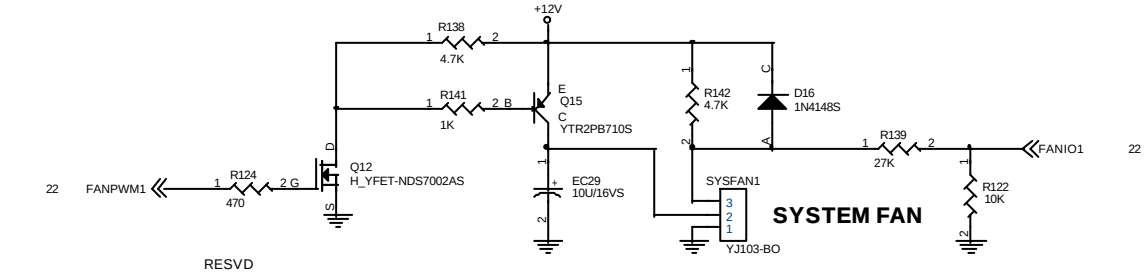

Micro-Star	Title: MS-6315	Rev: 0C
Document Number: Hardware Monitor		
Last Revision Date: Friday, July 21, 2000	Sheet 23 of 34	

Parallel Port / COM1port & COM2 Header

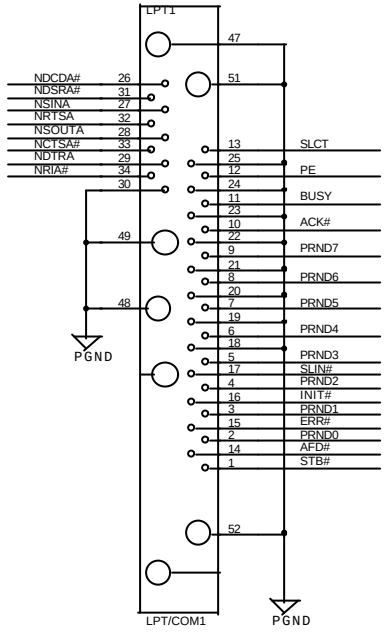

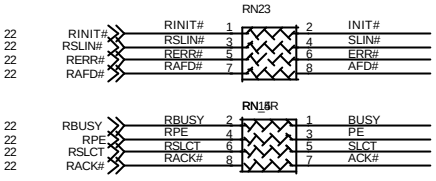

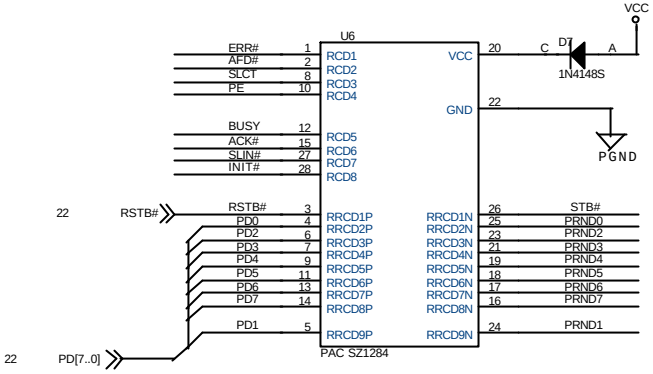

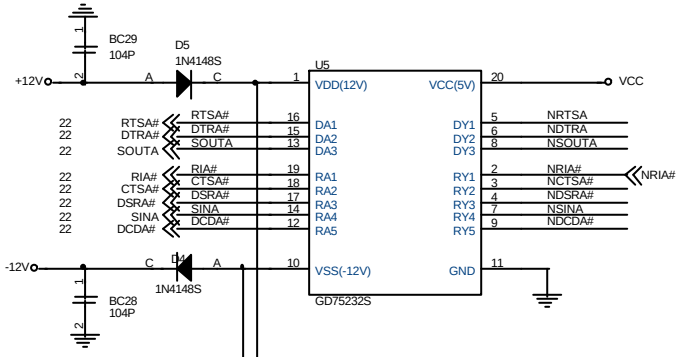

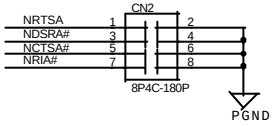

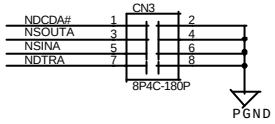

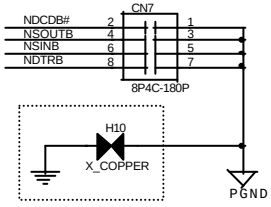

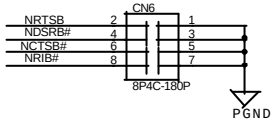

COM2 HEADER

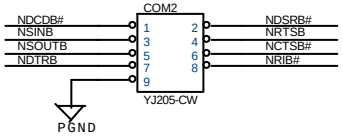

Micro-Star	Title: MS-6315	Rev: 0C
Document Number: Parallel Port Header		
Last Revision Date: Thursday, June 29, 2000	Sheet 24 of 34	

KEYBOARD/MOUSE PORTS

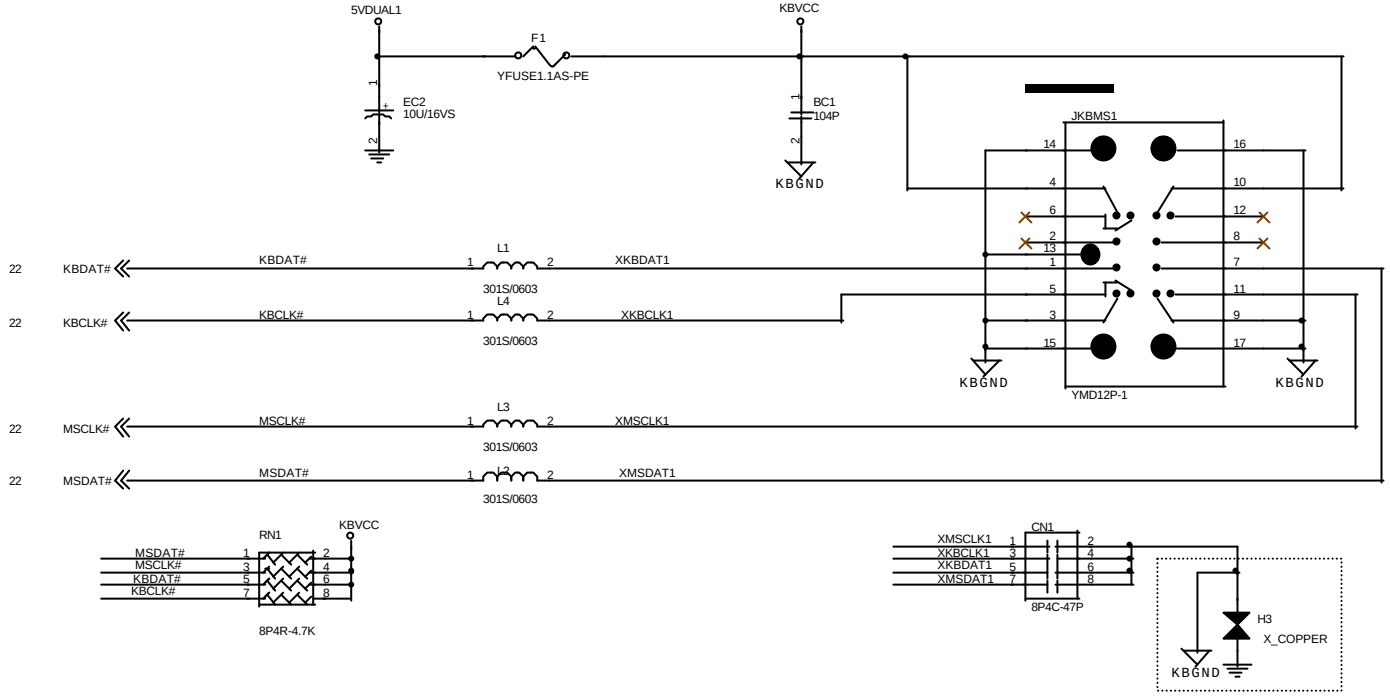

LAN WAKEUP HEADER

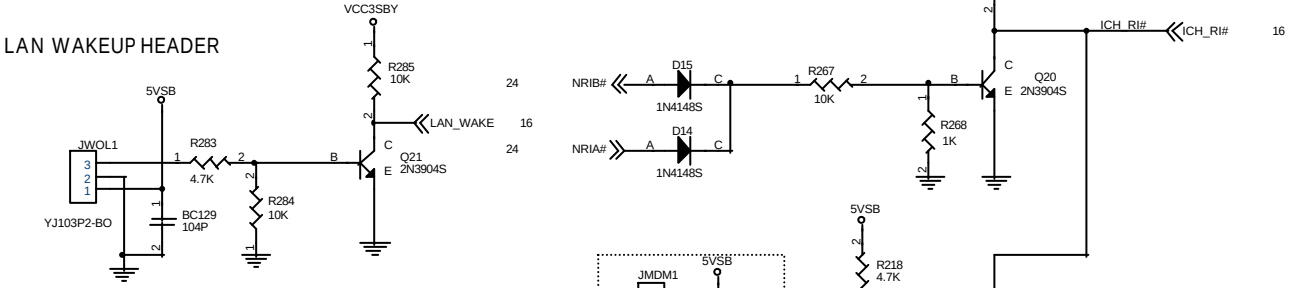

INTERNAL MODEM WAKEUP HEADER

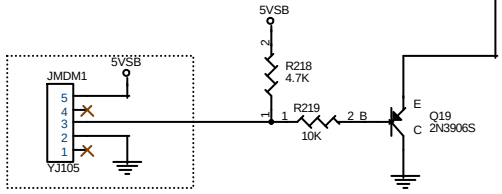

Micro-Star	Title: MS6315	Rev: 0C
Document Number: Keyboard board / Mouse port		
Last Revision Date: Thursday, June 29, 2000	Sheet 25 of 34	

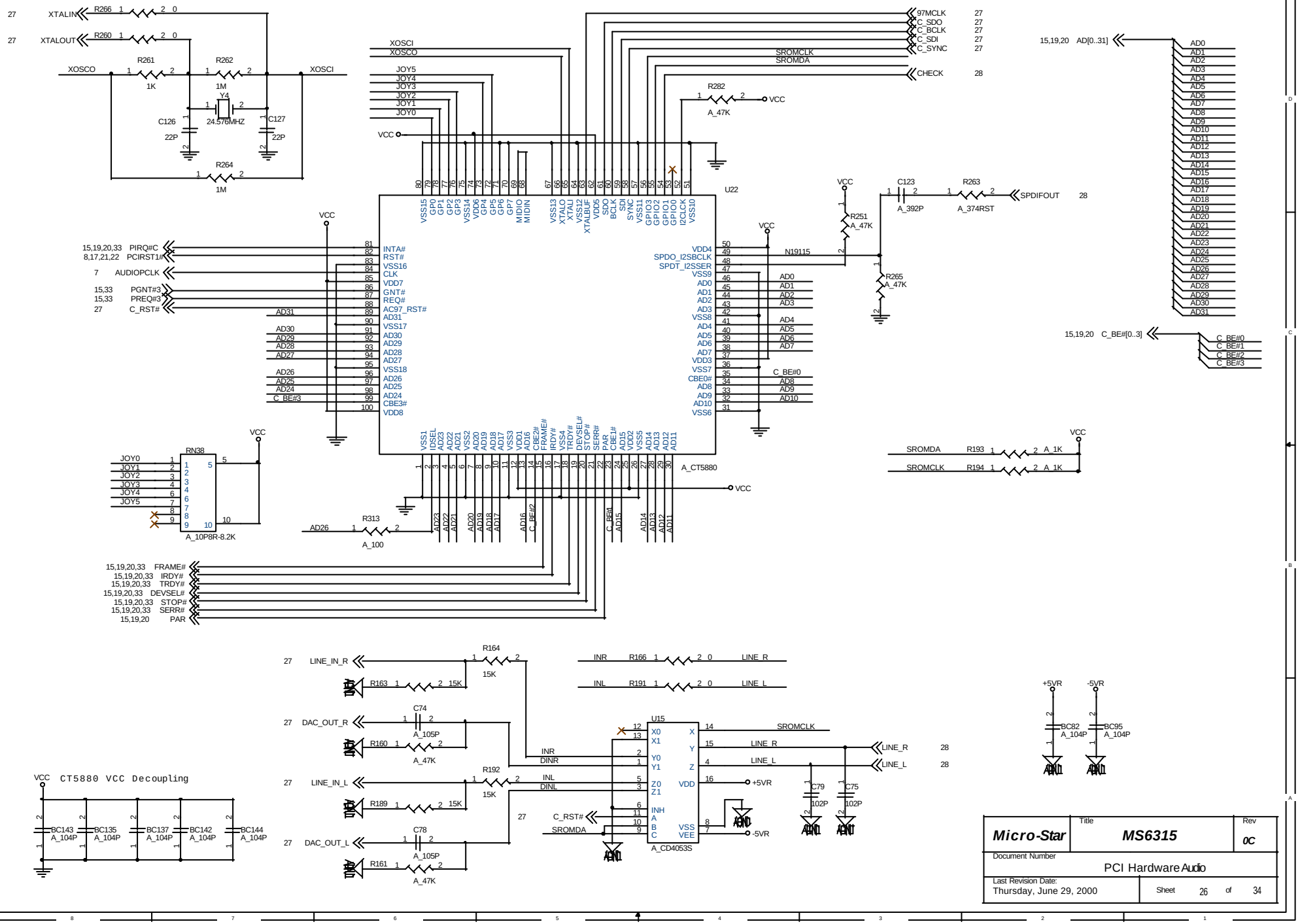
XTALIN
XTALOUT
R266
R260
R261
R262
R264
1K
1M
1M
Y4
24.576MHZ
C126
C127
22P
22P
XOSCO
XOSCI
U22
CT5880
A_CT5880
97MCLK
C_SDO
C_BCLK
C_SDI
C_SYNC
SROMCLK
SROMDA
CHECK
R282
A_47K
VCC
JOY5
JOY4
JOY3
JOY2
JOY1
JOY0
AD[0..31]
C_BE#[0..3]
PIRQ#C
PCIRST1#
AUDIOPCLK
PGNT#3
PREQ#3
C_RST#
INTA#
RST#
CLK
GNT#
REQ#
AC97_RST#
CBE3#
N19115
R251
A_47K
C123
A_392P
R263
A_374RST
SPDIFOUT
R265
A_47K
RN38
A_10P8R-8.2K
R313
A_100
SROMDA
SROMCLK
R193
R194
A_1K
FRAME#
IRDY#
TRDY#
DEVSEL#
STOP#
SERR#
PAR
LINE_IN_R
LINE_IN_L
DAC_OUT_R
DAC_OUT_L
R164
R192
R163
R189
R160
R161
15K
A_47K
A_105P
C74
C78
INR
INL
R166
R191
LINE_R
LINE_L
U15
A_CD4053S
DINR
DINL
+5VR
-5VR
C79
C75
102P
BC82
BC95
A_104P
BC143
BC135
BC137
BC142
BC144
CT5880 VCC Decoupling
Micro-Star
MS6315
0C
PCI Hardware Audio
Thursday, June 29, 2000
Sheet 26 of 34

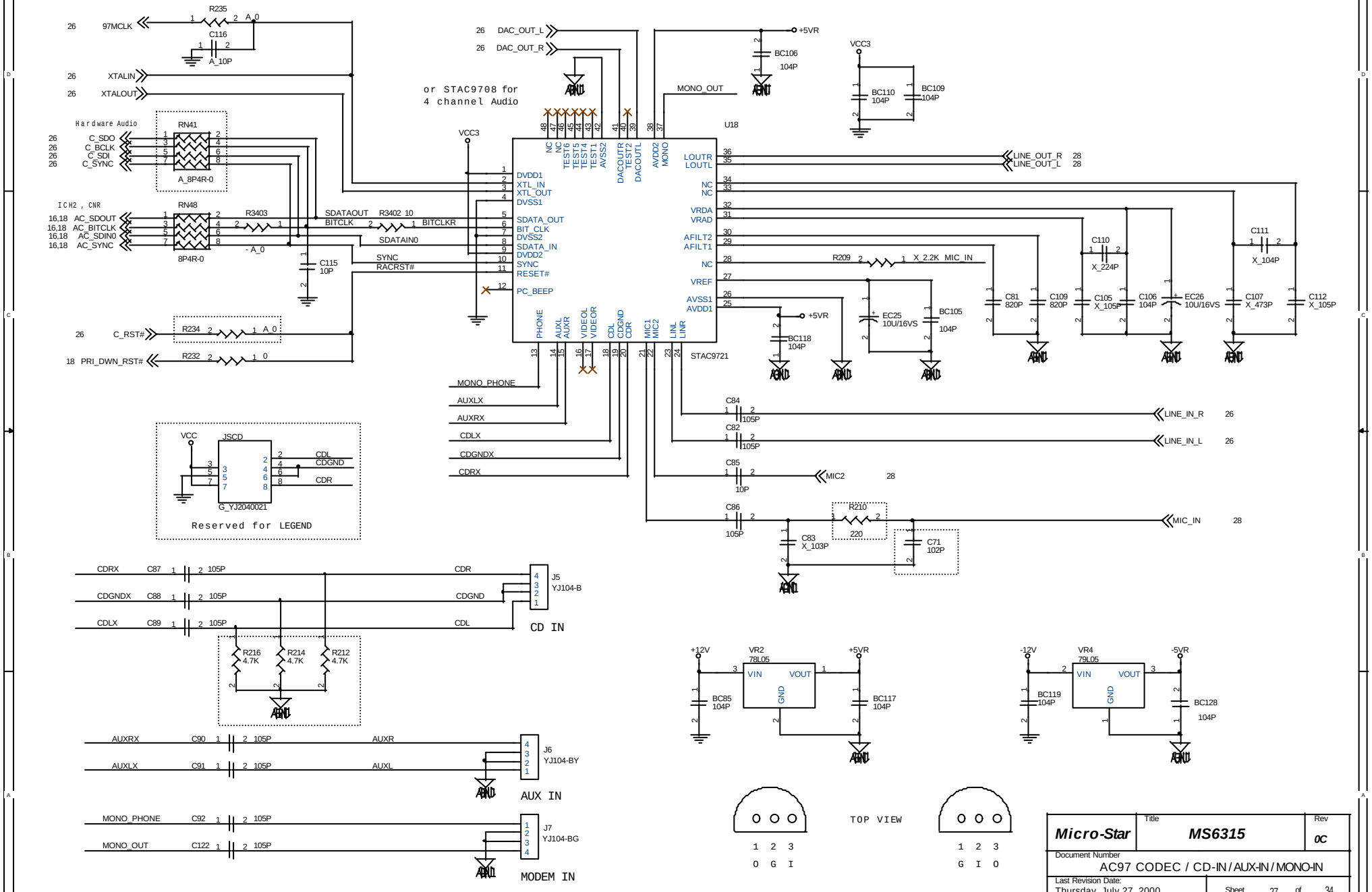
or STAC9708 for
4 channel Audio
Hardware Audio
ICH2 , CNR
Reserved for LEGEND
CD IN
AUX IN
MODEM IN
TOP VIEW
STAC9721
Micro-Star
MS6315
0C
AC97 CODEC / CD-IN / AUX-IN / MONO-IN
Thursday, July 27, 2000
Sheet 27 of 34

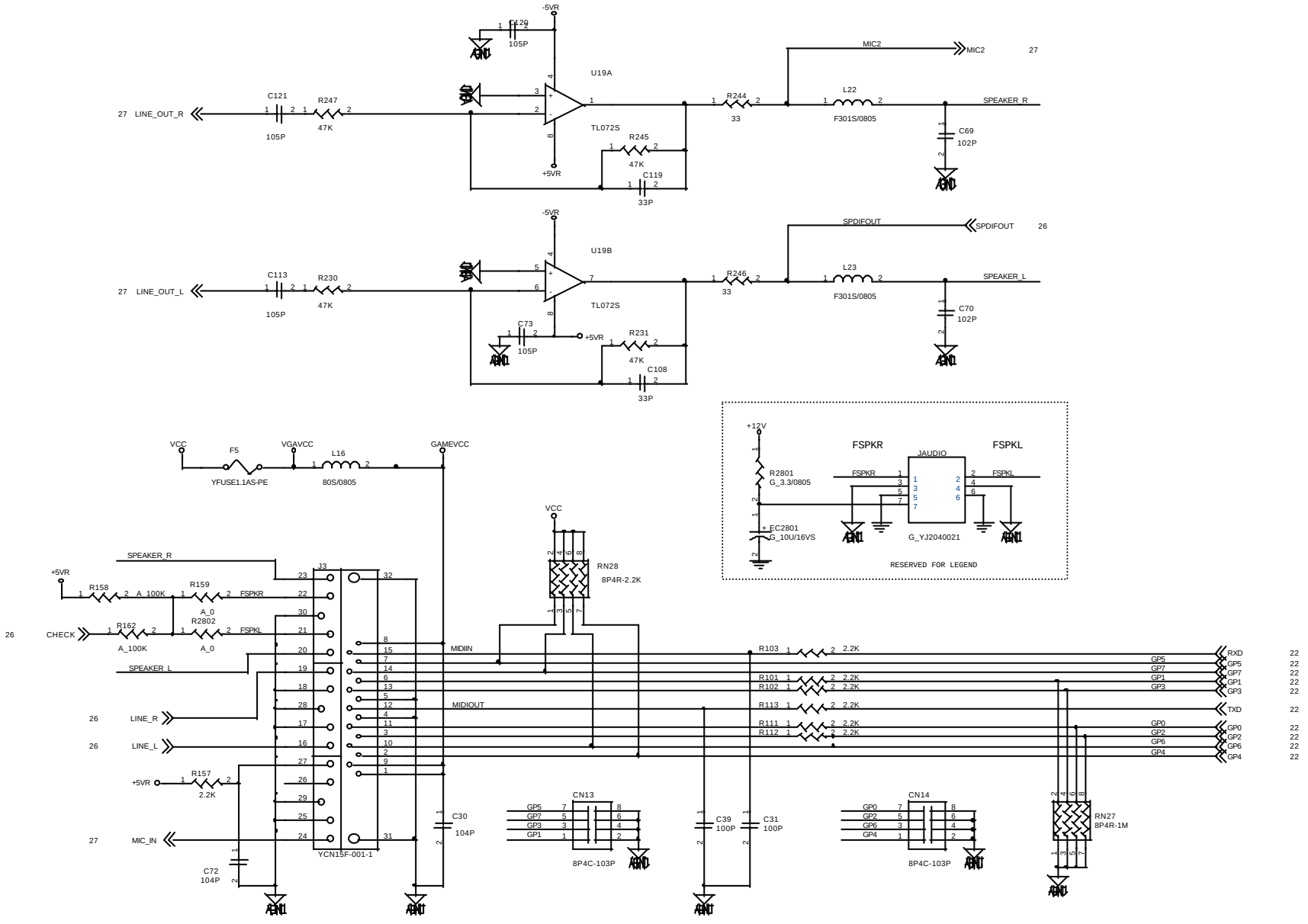

GAME PORT HEADER

Micro-Star	Title: MS6315		Rev: 0C
Document Number: Audio Amplifier & Game port Connector			
Last Revision Date: Wednesday, July 26,2000		Sheet 28 of 34	

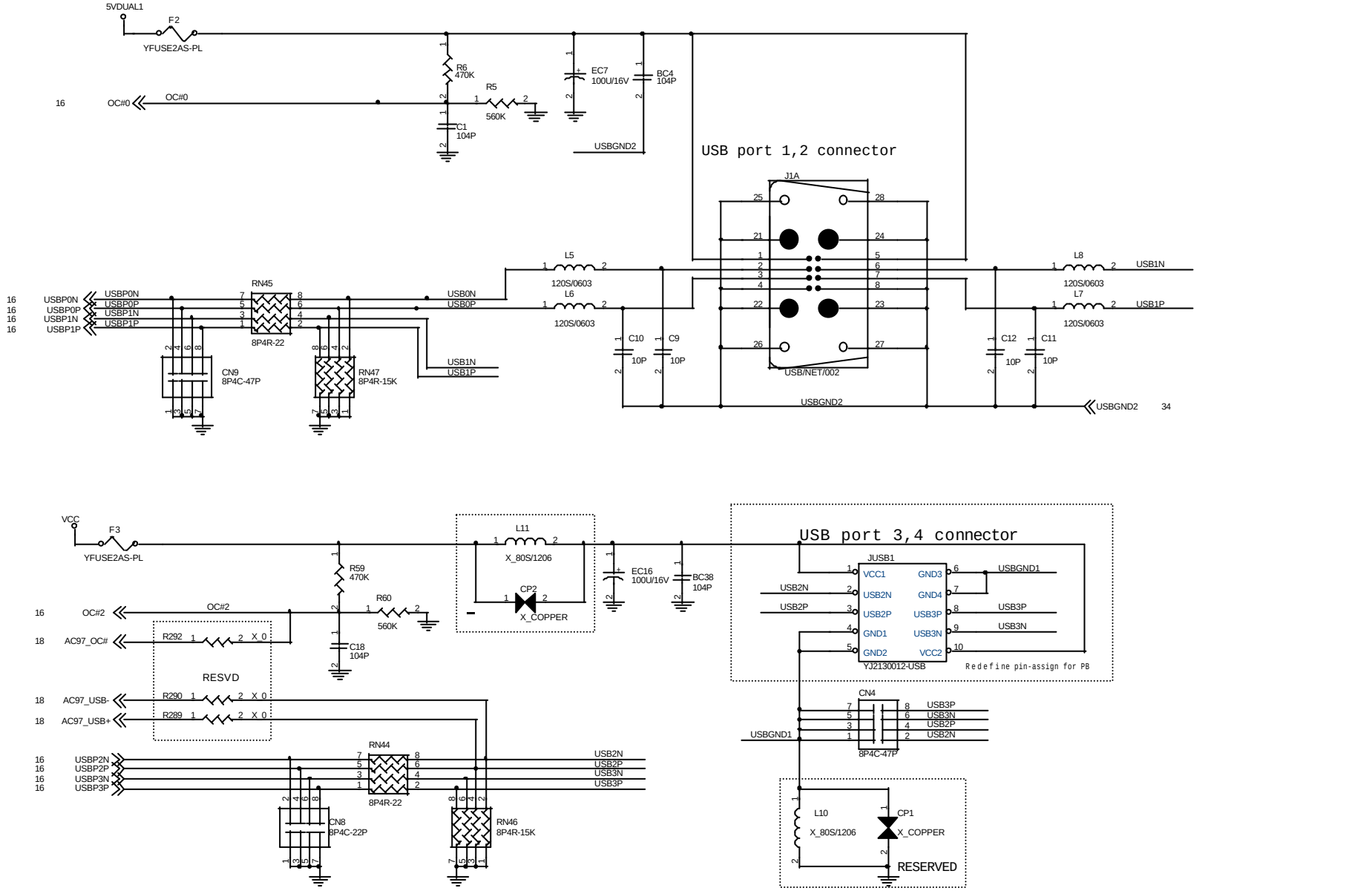

Micro-Star	Title: MS6315	Rev: 0C
Document Number: USB Connector		
Last Revision Date: Thursday, June 29, 2000	Sheet 29 of 34	

VRM 8.4

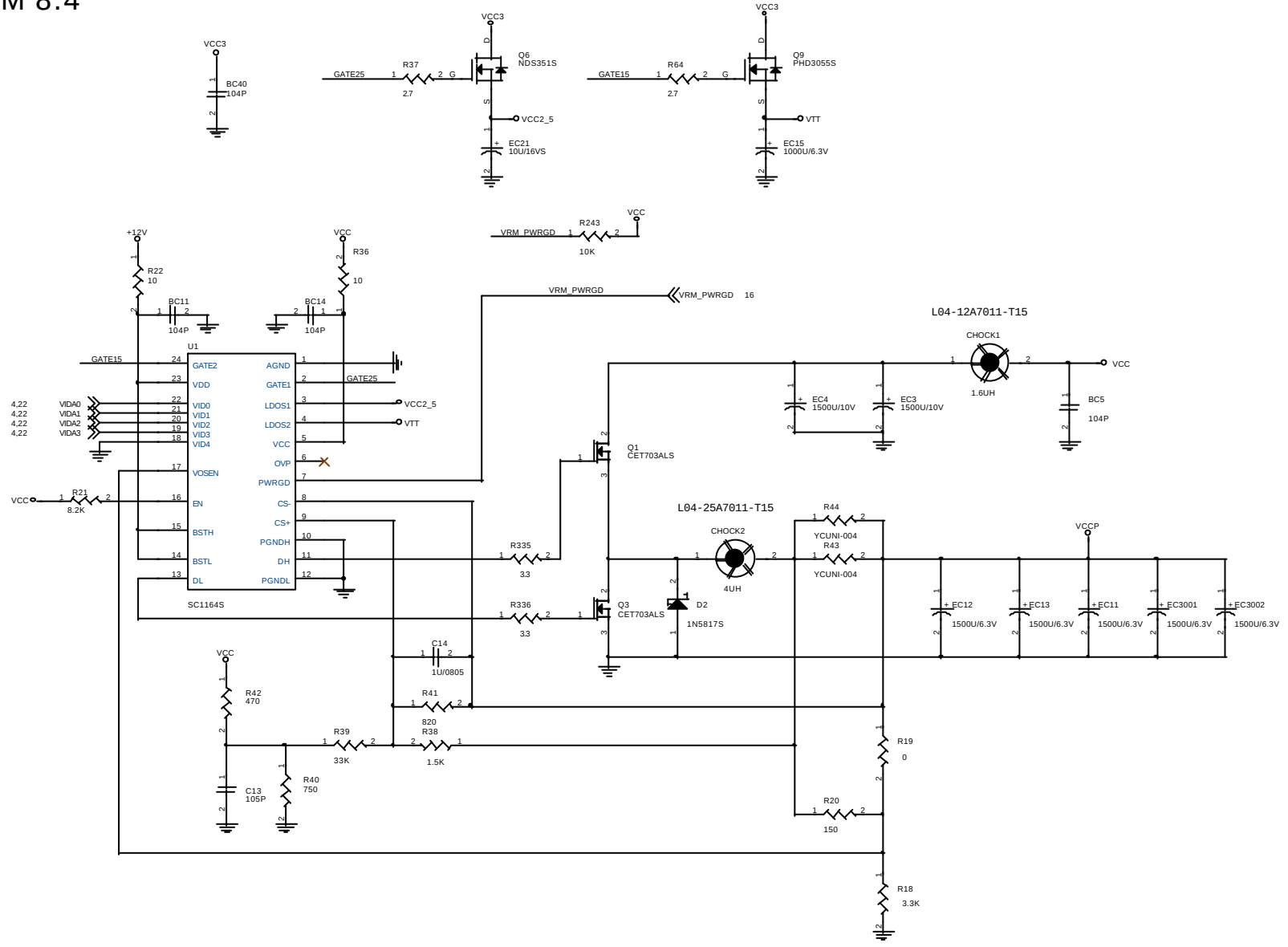

Micro-Star	Title: MS6315	Rev: 0C
Document Number: VRM 8.4 (SC1164) / VCCP , VCC2_5 , VTT		
Last Revision Date: Thursday, July 27,2000	Sheet 30 of 34	

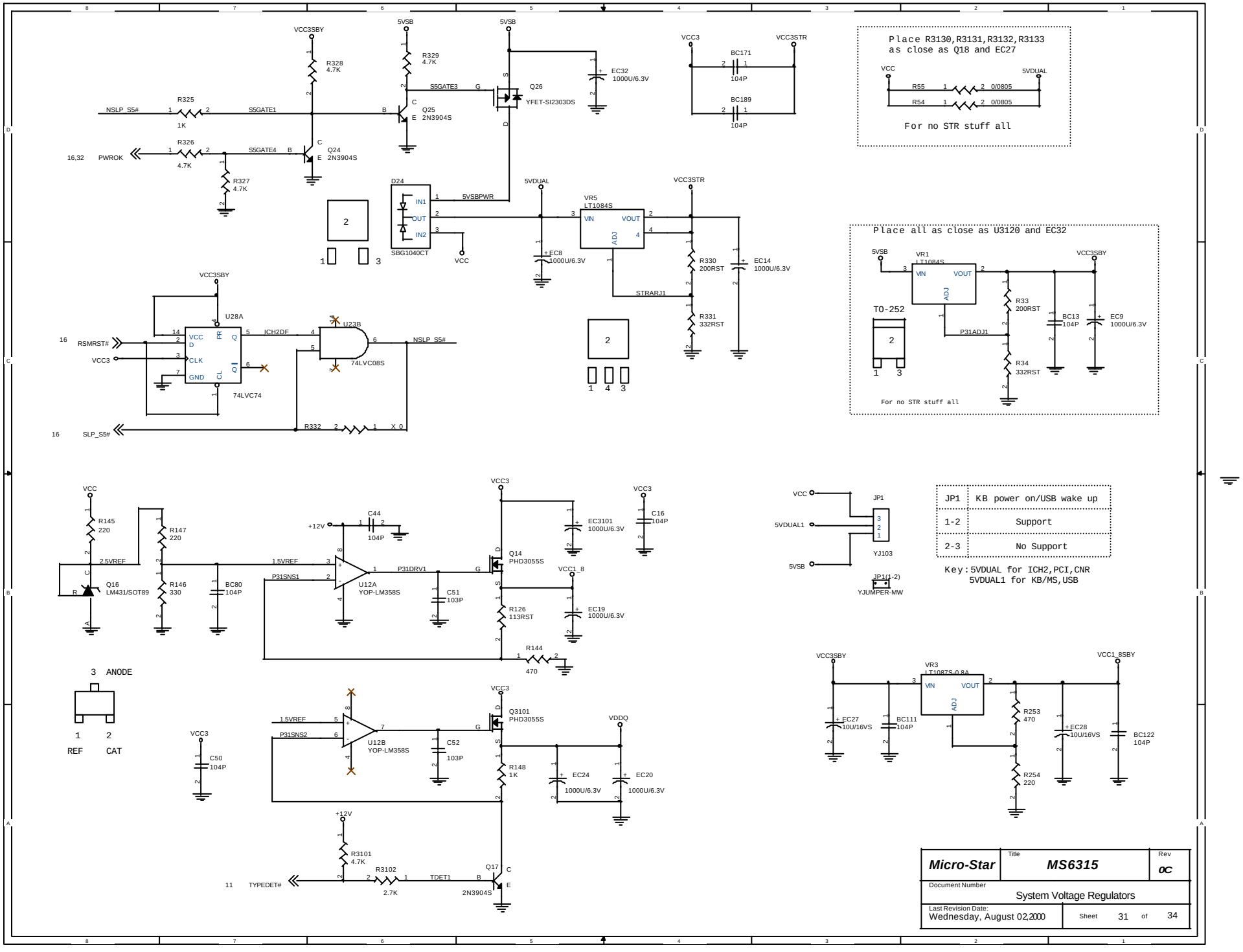

Micro-Star	Title: MS6315		Rev: 0C
	Document Number: System Voltage Regulators		
	Last Revision Date: Wednesday, August 02,2000	Sheet 31 of 34	

Front Panel & Power Connector

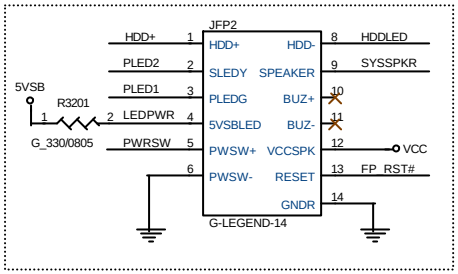

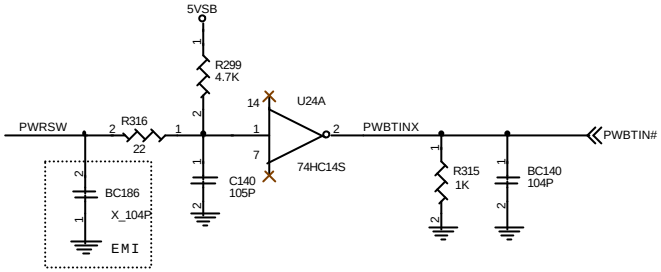

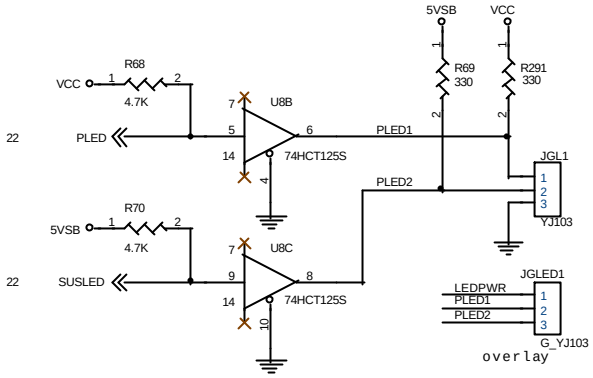

ESD Protect

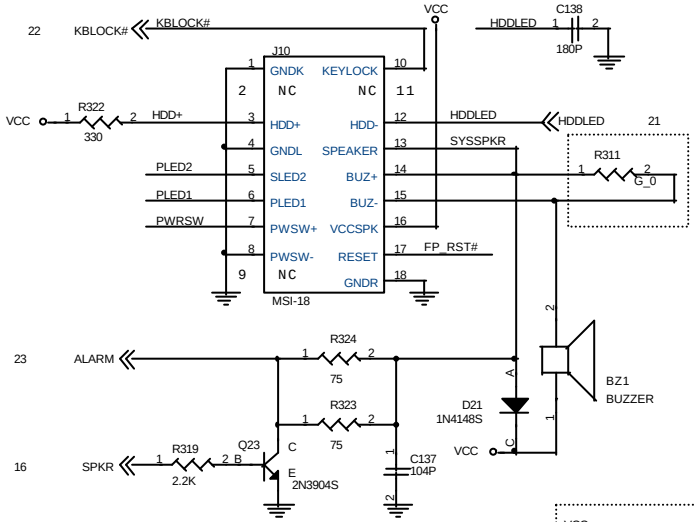

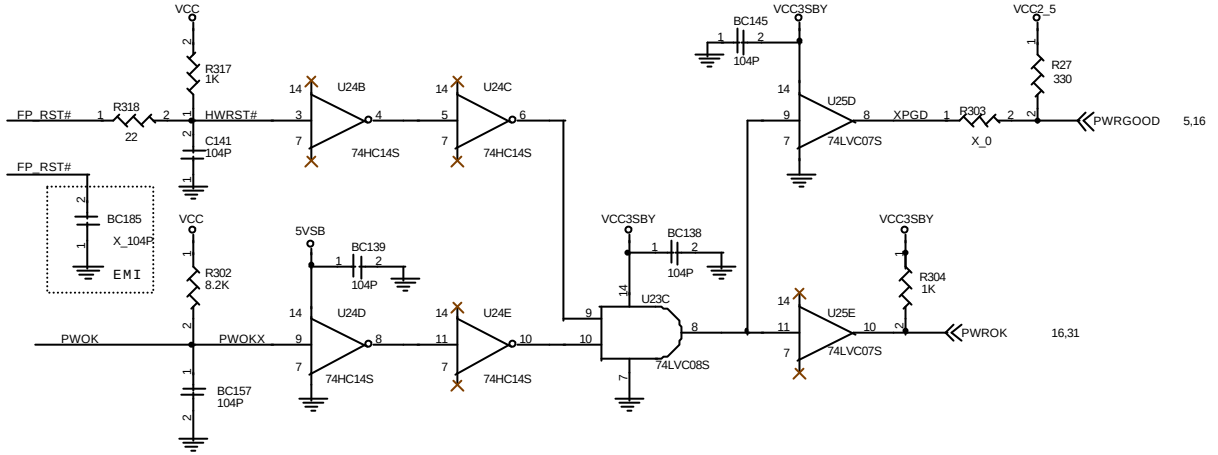

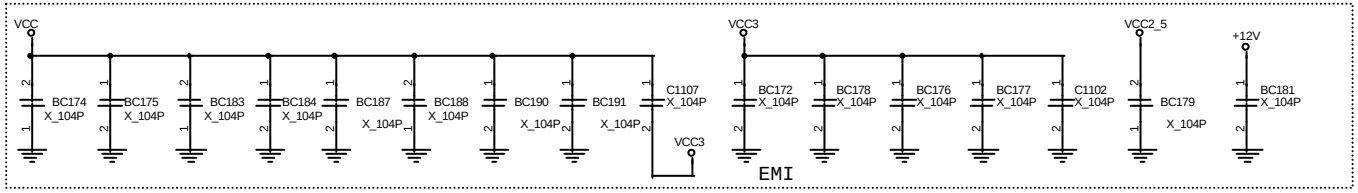

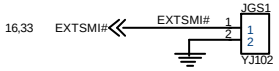

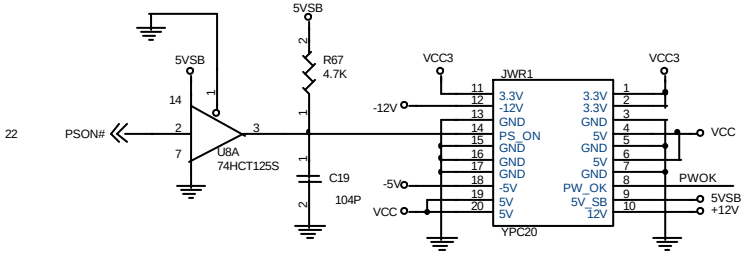

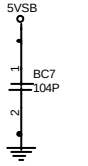

BULK POWER DECOUPLING

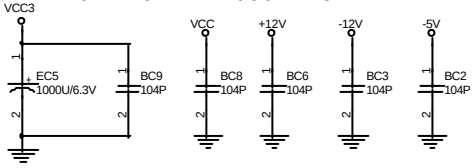

Micro-Star	Title: MS6315	Rev: 0C
Document Number: Front Panel and ATX power Connector		
Last Revision Date: Tuesday, August 01, 2000	Sheet 32 of 34	

PULL-UP RESISTORS

PCI BUS

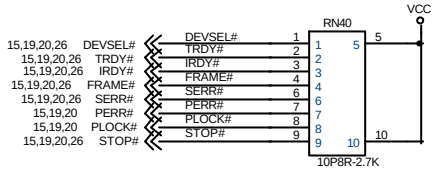

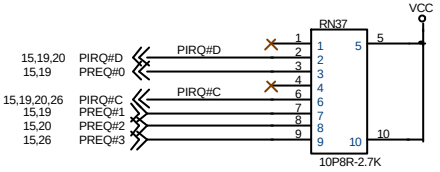

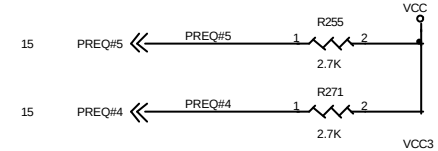

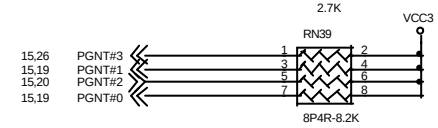

ICH

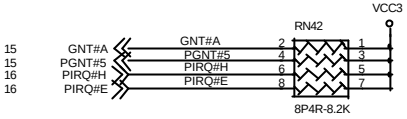

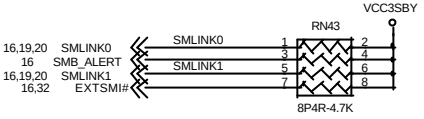

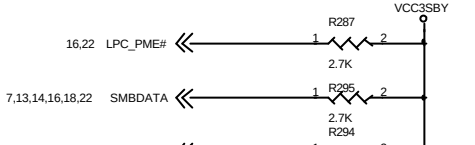

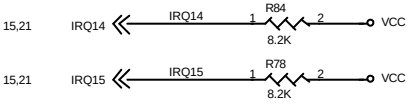

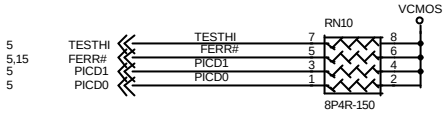

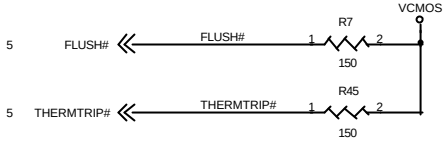

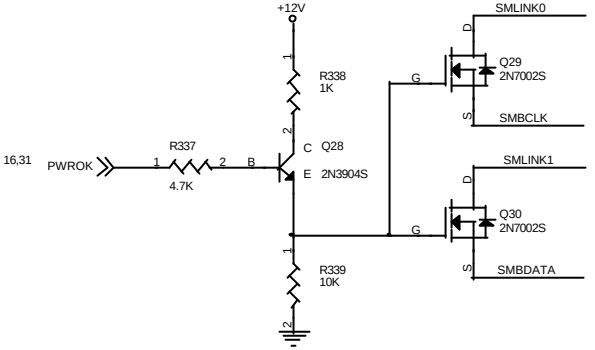

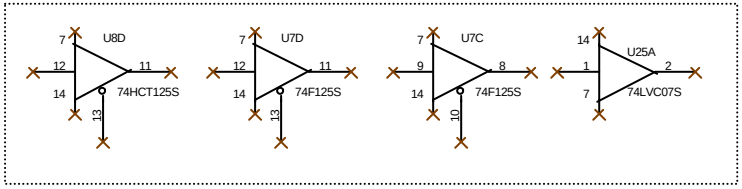

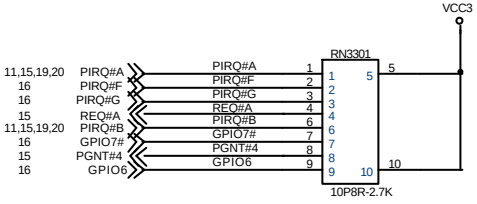

Micro-Star	Title: MS6315	Rev: 0C
Document Number: Pull-Up Resistors		
Last Revision Date: Wednesday, July 26, 2000	Sheet 33 of 34	

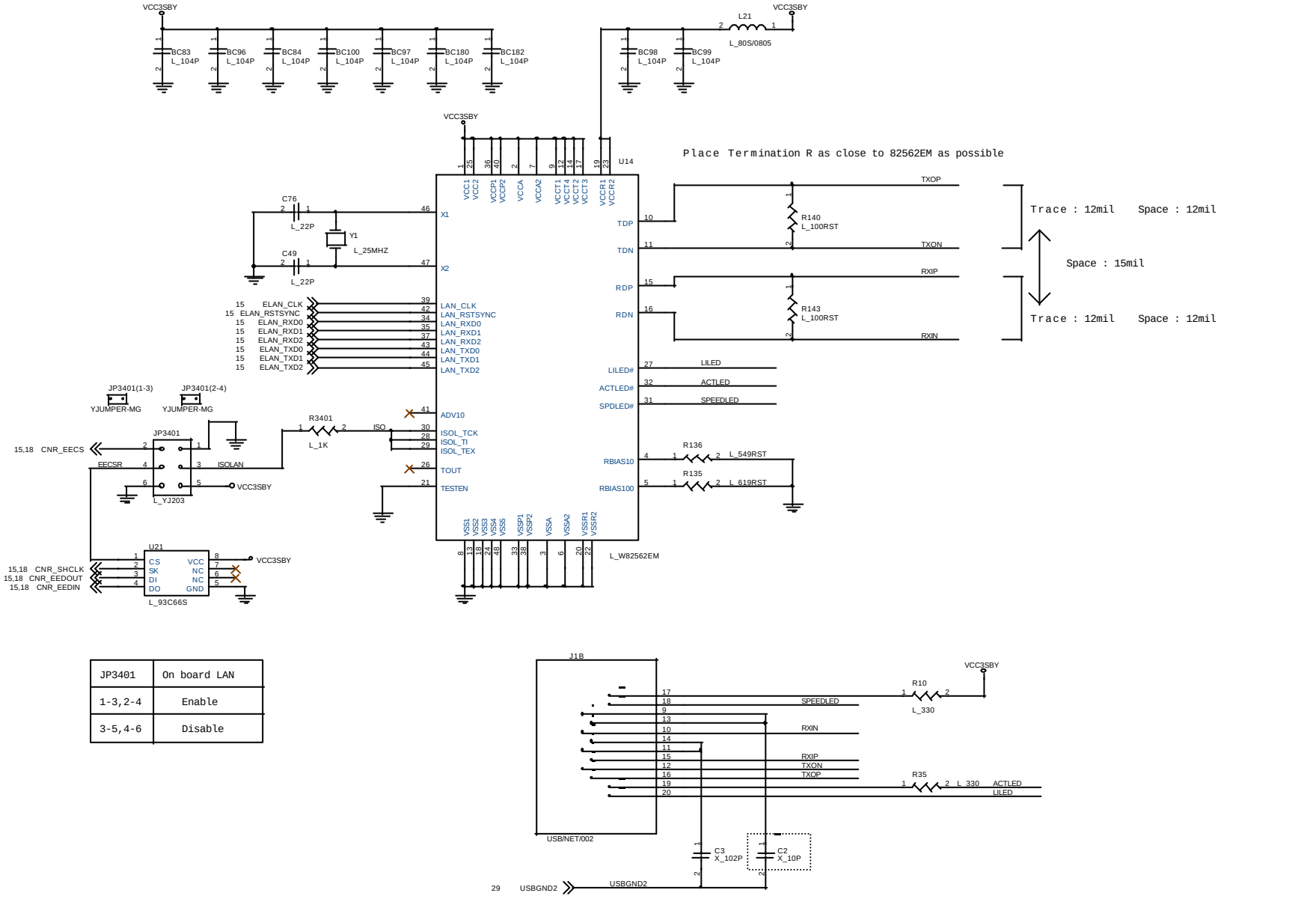

JP3401	On board LAN
1-3,2-4	Enable
3-5,4-6	Disable

Micro-Star	Title: MS6315	Rev: 0C
Document Number: LAN Connector & I562EM (Kinnereth+)		
Last Revision Date: Monday, August 07,2000	Sheet 34 of 34	

MS-6315 Micro-ATX

Intel PPGA 370 Processor

Intel Solano2 Chipset

Winbond 83627HF-AW LPC I/O

Creative CT5880 Controller 4-Speaker

ICH2 LAN Controller + Kinnereth Plus

Model option table

Model type	Function	Part Mark
MS6315	Stantard will be del	X_????
Option A	With/ CT5880	A_????
Option L	With/ LAN on board	L_????
Option H	With/ Hardware monitor	H_????
Option G	For Legend only	G_????

Stantard+W/LAN ,W/ HW Monitor , W/STR

Title	Page
Cover Sheet	1
Block Diagram	2
GPIO SPEC	3
370PGA Socket	4,5
GTL Termination	6
Clock Synthesizer	7
GMCH	8,9,10
AGP / AIMM Display Cache	11
Graphics Connectors	12
System Memory	13,14
ICH	15,16
FWH	17
CNR Riser	18
PCI Connectors	19,20
ATA66 Connectors	21
LPC I/O	22
Hardware monitor	23
Parallel / Serial Port	24
Keyboard/Mouse Connectors	25
PCI Audio Controllor	26
AC'97 Codec	27
Audio/Game Port	28
USB HUB & USB Connectors	29
VRM 8.4	30
Voltage Regulators	31
Front Panel	32
Pull-up Resistors	33
LAN	34
History	

Block Diagram

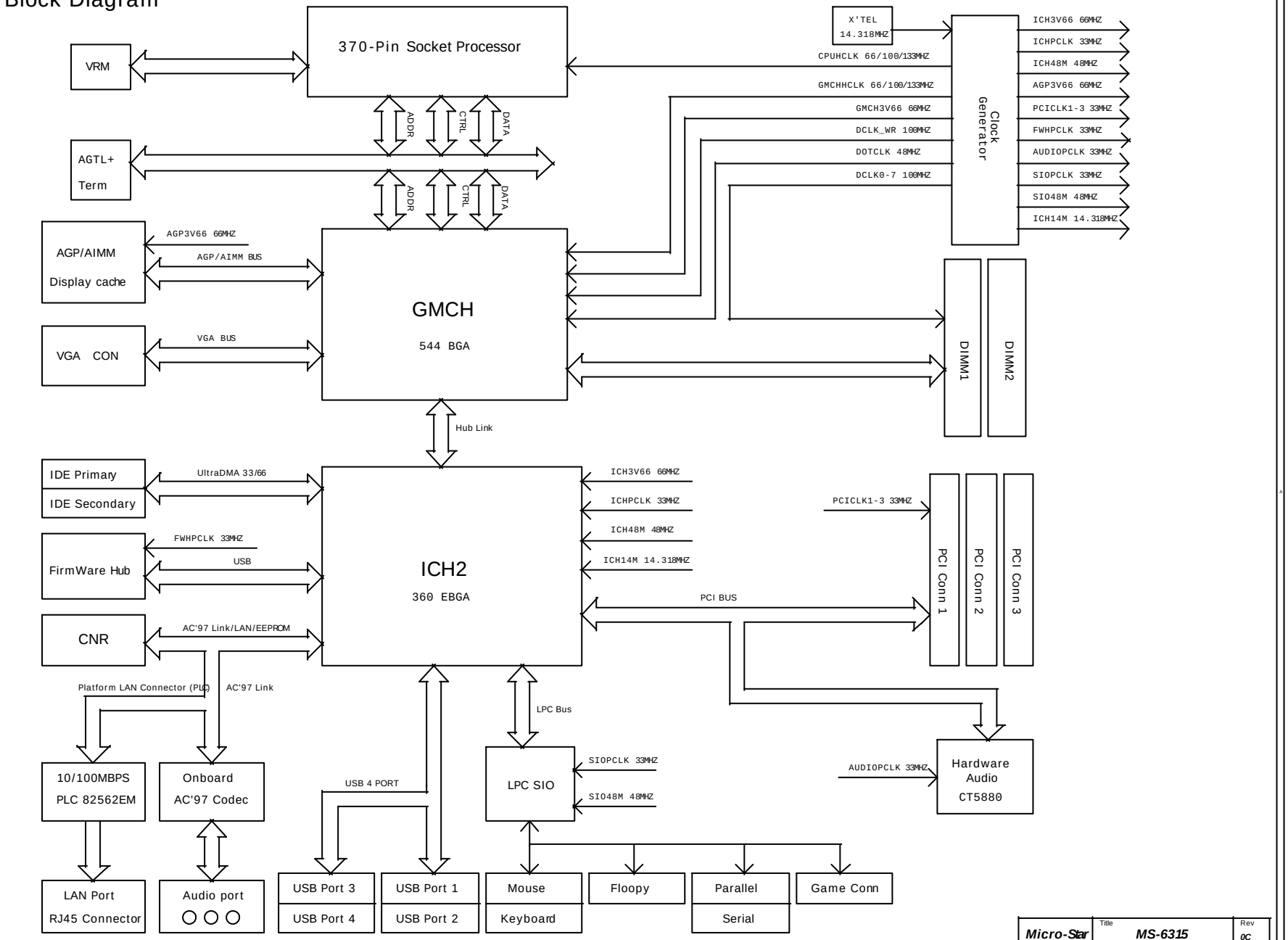

Micro-Star	Title: MS-6315	Rev: 0C
Document Number: Block Diagram		
Last Revision Date: Tuesday, August 01, 2000	Sheet 2 of 34	

General Purpose I/O Spec.

ICH

GPIO Pin	Type	Function
GPIO 0	I	Pull up (REQ#A)
GPIO 1	I	PREQ#5
GPIO 2~4	I	NC
GPIO 5	I	NC
GPIO 6	I	NC
GPIO 7	I	NC
GPIO 8	I	LAN Wake Up
GPIO 9	I	Not Implemented
GPIO 10	I	Not Implemented
GPIO 11	I	SMB_ALERT
GPIO 12	I	External SMI
GPIO 13	I	LPC PME
GPIO 14~15	I	Not Implemented
GPIO 16	O	Pull up(GNT#A)
GPIO 17	O	PGNT#5
GPIO 18~20	O	NC
GPIO 21	O	FAN Ctrl
GPIO 22	O	Pullup
GPIO 23	OD	BIOS update lock(H)/unlock(L)
GPIO 24	O	NC
GPIO 25	O	NC
GPIO 26	O	Not Implemented
GPIO 27	I/O	NC
GPIO 28	I/O	NC
GPIO 29~31	I/O	Not Implemented

PCI Config.

DEVICE	ICH INT Pin	IDSEL
PCI Slot 1	INTA# INTB# INTC# INTD#	AD16
PCI Slot 2	INTB# INTC# INTD# INTA#	AD17
PCI Slot 3	INTC# INTD# INTA# INTB#	AD18
CT5880	INTC#	AD26

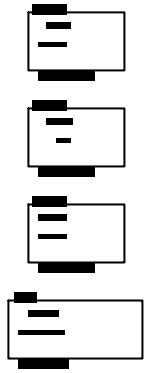

CLKVCC3 = VCC3

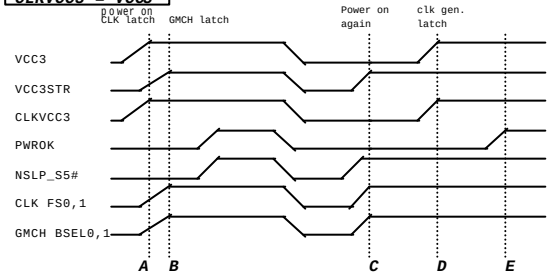

CLKVCC3 = VCC3STR

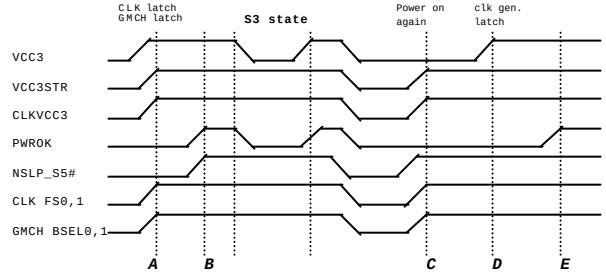

FWH

GPIO Pin	Type	Function
GPI 0	I	ATA IDE 1 Detect
GPI 1	I	ATA IDE 2 Detect
GPI 2	I	GPI2=L GPI3=H Flash from FDD
GPI 3	I	GPI2=H GPI3=L Boot Auto clear CMOS

ICH2 SMLINK0,1 Connect to PCI2 for PCI card AOL

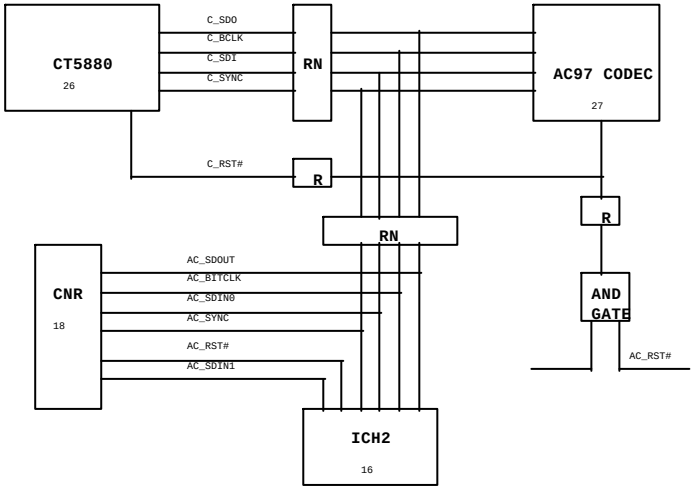

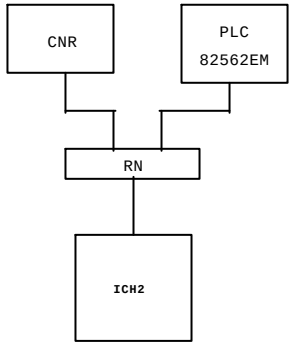

Micro-Star	MS-6315	100
BIOS GPIO SPEC.		
Friday, November 24, 2000	3	34

370PGA Socket Part 1

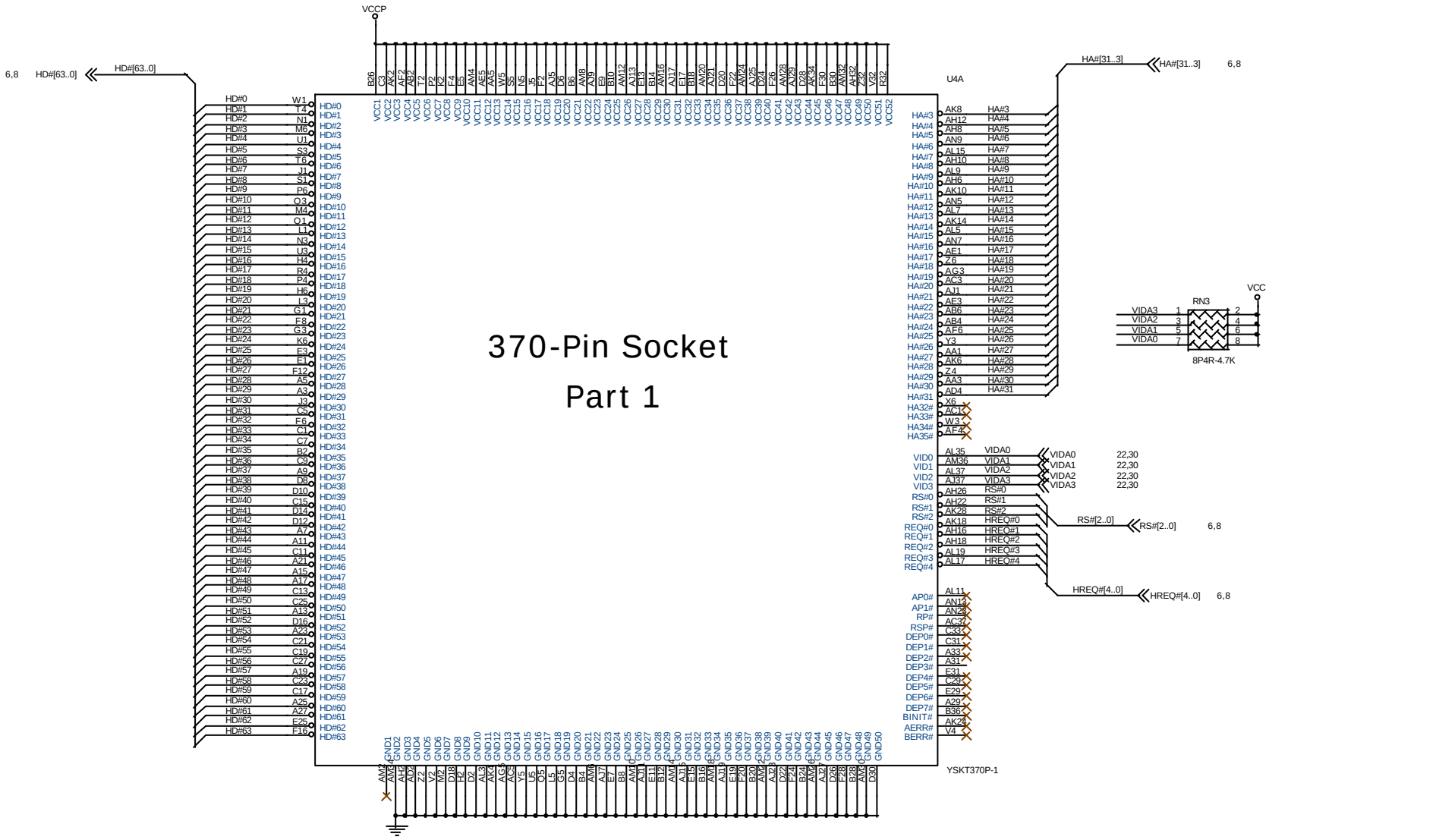

Micro-Star	Title: MS-6315		Rev: 100
Document Number: SOCKET 370 PGA-1			
Last Revision Date: Tuesday, August 01, 2000		Sheet 4 of 34	

370PGA Socket Part 2

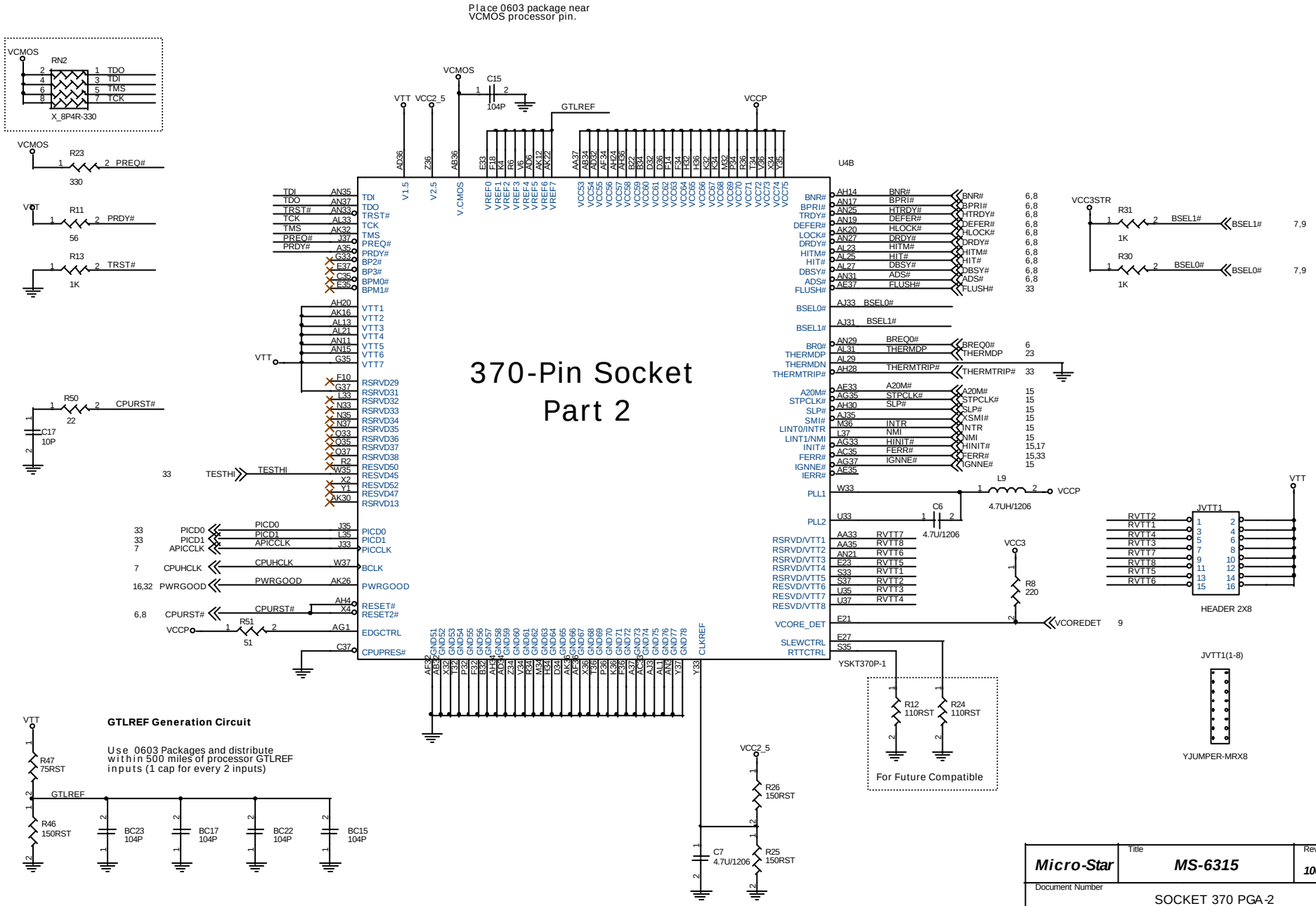

Micro-Star	Title: MS-6315	Rev: 100
Document Number: SOCKET 370 PGA-2		
Last Revision Date: Wednesday, August 02, 2000	Sheet 5 of 34	

GTL Termination

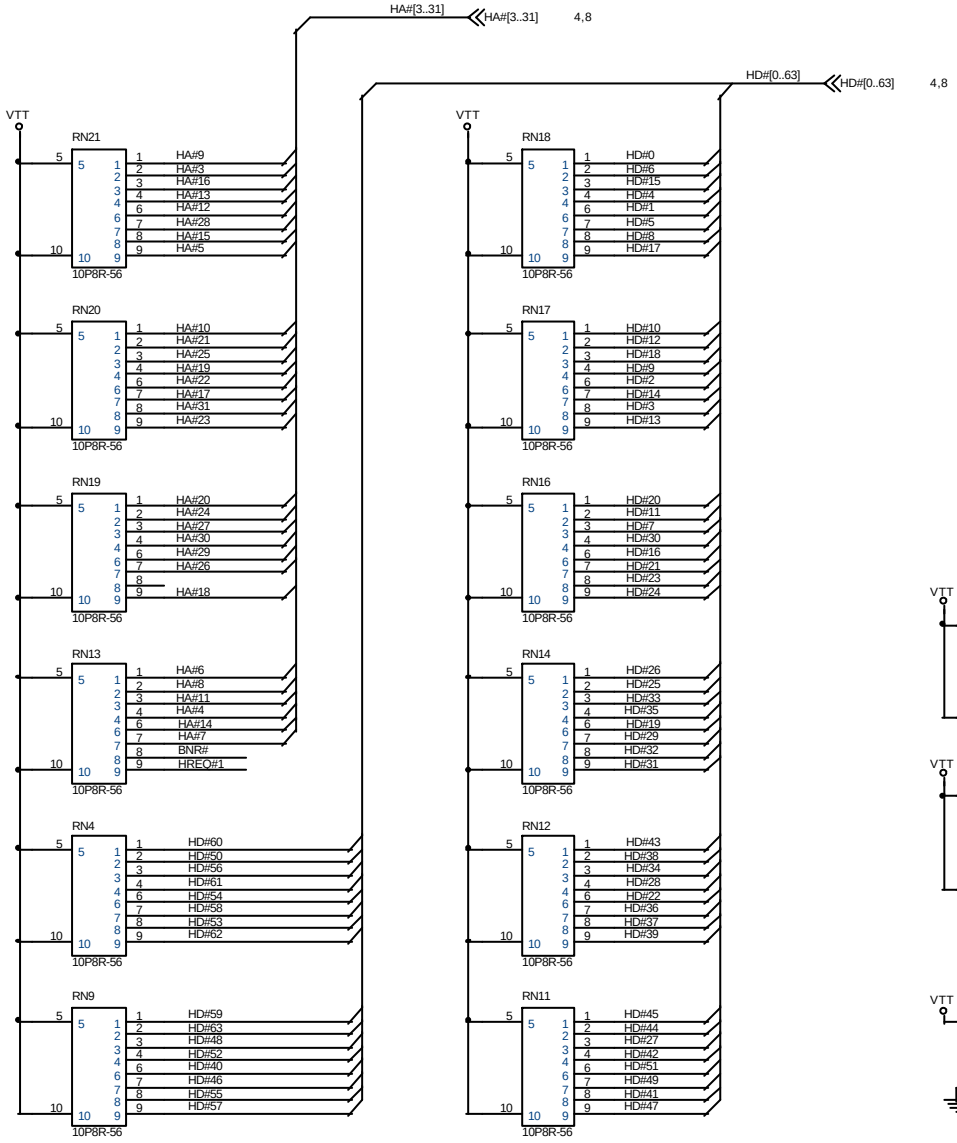

GTL VTT Bypass Capacitor

Every two R-packs add one 0.1U Cap.

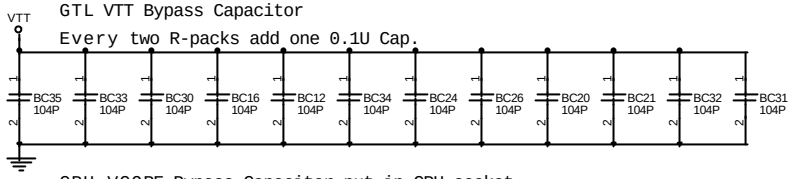

CPU VCORE Bypass Capacitor put in CPU socket

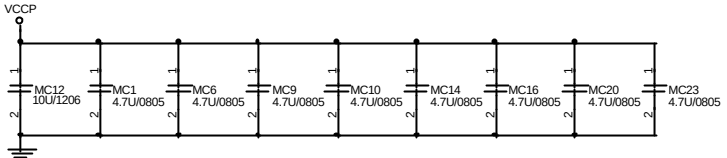

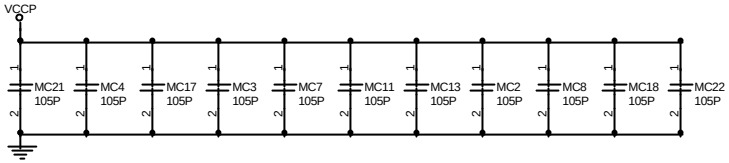

For VCCP

11 PCS 105P Cap. Placement

9 PCS 4.7U/0805 Cap. Placement

1 PCS 10U/1206 Cap. Placement

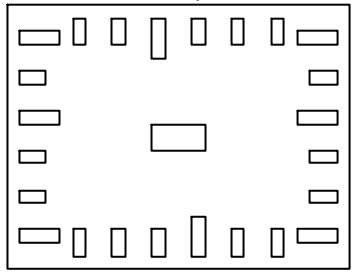

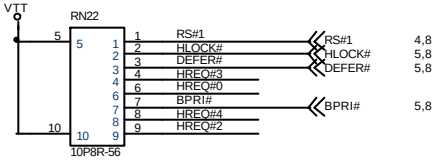

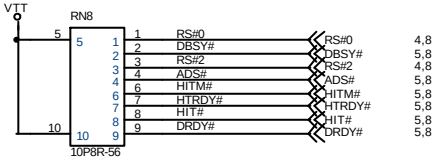

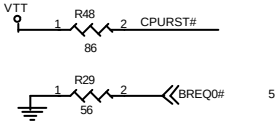

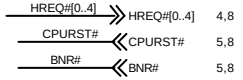

Micro-Star	Title: MS-6315	Rev: 100
Document Number: GTL Termination		
Last Revision Date: Tuesday, August 01, 2000	Sheet 6 of 34	

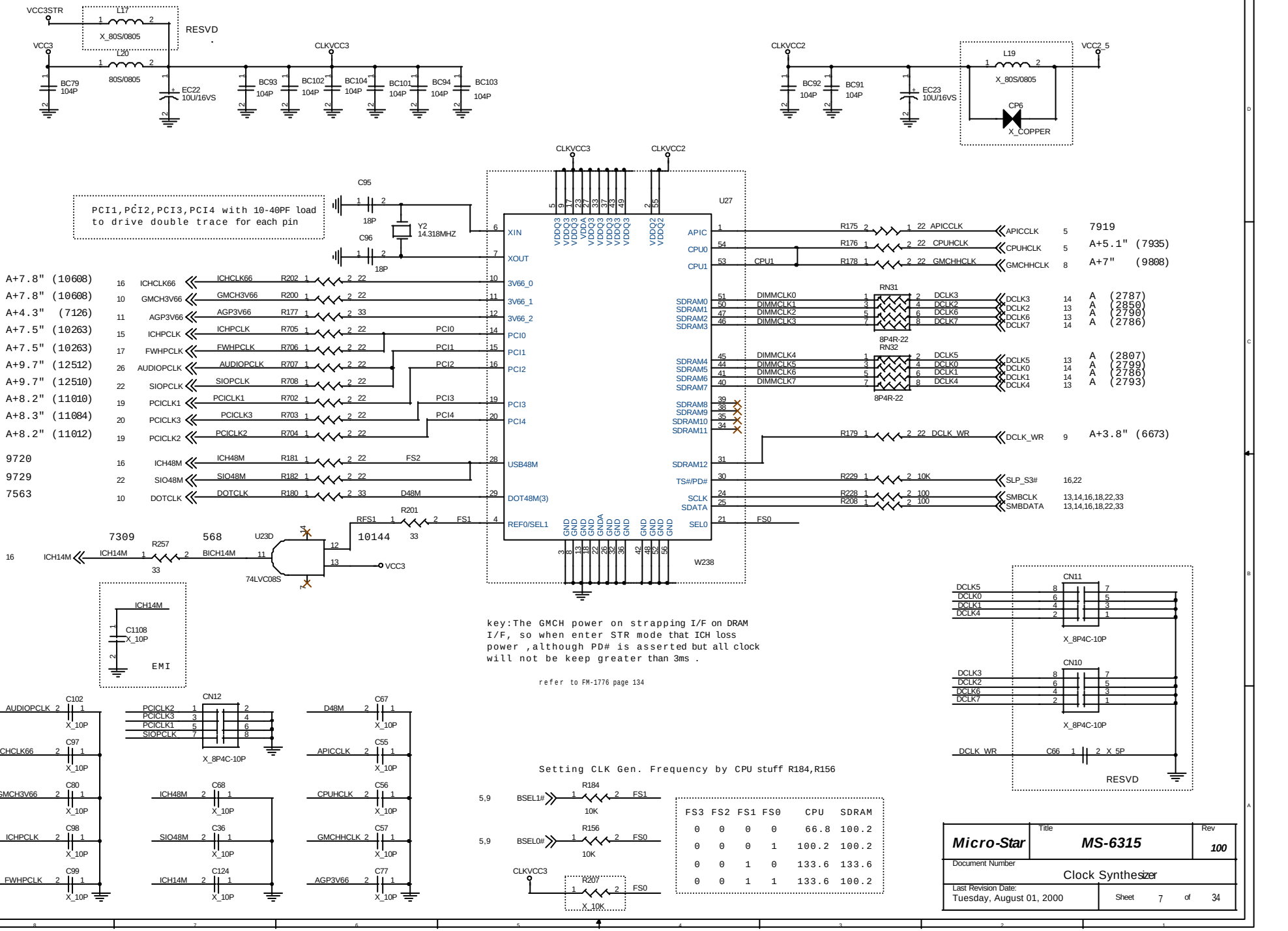
VCC3STR
L17
X_80S/0805
RESVD
VCC3
L20
80S/0805
BC79 104P
EC22 10U/16VS
CLKVCC3
BC93 104P
BC102 104P
BC104 104P
BC101 104P
BC94 104P
BC103 104P
CLKVCC2
BC92 104P
BC91 104P
EC23 10U/16VS
L19
X_80S/0805
VCC2_5
CP6
X_COPPER
PCI1,PCI2,PCI3,PCI4 with 10-40PF load to drive double trace for each pin
C95
18P
Y2
14.318MHZ
C96
18P
U27
XIN
XOUT
3V66_0
3V66_1
3V66_2
PCI0
PCI1
PCI2
PCI3
PCI4
USB48M
DOT48M(3)
REF0/SEL1
APIC
CPU0
CPU1
SDRAM0
SDRAM1
SDRAM2
SDRAM3
SDRAM4
SDRAM5
SDRAM6
SDRAM7
SDRAM8
SDRAM9
SDRAM10
SDRAM11
SDRAM12
TS#/PD#
SCLK
SDATA
SEL0
W238
A+7.8" (10608)
A+7.8" (10608)
A+4.3" (7126)
A+7.5" (10263)
A+7.5" (10263)
A+9.7" (12512)
A+9.7" (12510)
A+8.2" (11010)
A+8.3" (11084)
A+8.2" (11012)
9720
9729
7563
ICHCLK66
GMCH3V66
AGP3V66
ICHPCLK
FWHPCLK
AUDIOPCLK
SIOPCLK
PCICLK1
PCICLK3
PCICLK2
ICH48M
SIO48M
DOTCLK
R202 22
R200 22
R177 33
R705 22
R706 22
R707 22
R708 22
R702 22
R703 22
R704 22
R181 22
R182 22
R180 33
FS2
D48M
FS1
R201 33
RFS1
10144
7309
568
U23D
74LVC08S
R257 33
ICH14M
BICH14M
VCC3
APICCLK
CPUHCLK
GMCHHCLK
DCLK_WR
SLP_S3#
SMBCLK
SMBDATA
R175 22
R176 22
R178 22
R179 22
R229 10K
R228 100
R208 100
RN31
RN32
8P4R-22
DIMMCLK0
DIMMCLK1
DIMMCLK2
DIMMCLK3
DIMMCLK4
DIMMCLK5
DIMMCLK6
DIMMCLK7
DCLK3
DCLK2
DCLK6
DCLK7
DCLK5
DCLK0
DCLK1
DCLK4
7919
A+5.1" (7935)
A+7" (9808)
A (2787)
A (2850)
A (2790)
A (2786)
A (2807)
A (2799)
A (2786)
A (2793)
A+3.8" (6673)
16,22
13,14,16,18,22,33
13,14,16,18,22,33
key:The GMCH power on strapping I/F on DRAM I/F, so when enter STR mode that ICH loss power ,although PD# is asserted but all clock will not be keep greater than 3ms .
refer to FM-1776 page 134
ICH14M
C1108 X_10P
EMI
CN11
CN10
X_8P4C-10P
DCLK_WR
C66 X_5P
RESVD
C102 AUDIOPCLK X_10P
C97 ICHCLK66 X_10P
C80 GMCH3V66 X_10P
C98 ICHPCLK X_10P
C99 FWHPCLK X_10P
CN12
C68 ICH48M X_10P
C36 SIO48M X_10P
C124 ICH14M X_10P
C67 D48M X_10P
C55 APICCLK X_10P
C56 CPUHCLK X_10P
C57 GMCHHCLK X_10P
C77 AGP3V66 X_10P
Setting CLK Gen. Frequency by CPU stuff R184,R156
BSEL1#
BSEL0#
R184 10K
R156 10K
R207 X_10K
FS3 FS2 FS1 FS0 CPU SDRAM
0 0 0 0 66.8 100.2
0 0 0 1 100.2 100.2
0 0 1 0 133.6 133.6
0 0 1 1 133.6 100.2
Micro-Star
Title
MS-6315
Rev
100
Document Number
Clock Synthesizer
Last Revision Date:
Tuesday, August 01, 2000
Sheet 7 of 34

82815, PART 1 : HOST INTERFACE

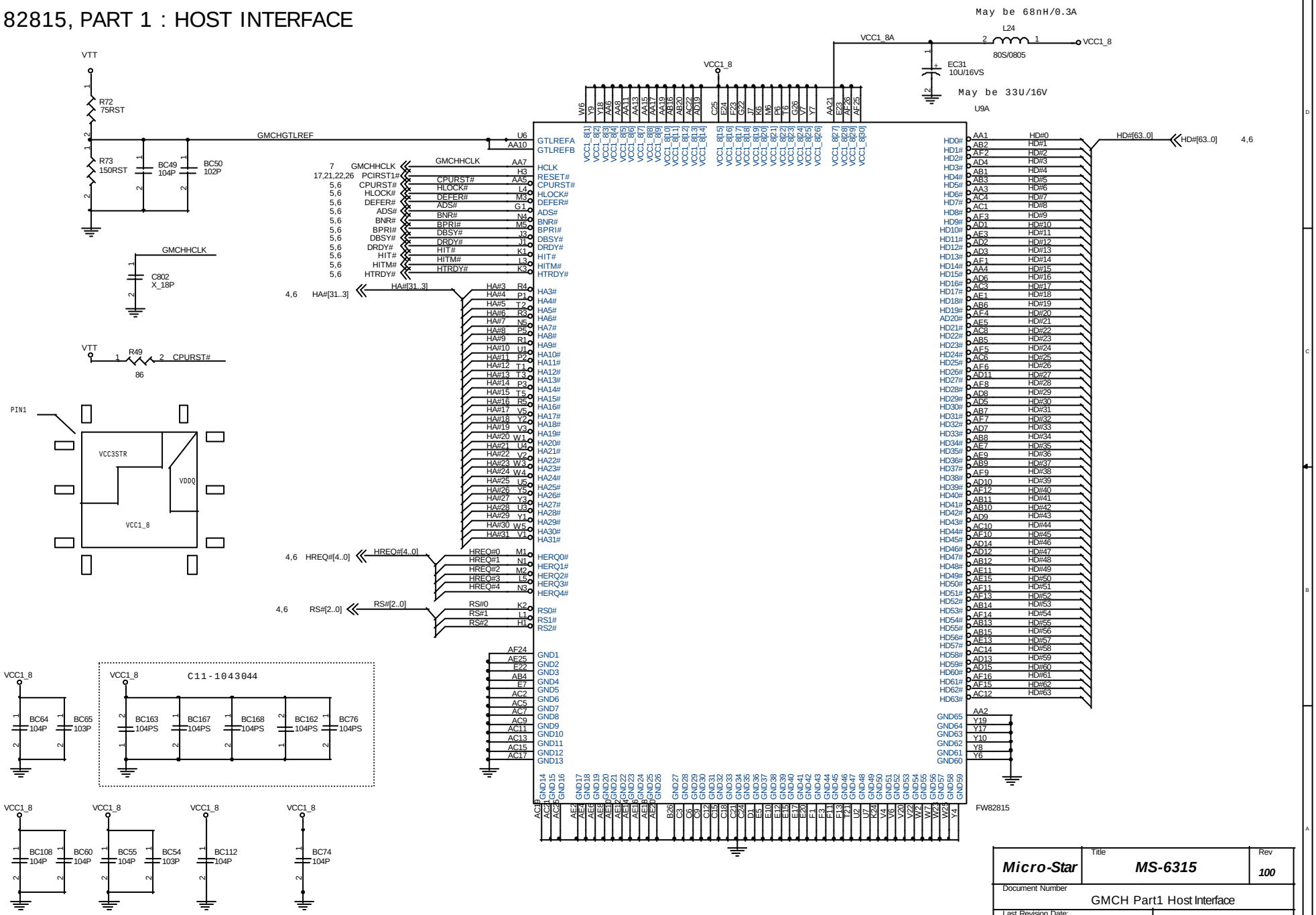

Micro-Star	Title: MS-6315		Rev: 100
Document Number: GMCH Part1 Host Interface			
Last Revision Date: Tuesday, August 01, 2000		Sheet 8 of 34	

GMCH, PART 2 : SYSTEM MEMORY

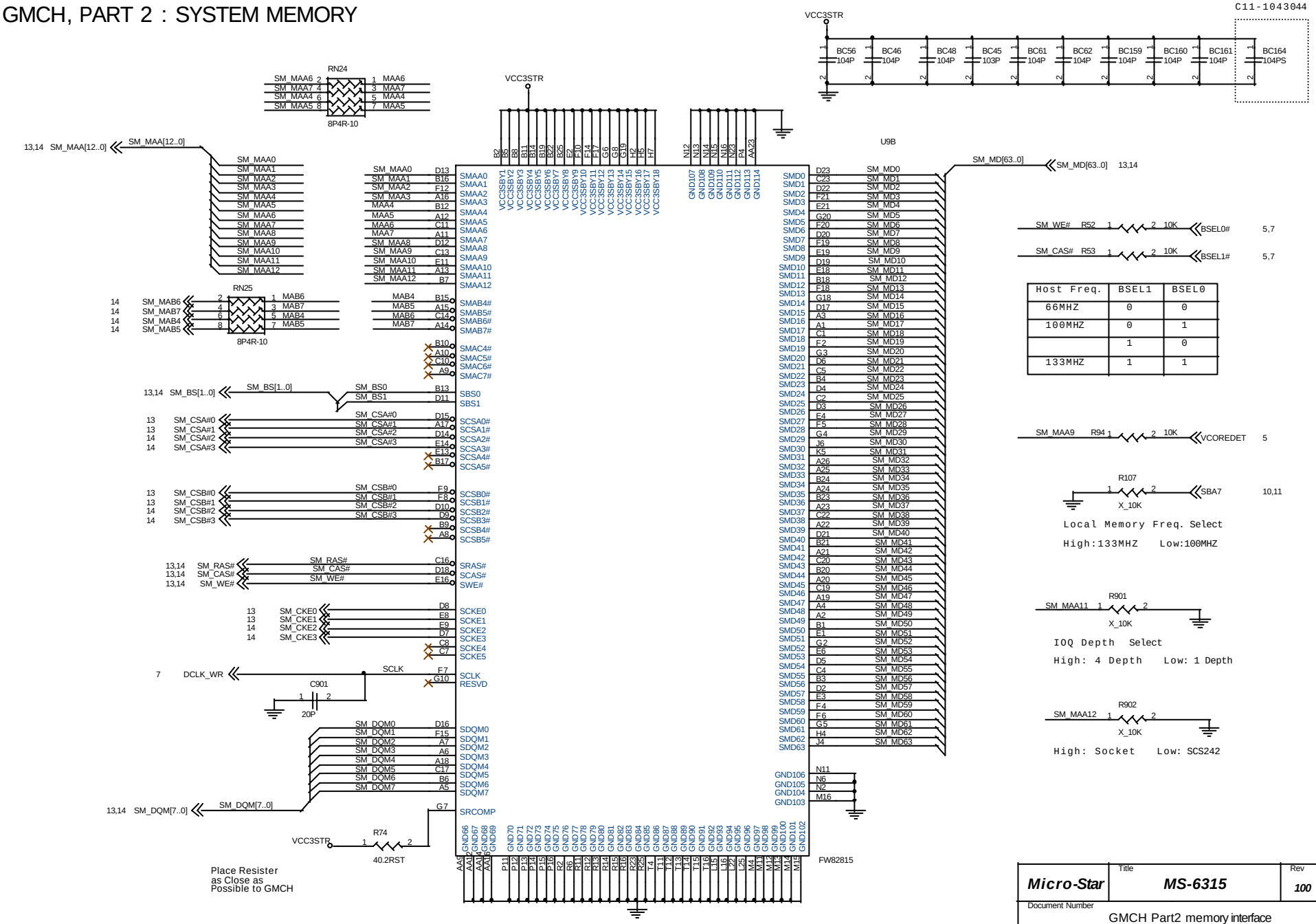

GMCH PART 3 : AGP & VIDEO Interface & HUB link

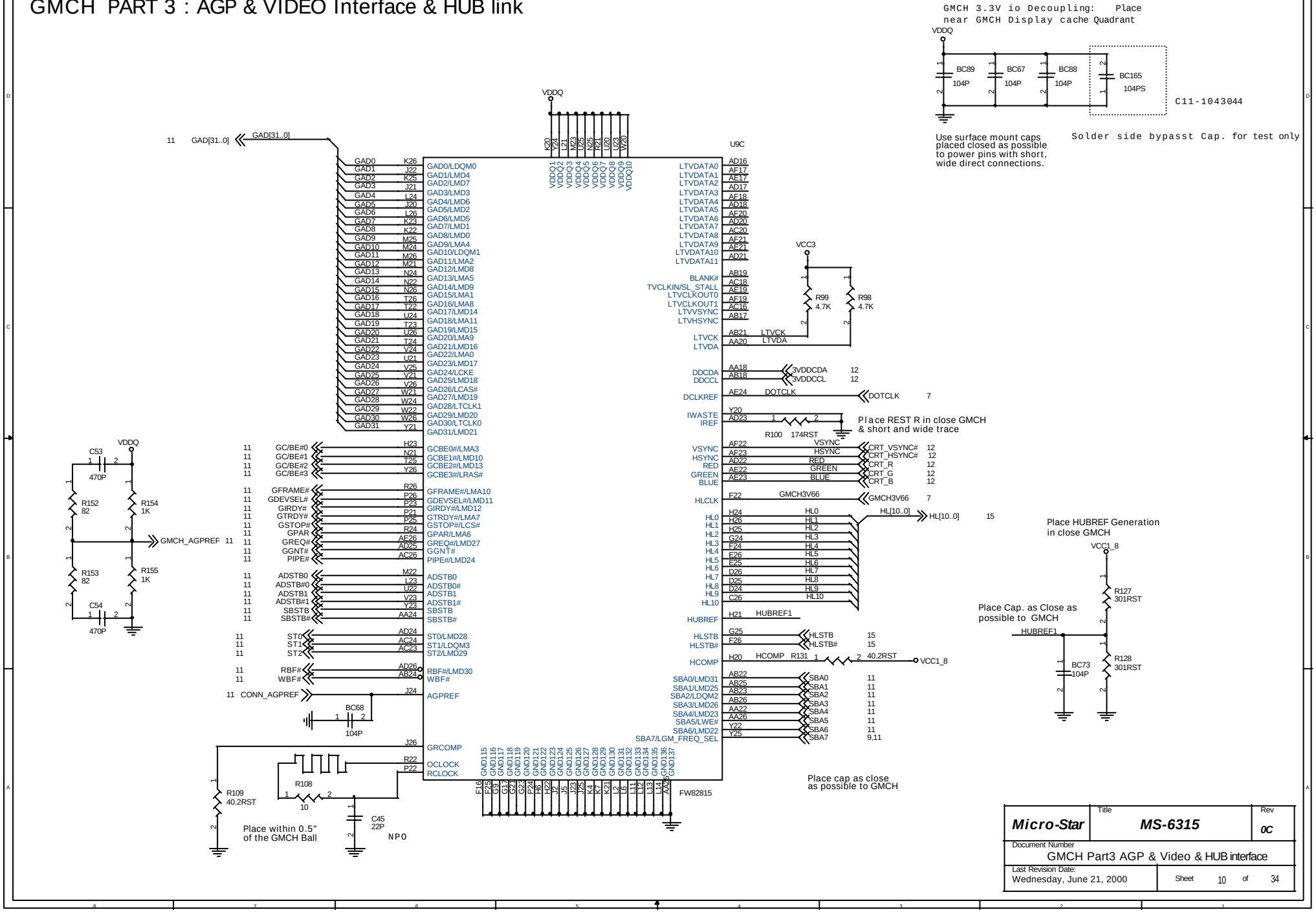

Micro-Star	Title: MS-6315	Rev: 0C
Document Number: GMCH Part3 AGP & Video & HUB interface		
Last Revision Date: Wednesday, June 21, 2000	Sheet 10 of 34	

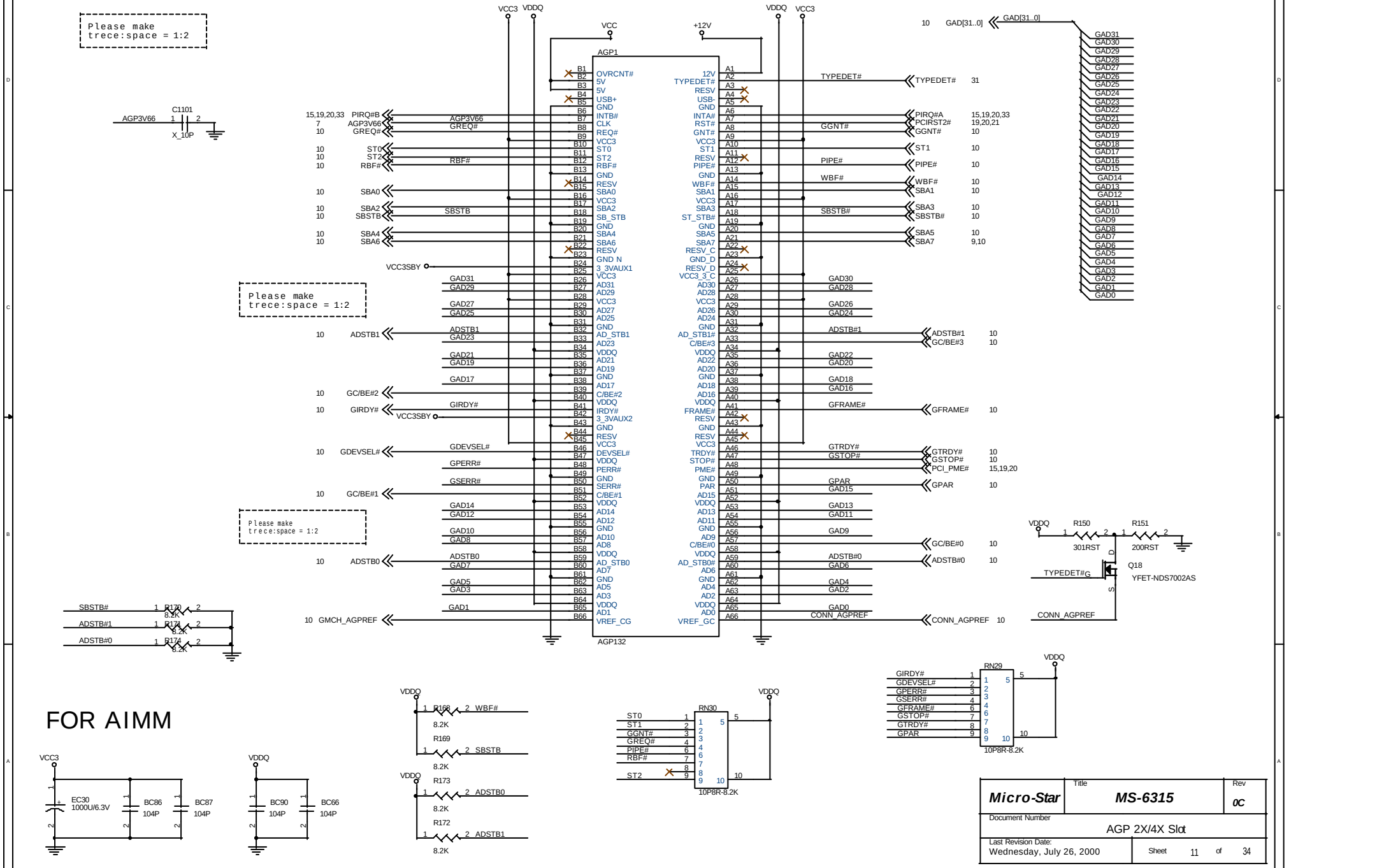

Micro-Star	Title: MS-6315	Rev: 0C
	Document Number: AGP 2X/4X Slot	
	Last Revision Date: Wednesday, July 26, 2000	Sheet 11 of 34

Video Connector

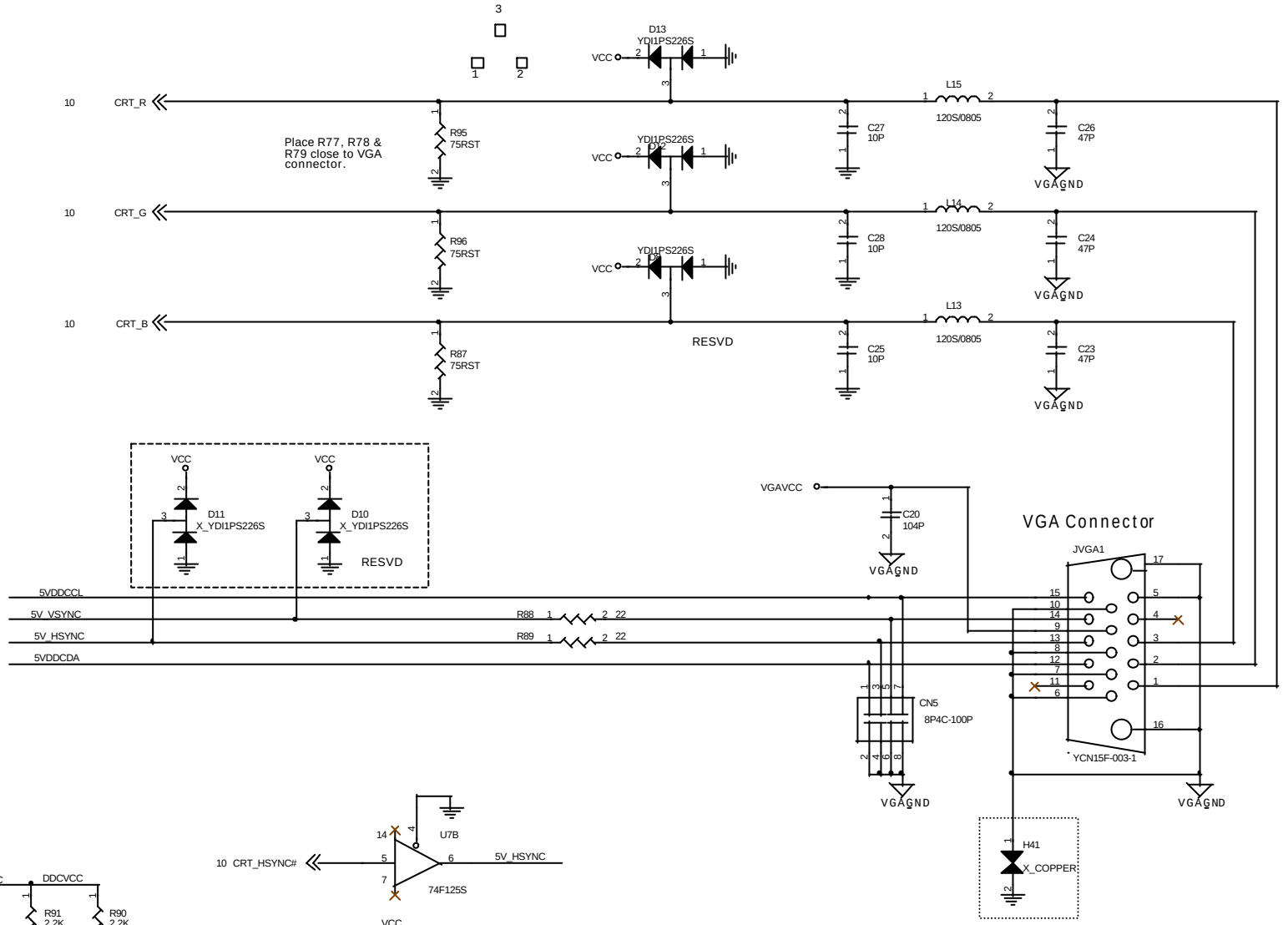

5V to 3.3V Translation/Isolation

Micro-Star	Title: MS-6315		Rev: 0C
	Document Number: Video Connector		
	Last Revision Date: Thursday, June 22, 2000	Sheet 12 of 34	

DIMM1

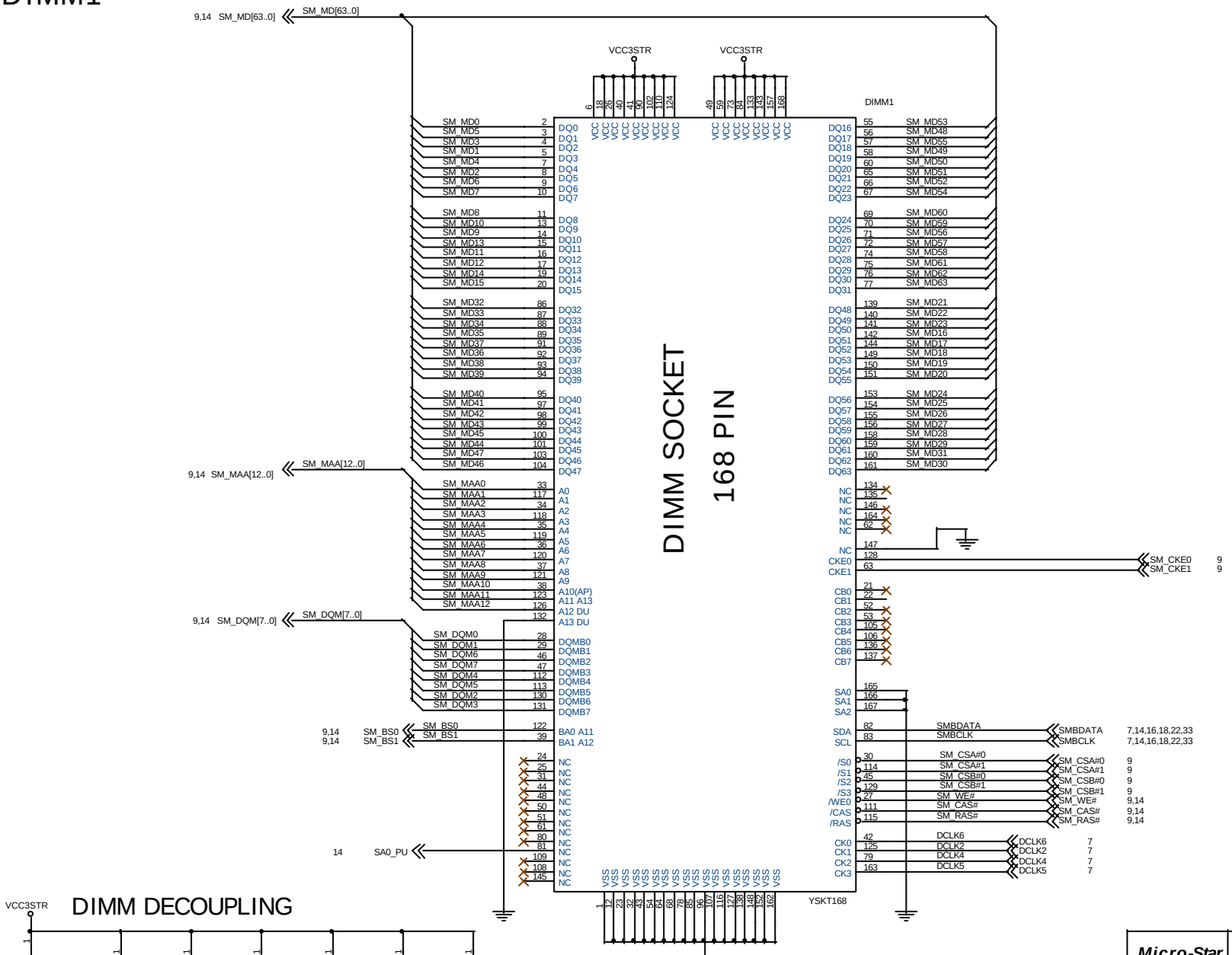

DIMM DECOUPLING

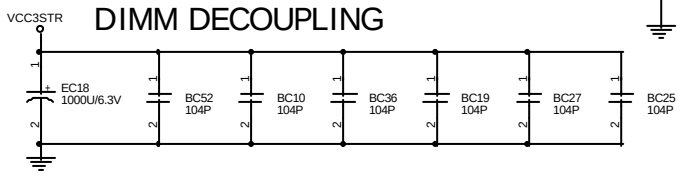

Micro-Star	Title: MS-6315	Rev: 0C
Document Number: System Memory: DIMM1		
Last Revision Date: Wednesday, June 21, 2000	Sheet 13 of 34	

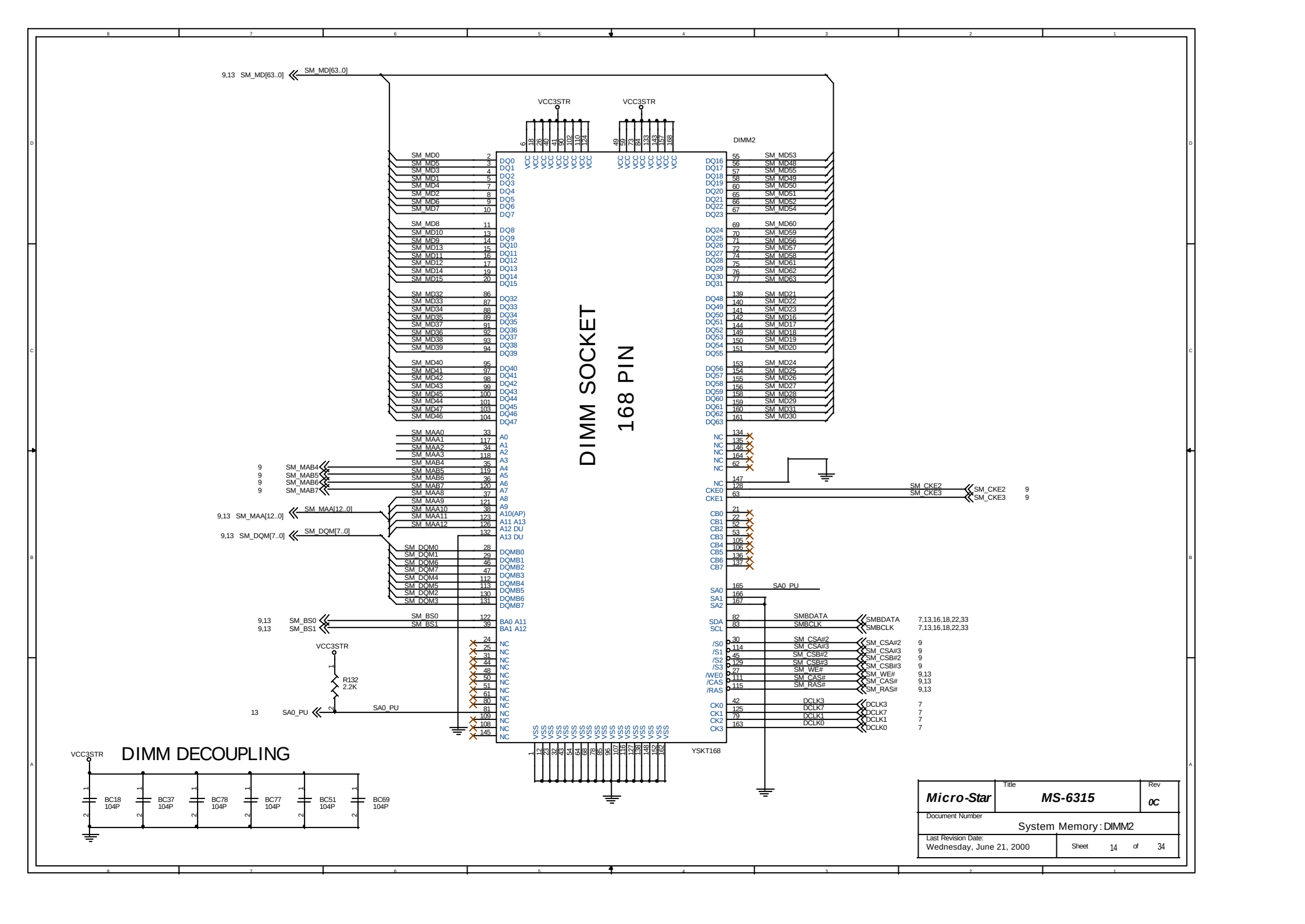
DIMM SOCKET
168 PIN
DIMM2
YSKT168
VCC3STR
SM_MD[63..0]
SM_MAA[12..0]
SM_DQM[7..0]
SM_MAB4
SM_MAB5
SM_MAB6
SM_MAB7
SM_BS0
SM_BS1
SA0_PU
R132
2.2K
SMBDATA
SMBCLK
SM_CKE2
SM_CKE3
SM_CSA#2
SM_CSA#3
SM_CSB#2
SM_CSB#3
SM_WE#
SM_CAS#
SM_RAS#
DCLK3
DCLK7
DCLK1
DCLK0
DIMM DECOUPLING
BC18 104P
BC37 104P
BC78 104P
BC77 104P
BC51 104P
BC69 104P
Micro-Star
MS-6315
0C
System Memory: DIMM2
Wednesday, June 21, 2000
Sheet 14 of 34

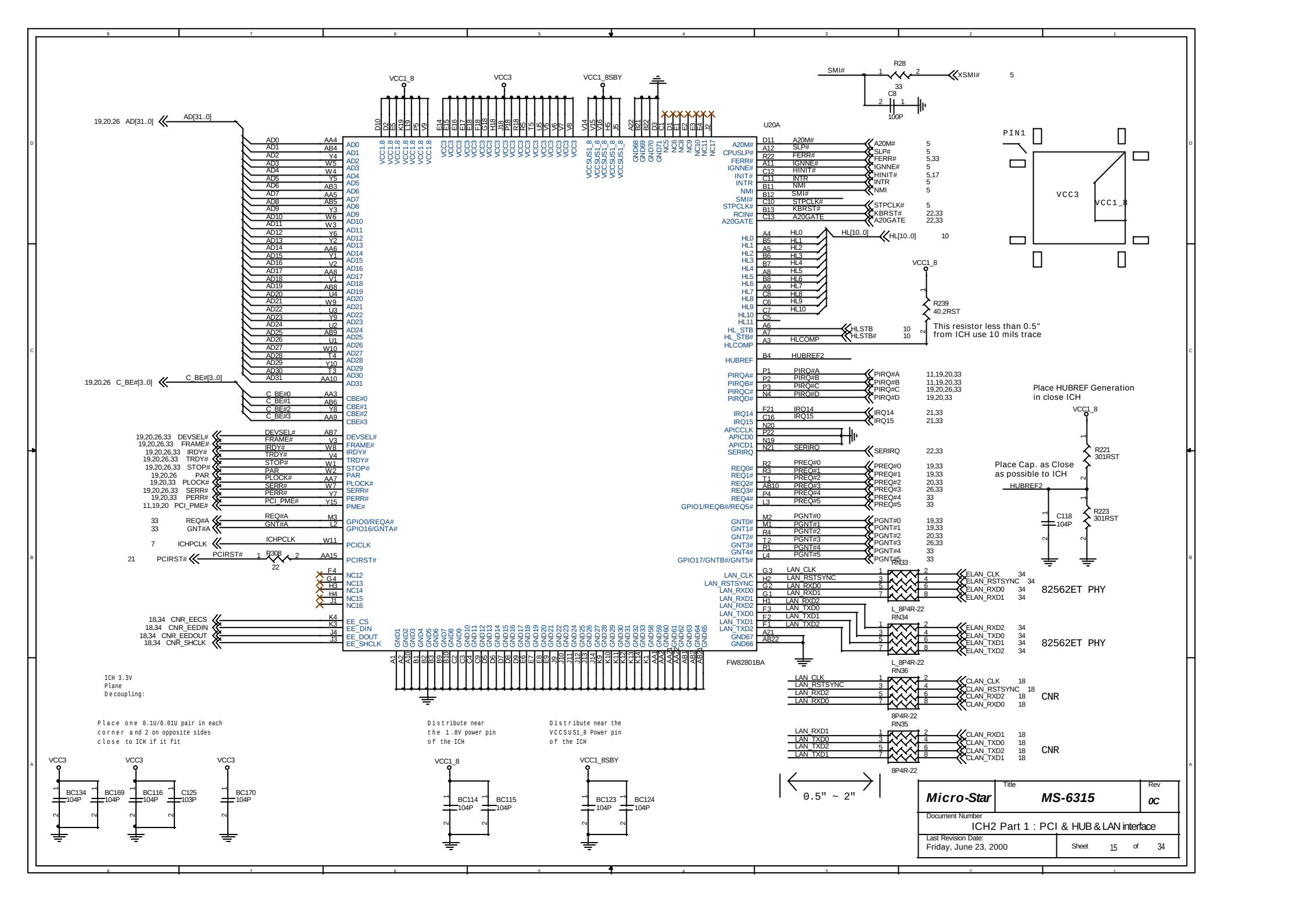
VCC1_8
VCC3
VCC1_8SBY
SMI#
R28
33
XSMI#
C8
100P
PIN1
U20A
FW82801BA
AD[31..0]
C_BE#[3..0]
HL[10..0]
R239
40.2RST
This resistor less than 0.5" from ICH use 10 mils trace
Place HUBREF Generation in close ICH
Place Cap. as Close as possible to ICH
R221
301RST
R223
301RST
C118
104P
HUBREF2
82562ET PHY
82562ET PHY
CNR
CNR
RN33
RN34
RN35
RN36
L_8P4R-22
8P4R-22
ICH 3.3V Plane Decoupling:
Place one 0.1U/0.01U pair in each corner and 2 on opposite sides close to ICH if it fit
Distribute near the 1.8V power pin of the ICH
Distribute near the VCCSUS1_8 Power pin of the ICH
BC134 104P
BC169 104P
BC116 104P
C125 103P
BC170 104P
BC114 104P
BC115 104P
BC123 104P
BC124 104P
0.5" ~ 2"
Micro-Star
MS-6315
0C
ICH2 Part 1 : PCI & HUB & LAN interface
Friday, June 23, 2000
Sheet 15 of 34

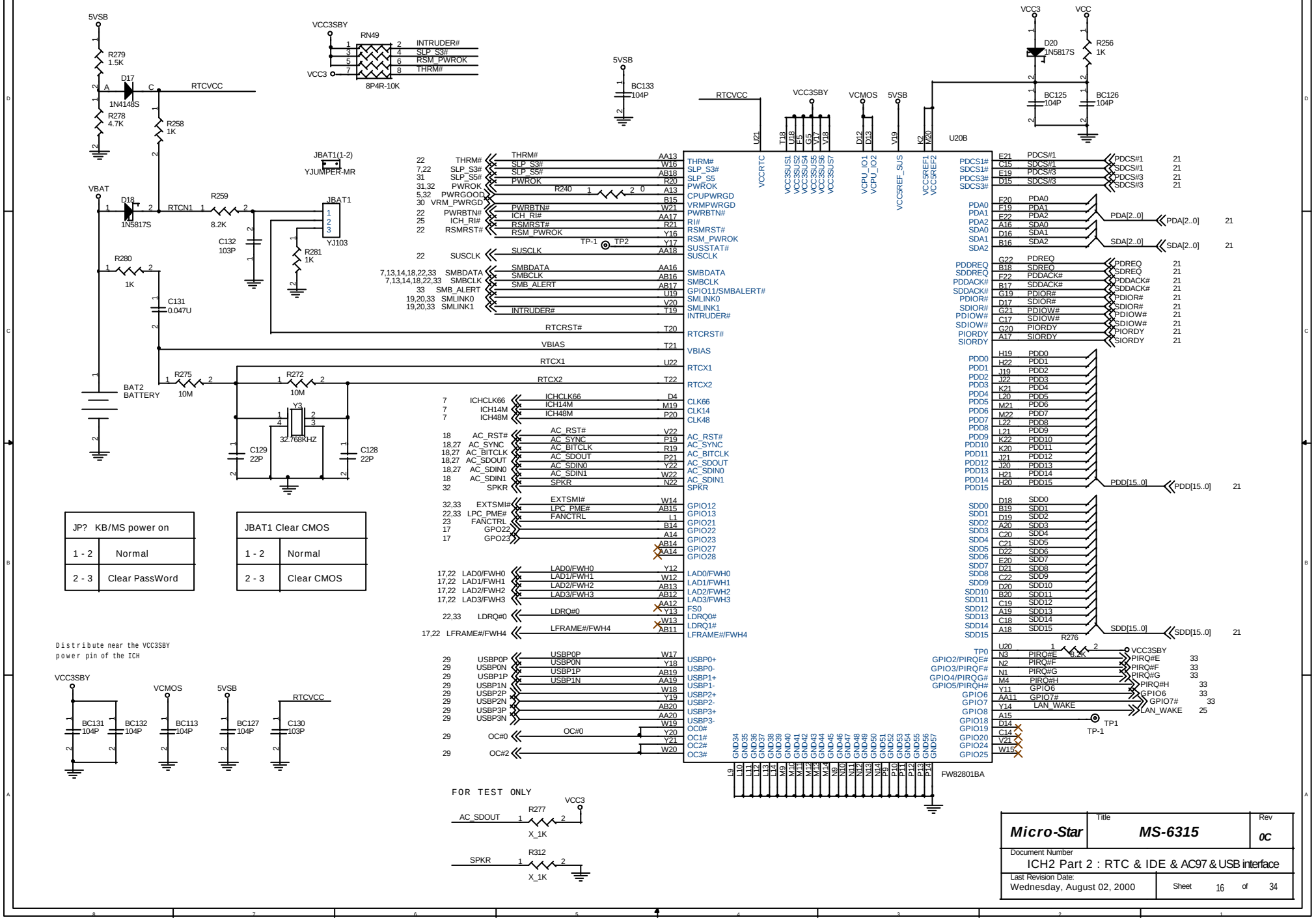

Micro-Star	Title: MS-6315
	Rev: 0C
Document Number	ICH2 Part 2 : RTC & IDE & AC97 & USB interface
Last Revision Date: Wednesday, August 02, 2000	Sheet 16 of 34

Firware Hub (FWH)

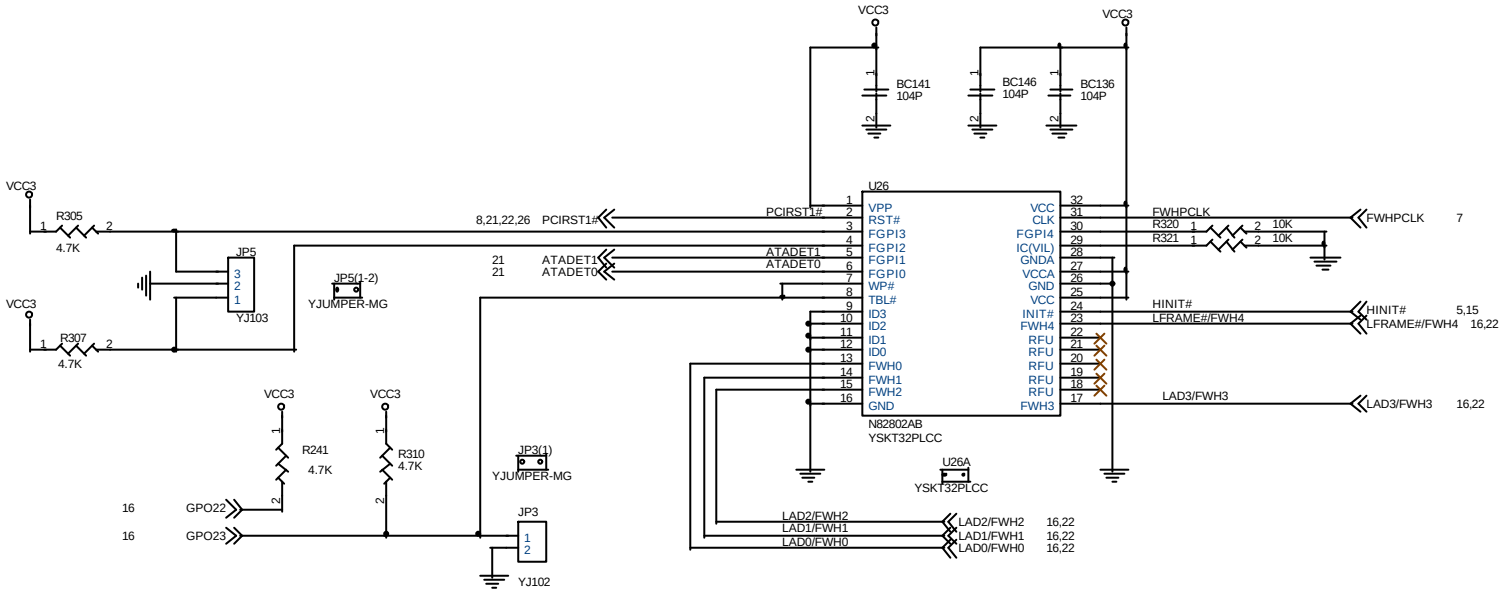

JP5 BIOS Update Configuration	
1 - 2	Normal Mode
2 - 3	Boot auto clear CMOS
OPEN	Flash from FDD

*

JP3 BIOS Update	
SHORT	Locked
OPEN	Unlocked

Micro-Star	Title: MS-6315	Rev: 0C
Document Number: Firware HUB (FWH)		
Last Revision Date: Wednesday, June 21, 2000	Sheet 17 of 34	

CNR RISER

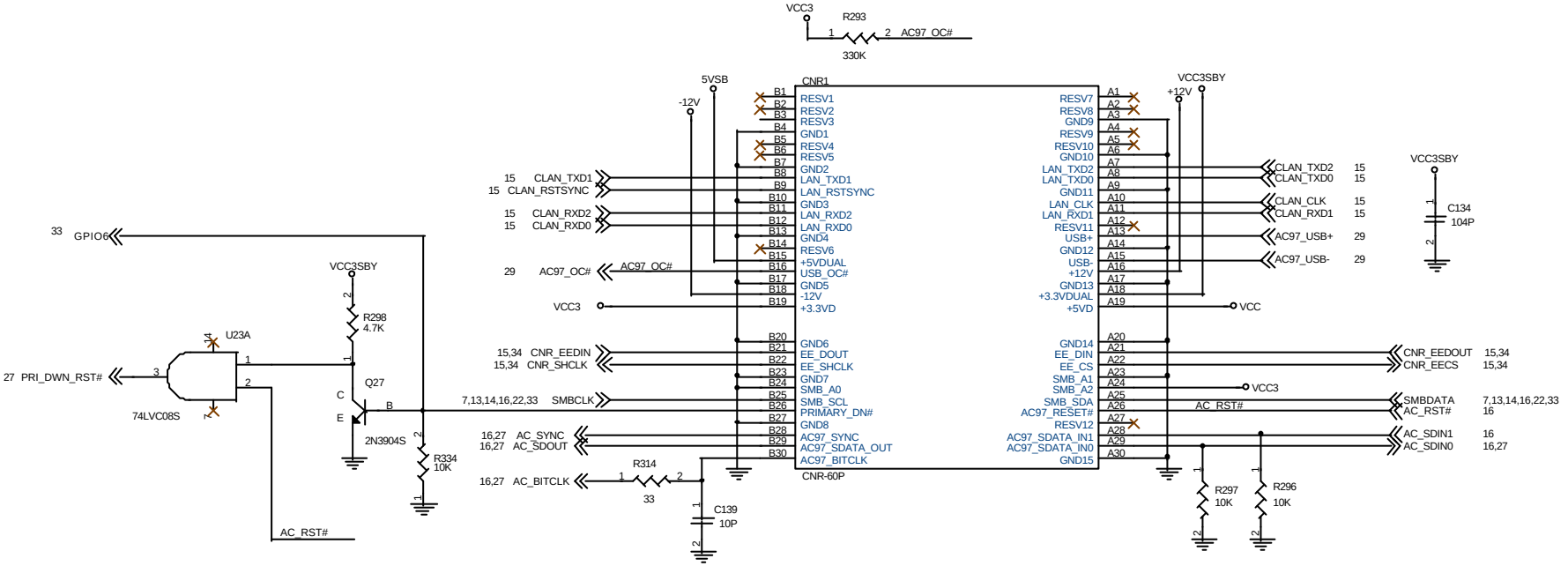

JP4	AUDIO DOWN
1 - 2	Enable onboard audio codec
2 - 3	Disable onboard audio codec

Micro-Star	Title: MS-6315	Rev: 0C
Document Number: CNR Slot		
Last Revision Date: Tuesday, August 01, 2000	Sheet 18 of 34	

PCI Connectors

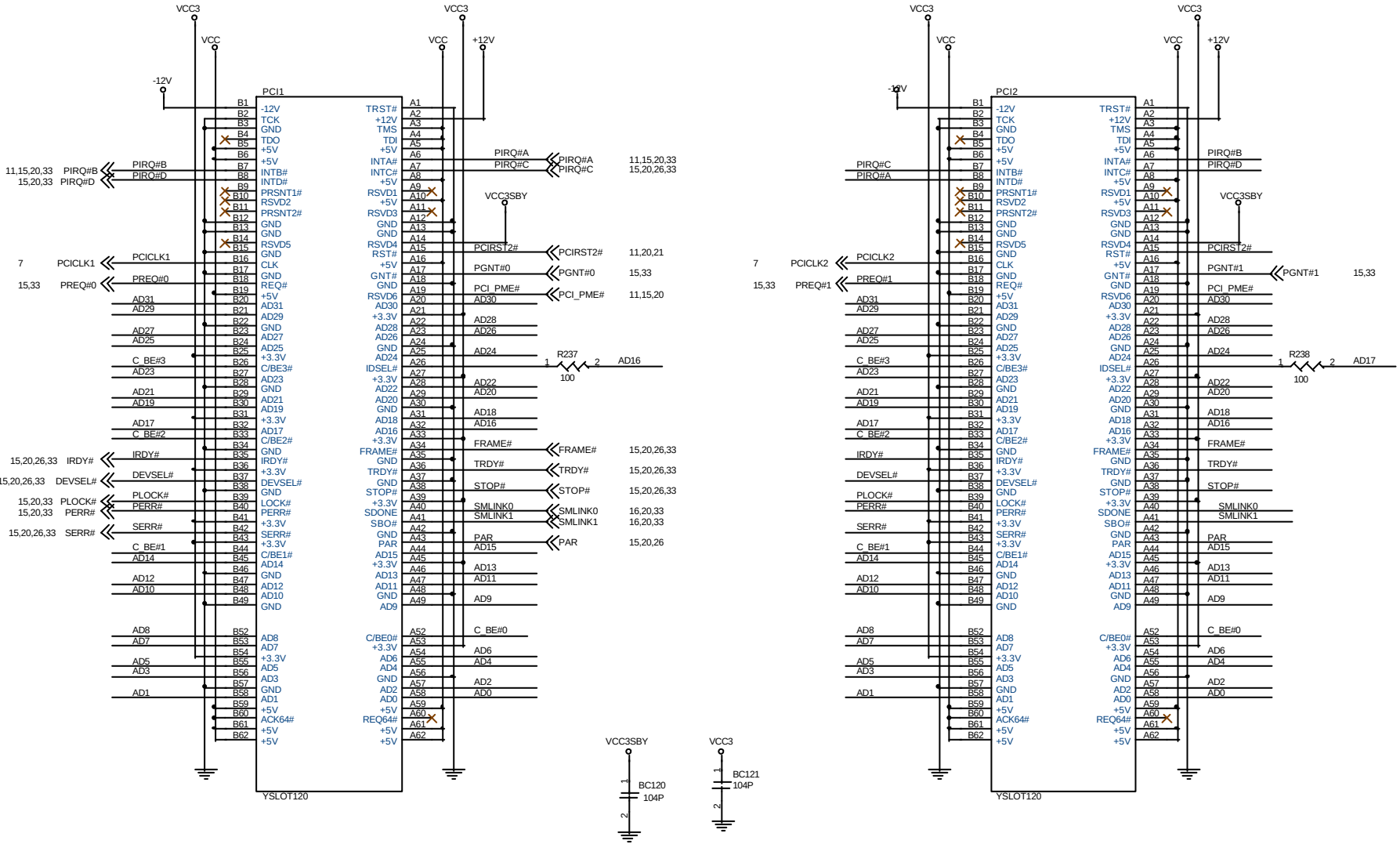

15,20,26 AD[31..0] ← AD[31..0]

15,20,26 C_BE#[3..0] ← C_BE#[3..0]

Micro-Star	Title: MS-6315	Rev: 0C
Document Number: PCI Slot 1 & 2		
Last Revision Date: Friday, June 23, 2000	Sheet 19 of 34	

PCI Slot

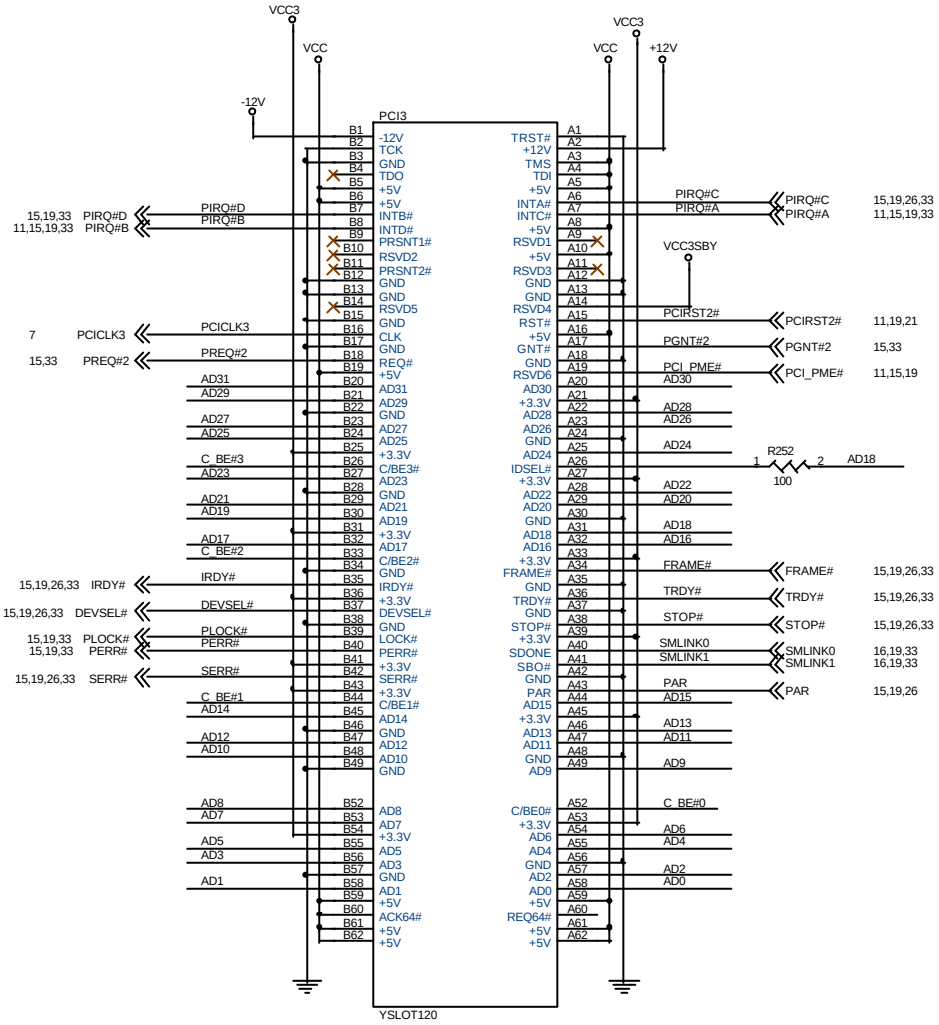

15,19,26 AD[31..0] AD[31..0]

15,19,26 C_BE#[3..0] C_BE#[3..0]

Micro-Star	Title: MS-6315	Rev: 0C
Document Number: PCI Slot 3		
Last Revision Date: Wednesday, June 21, 2000	Sheet 20 of 34	

ATA66 IDE CONNECTORS

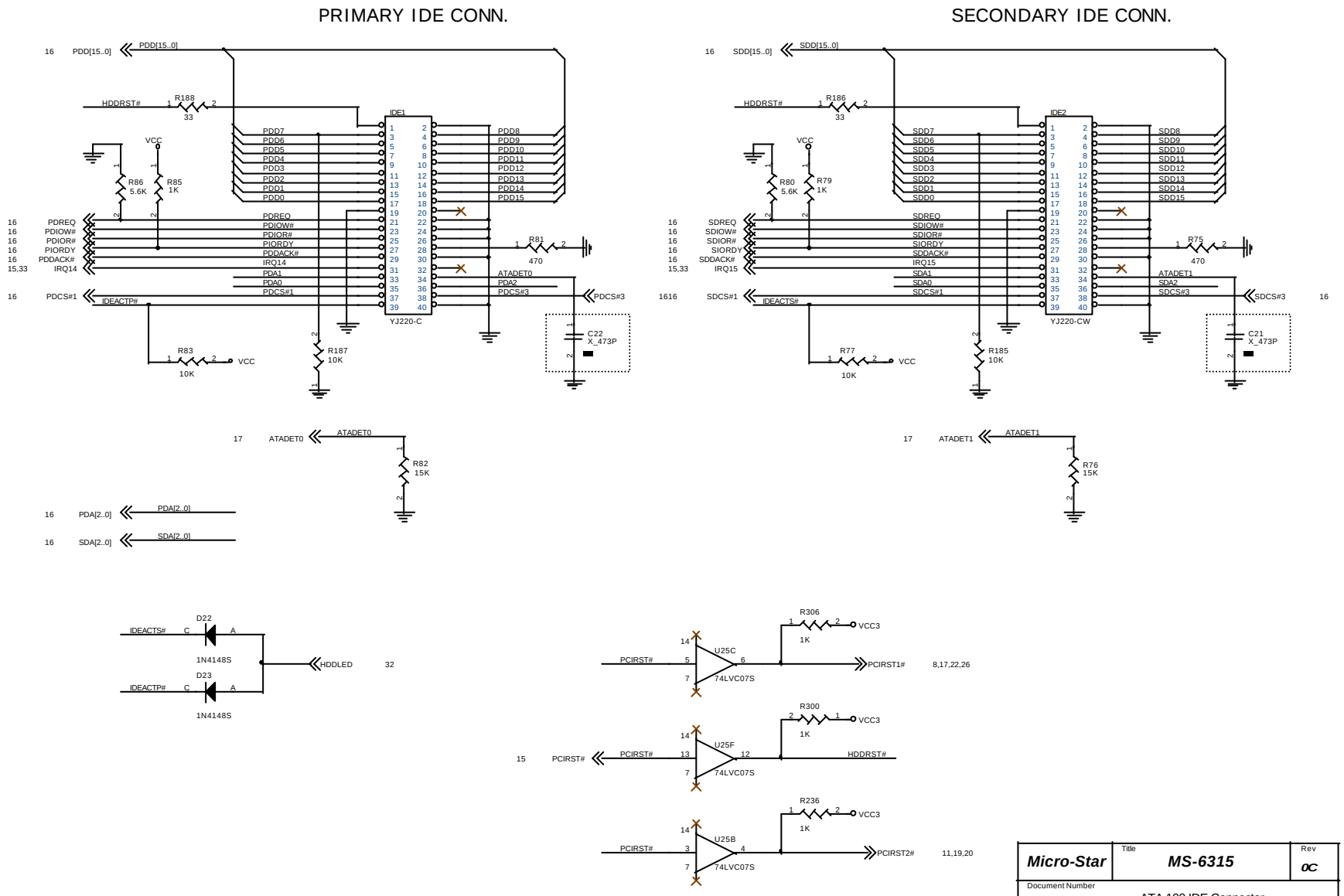

Micro-Star	Title: MS-6315		Rev: 0C
Document Number: ATA 100 IDE Connector			
Last Revision Date: Friday, July 21,2000		Sheet 21 of 34	

Super I/O

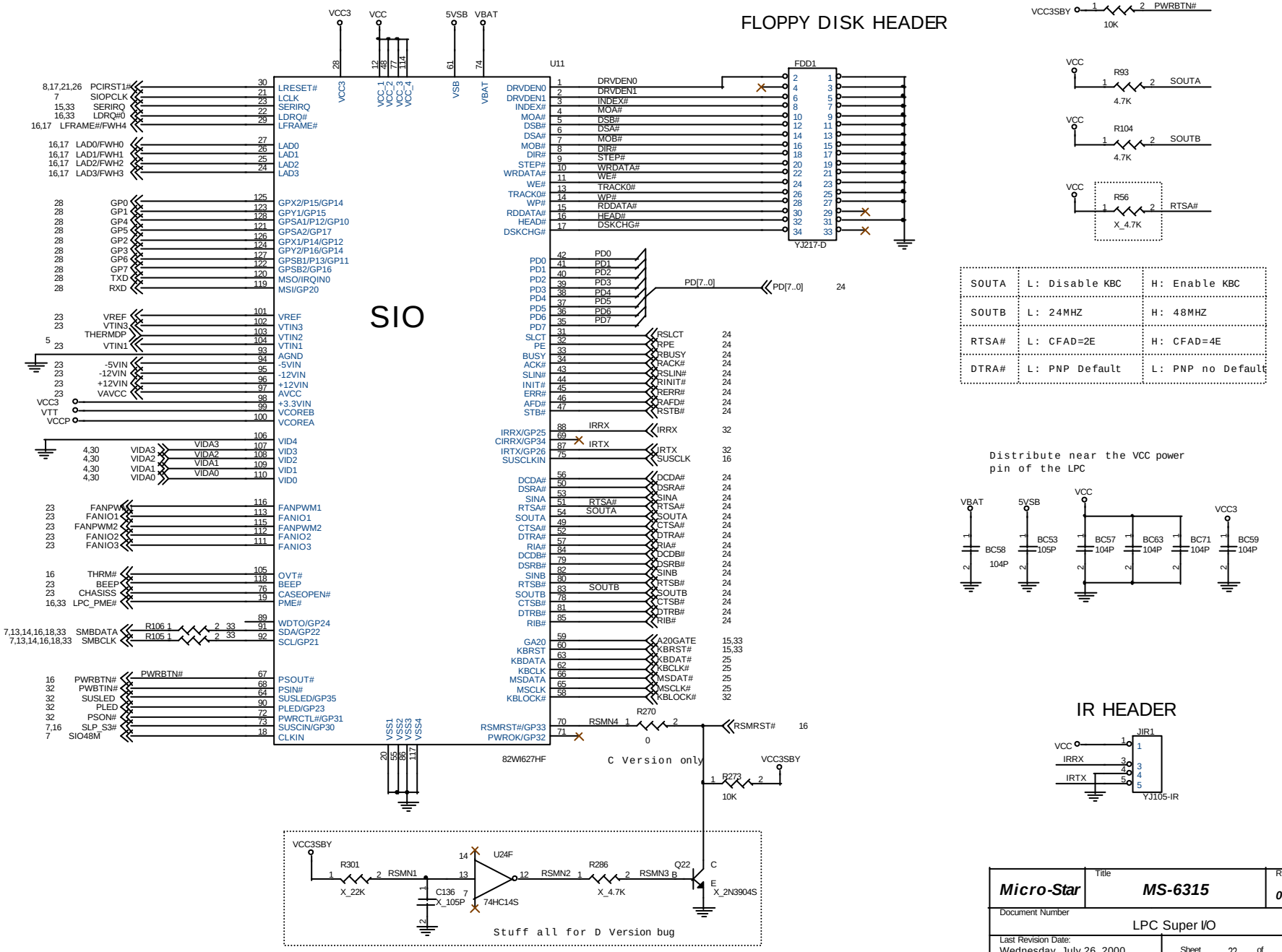

Micro-Star	Title: MS-6315	Rev: 0C
	Document Number: LPC Super I/O	
Last Revision Date: Wednesday, July 26, 2000	Sheet 22 of 34	

Hardware Monitor

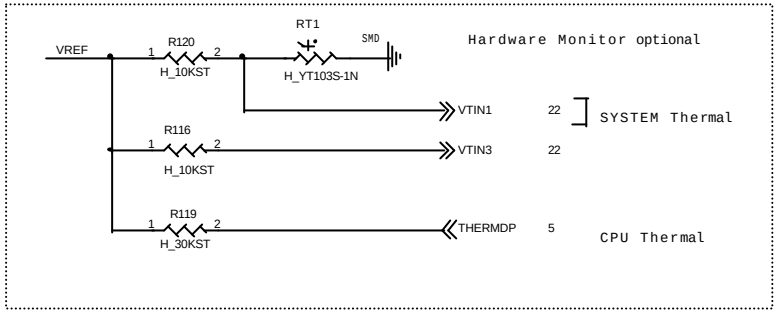

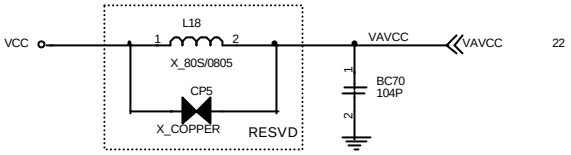

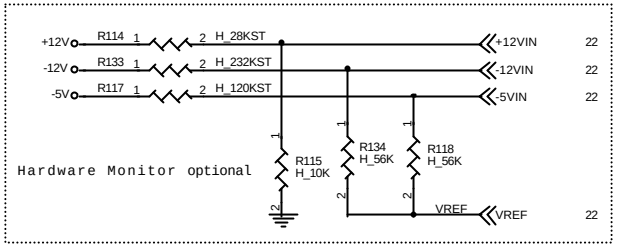

Chasiss Intrusion Header

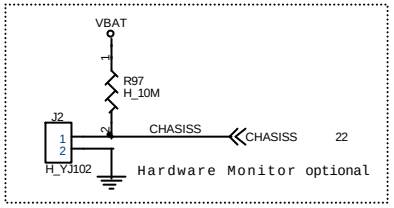

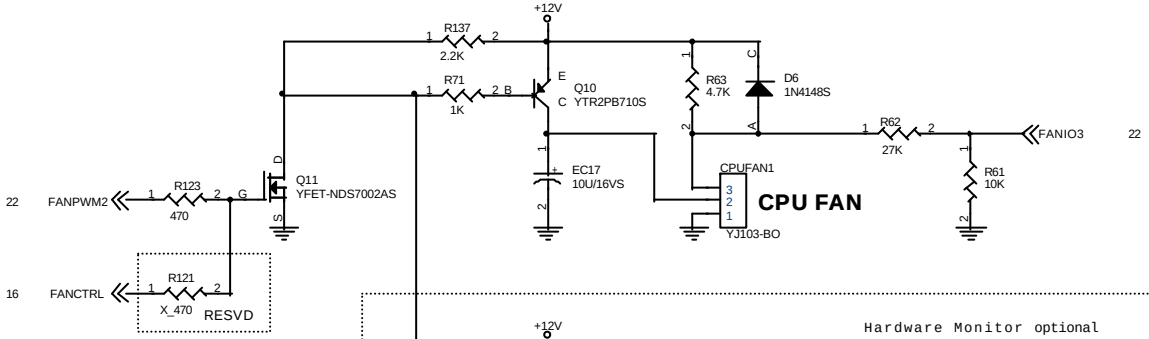

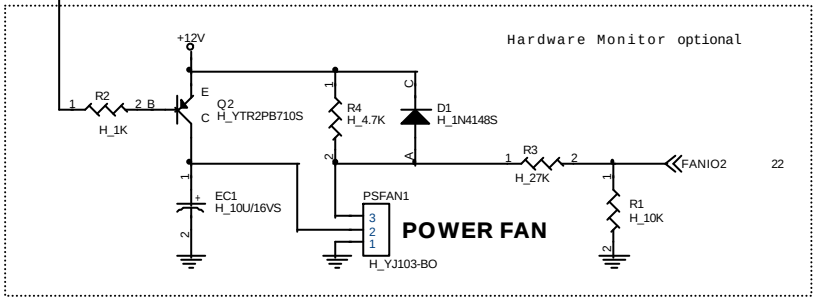

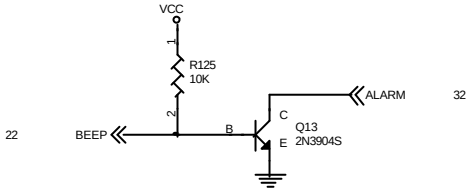

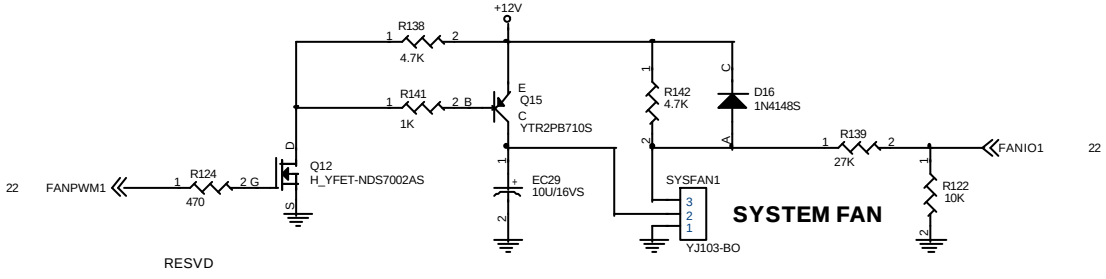

Micro-Star	Title: MS-6315	Rev: 0C
Document Number: Hardware Monitor		
Last Revision Date: Friday, July 21, 2000	Sheet 23 of 34	

Parallel Port / COM1port & COM2 Header

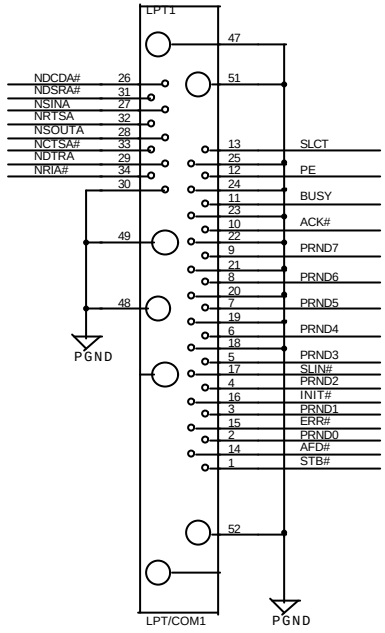

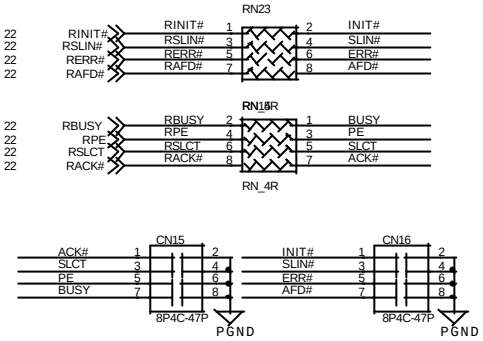

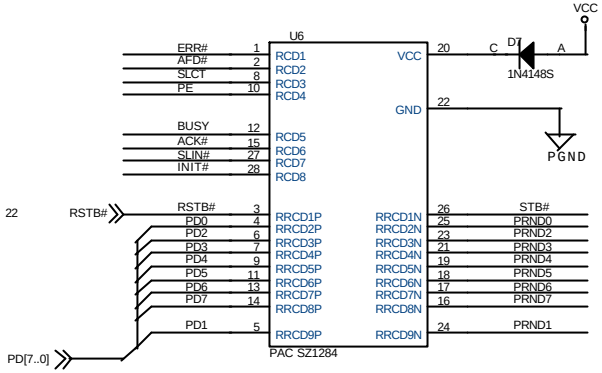

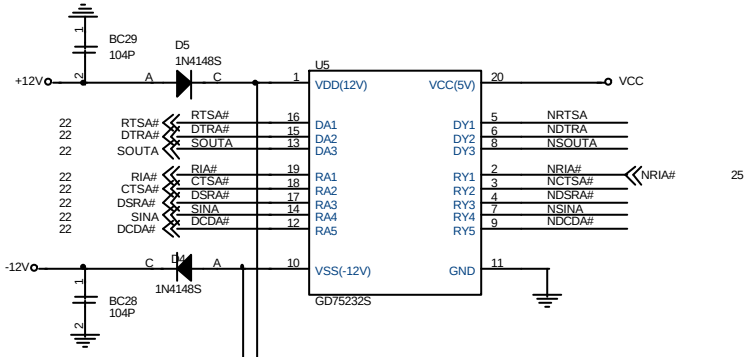

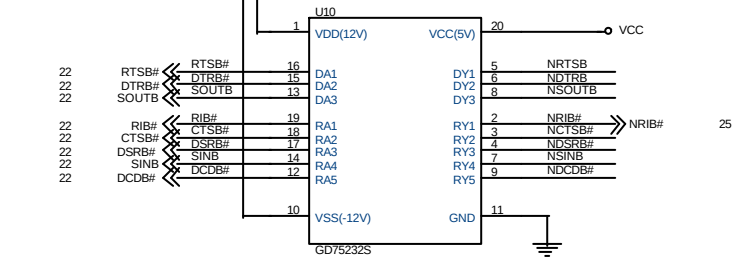

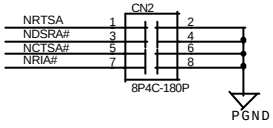

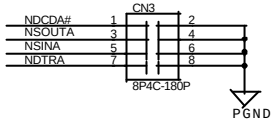

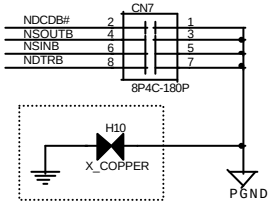

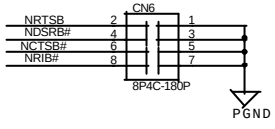

COM2 HEADER

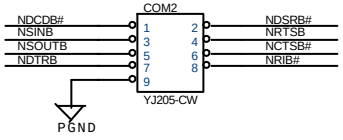

Micro-Star	Title: MS-6315	Rev: 0C
Document Number: Parallel Port Header		
Last Revision Date: Friday, September 01, 2000	Sheet 24 of 34	

KEYBOARD/MOUSE PORTS

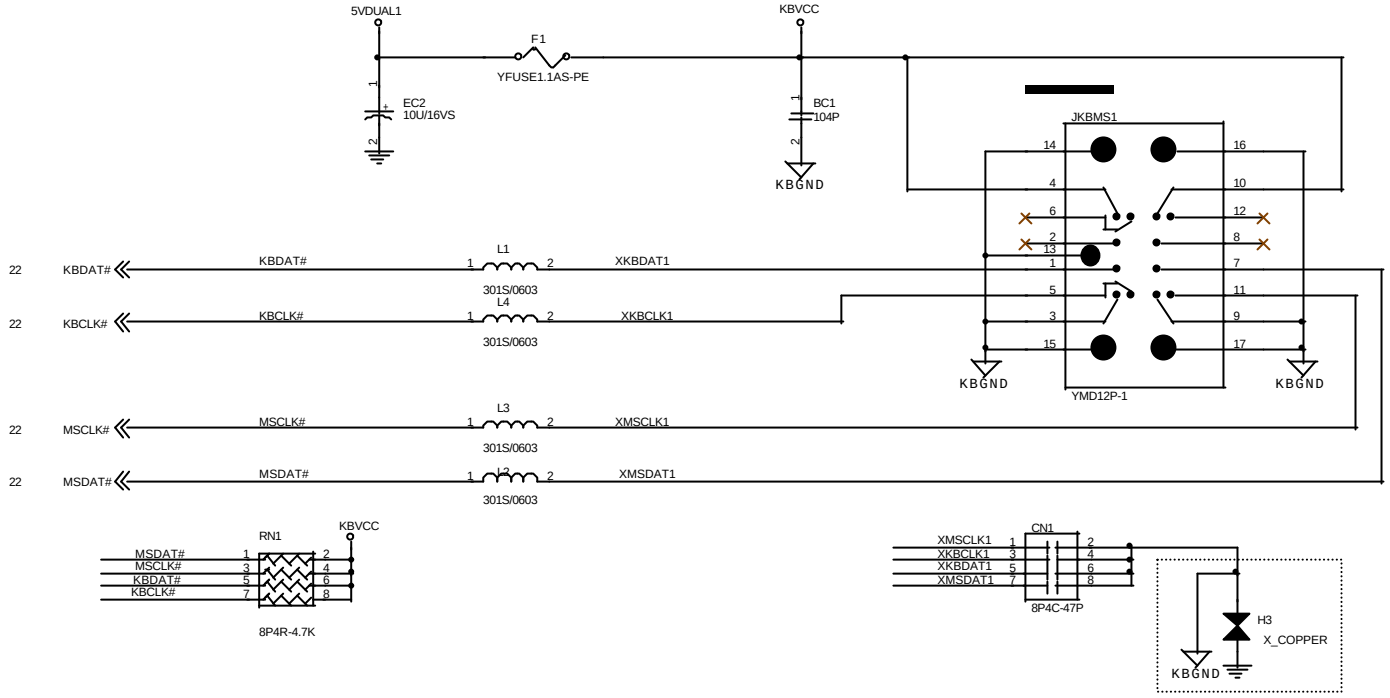

LAN WAKEUP HEADER

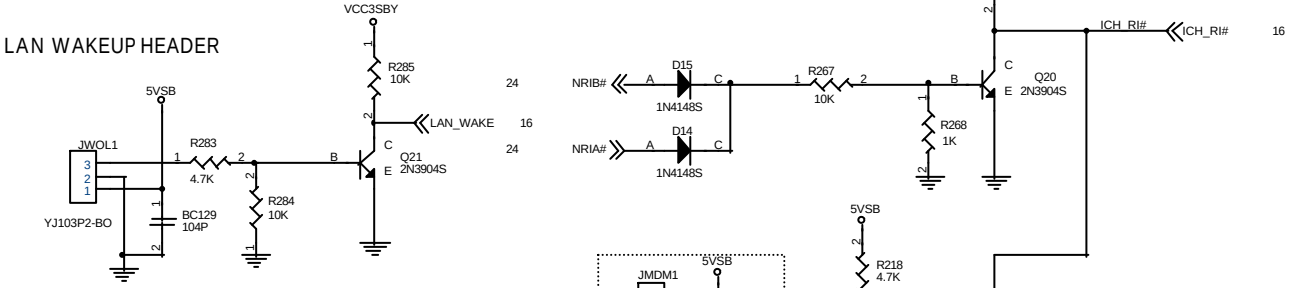

INTERNAL MODEM WAKEUP HEADER

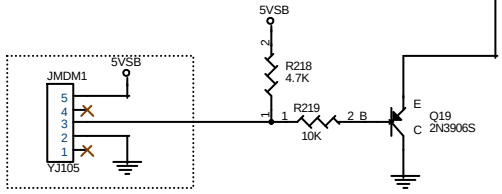

Micro-Star	Title: MS6315	Rev: 0C
	Document Number: Keyboard board / Mouse port	
Last Revision Date: Thursday, June 29, 2000	Sheet 25 of 34	

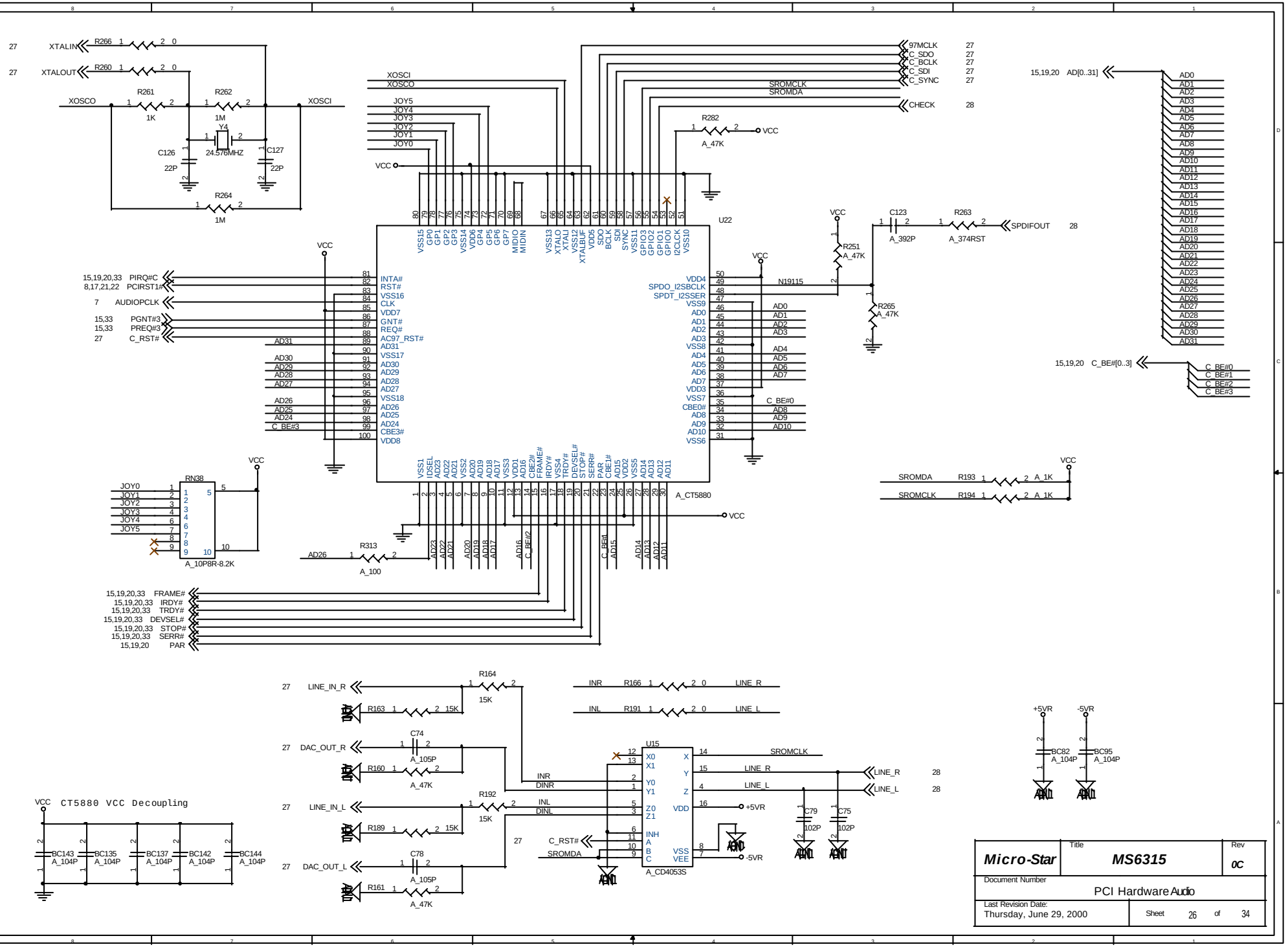

Micro-Star	Title: MS6315	Rev: 0C
Document Number: PCI Hardware Audio		
Last Revision Date: Thursday, June 29, 2000	Sheet 26 of 34	

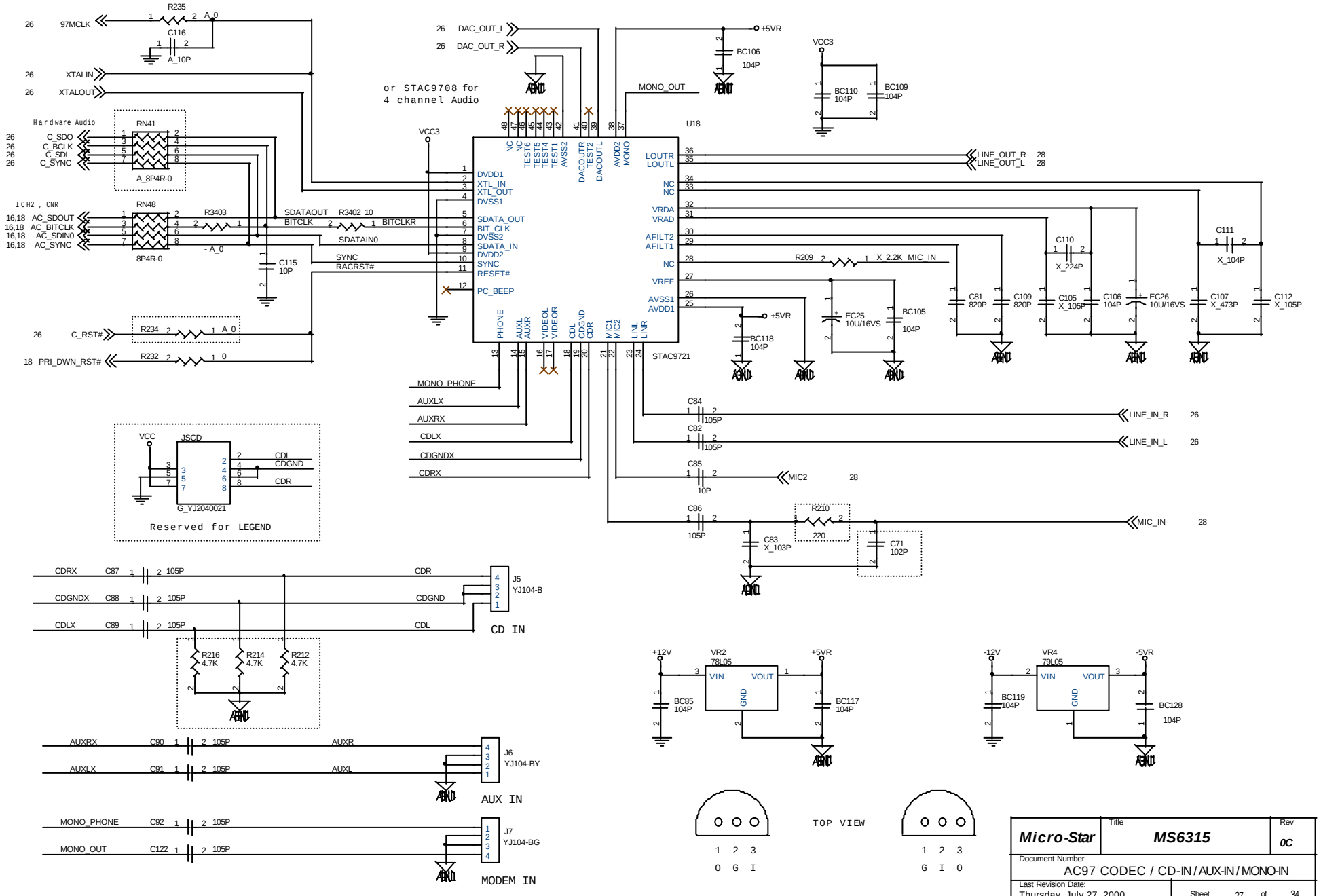
or STAC9708 for
4 channel Audio
Hardware Audio
ICH2 , CNR
Reserved for LEGEND
CD IN
AUX IN
MODEM IN
TOP VIEW
STAC9721
U18
Micro-Star
MS6315
0C
AC97 CODEC / CD-IN / AUX-IN / MONO-IN
Thursday, July 27, 2000
Sheet 27 of 34

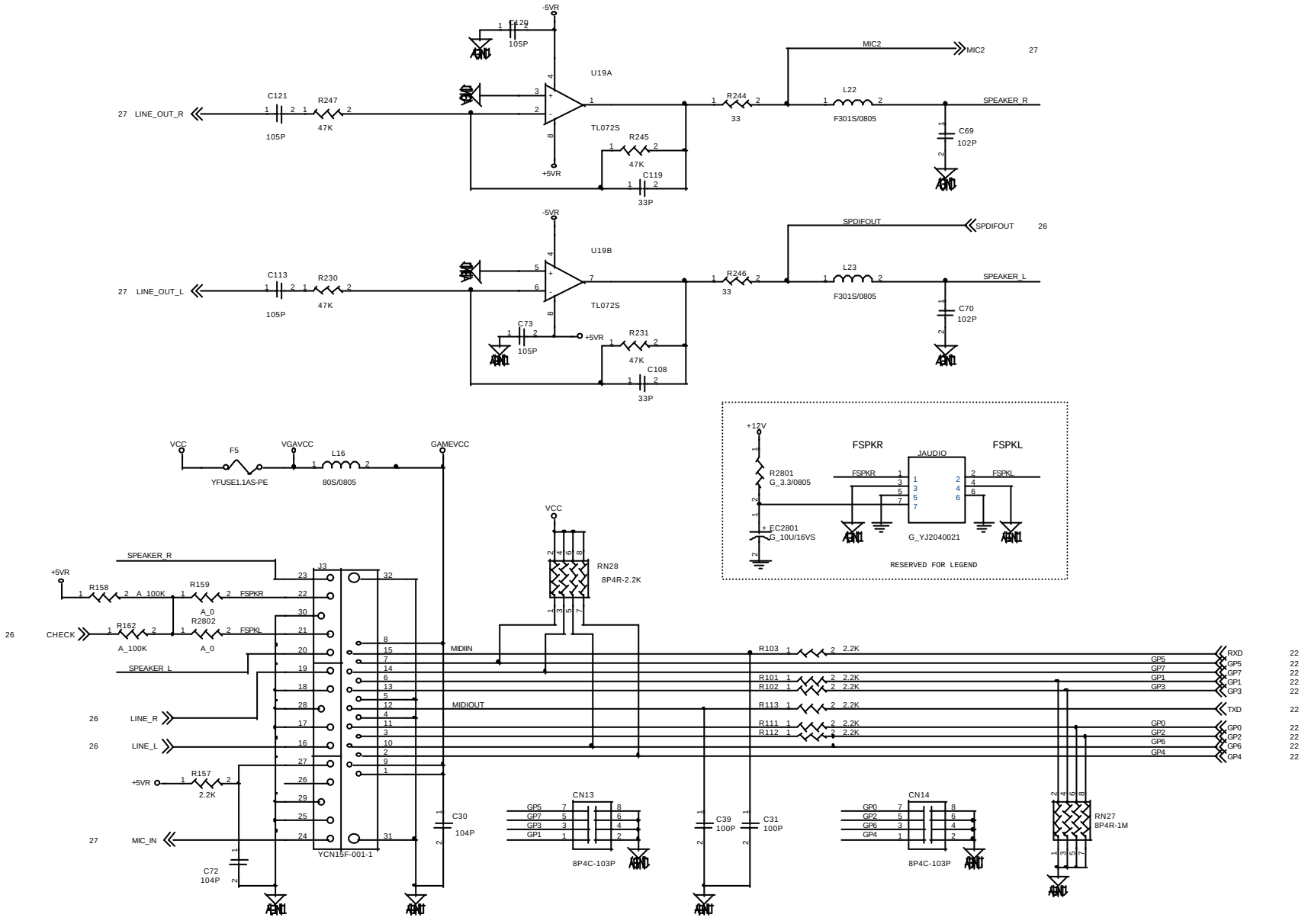

GAME PORT HEADER

Micro-Star	Title: MS6315	Rev: 0C
Document Number: Audio Amplifier & Game port Connector		
Last Revision Date: Wednesday, July 26,2000	Sheet 28 of 34	

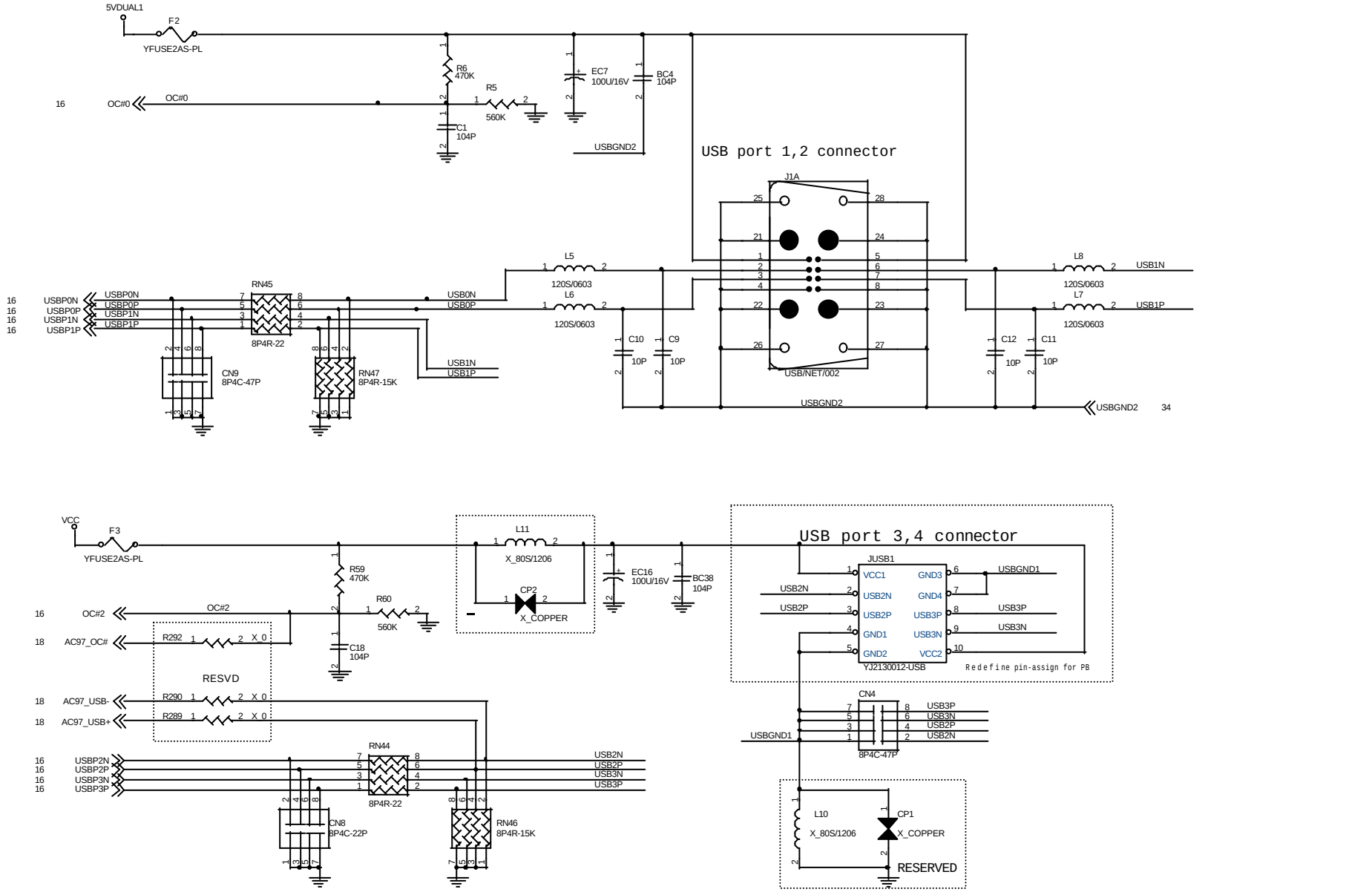

Micro-Star	Title: MS6315	Rev: 0C
Document Number: USB Connector		
Last Revision Date: Thursday, June 29, 2000	Sheet 29 of 34	

VRM 8.4

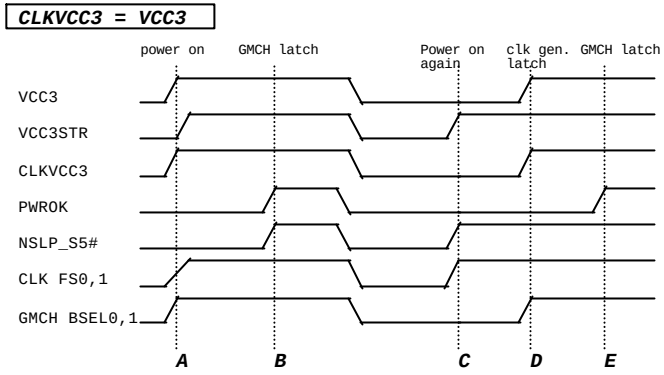

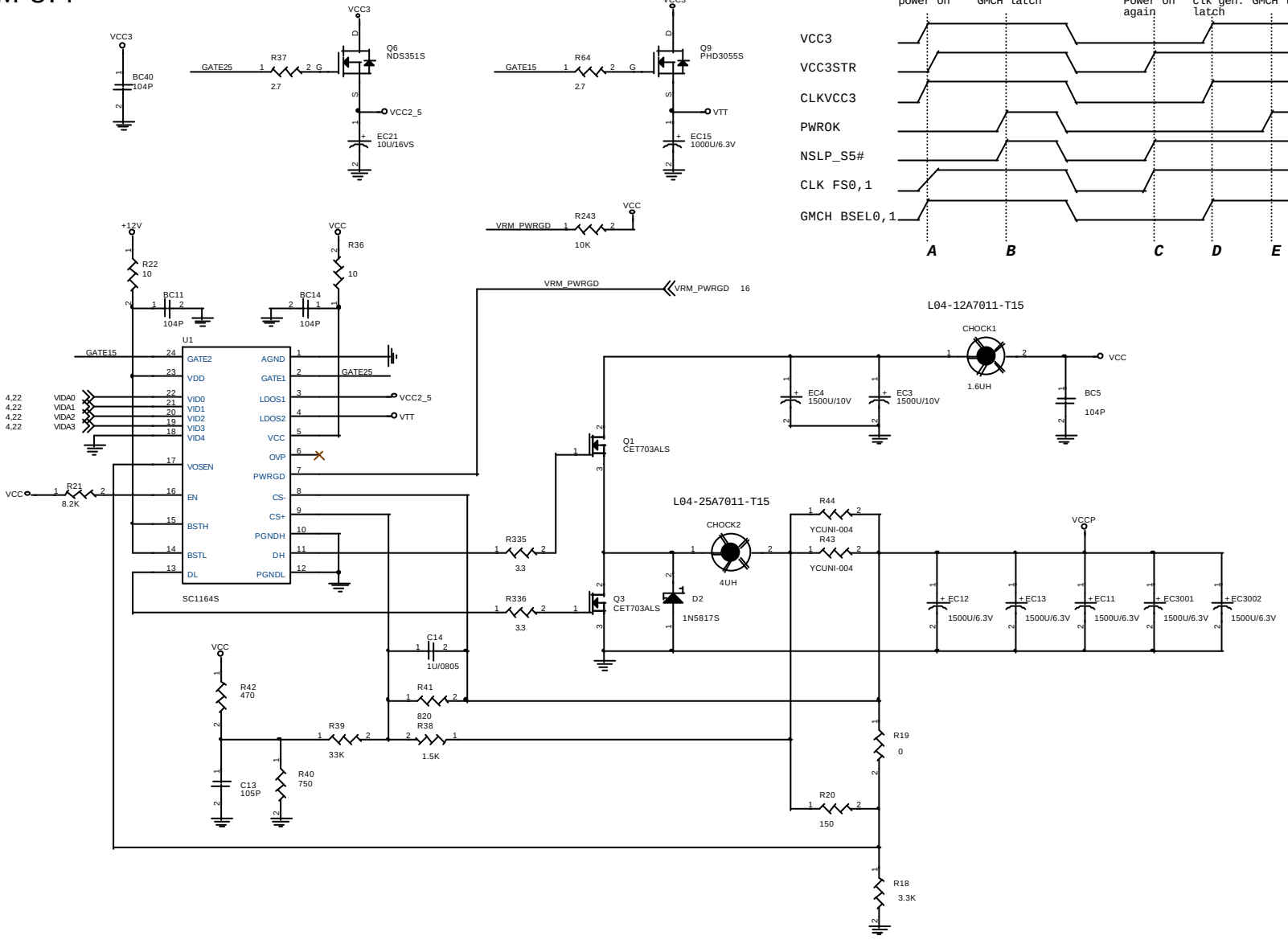

Micro-Star	Title: MS6315	Rev: 0C
Document Number: VRM 8.4 (SC1164) / VCCP , VCC2_5 , VTT		
Last Revision Date: Friday, November 24,2000	Sheet 30 of 34	

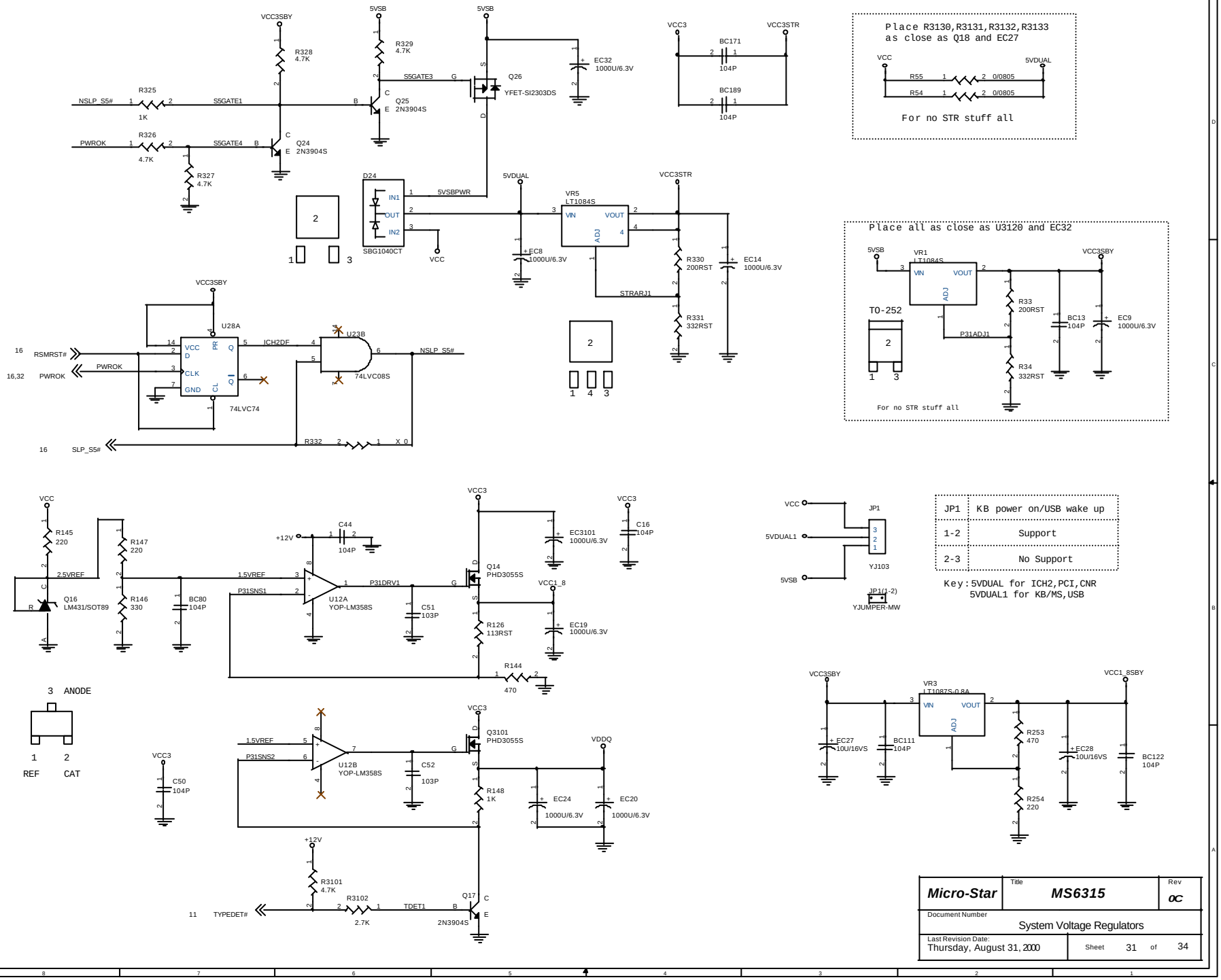
VCC3SBY
5VSB
R328 4.7K
R329 4.7K
R325 1K
R326 4.7K
R327 4.7K
NSLP_S5#
PWROK
S5GATE1
S5GATE3
S5GATE4
Q25 E 2N3904S
Q24 E 2N3904S
Q26 YFET-SI2303DS
EC32 1000U/6.3V
VCC3
VCC3STR
BC171 104P
BC189 104P
Place R3130,R3131,R3132,R3133 as close as Q18 and EC27
VCC
5VDUAL
R55 0/0805
R54 0/0805
For no STR stuff all
D24
SBG1040CT
IN1
IN2
OUT
5VSBPWR
5VDUAL
VR5 LT1084S
VIN
VOUT
ADJ
EC8 1000U/6.3V
R330 200RST
R331 332RST
EC14 1000U/6.3V
STRARJ1
VCC3STR
U28A
U23B
74LVC74
74LVC08S
RSMRST#
PWROK
ICH2DF
NSLP_S5#
SLP_S5#
R332
Place all as close as U3120 and EC32
VR1 LT1084S
TO-252
P31ADJ1
R33 200RST
R34 332RST
BC13 104P
EC9 1000U/6.3V
For no STR stuff all
VCC
R145 220
R147 220
R146 330
Q16 LM431/SOT89
2.5VREF
BC80 104P
C44 104P
+12V
1.5VREF
P31SNS1
U12A YOP-LM358S
C51 103P
P31DRV1
Q14 PHD3055S
EC3101 1000U/6.3V
C16 104P
VCC1_8
R126 113RST
EC19 1000U/6.3V
R144 470
3 ANODE
1 REF
2 CAT
C50 104P
P31SNS2
U12B YOP-LM358S
C52 103P
Q3101 PHD3055S
VDDQ
R148 1K
EC24 1000U/6.3V
EC20 1000U/6.3V
R3101 4.7K
R3102 2.7K
TYPEDET#
TDET1
Q17 2N3904S
5VDUAL1
JP1
YJ103
JP1(1-2)
YJUMPER-MW
JP1 | KB power on/USB wake up
1-2 | Support
2-3 | No Support
Key:5VDUAL for ICH2,PCI,CNR
5VDUAL1 for KB/MS,USB
VR3 LT1087S-0.8A
EC27 10U/16VS
BC111 104P
R253 470
R254 220
EC28 10U/16VS
BC122 104P
Micro-Star
MS6315
Rev 0C
Document Number
System Voltage Regulators
Last Revision Date: Thursday, August 31, 2000
Sheet 31 of 34

Front Panel & Power Connector

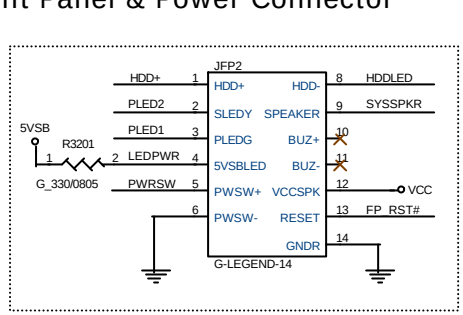

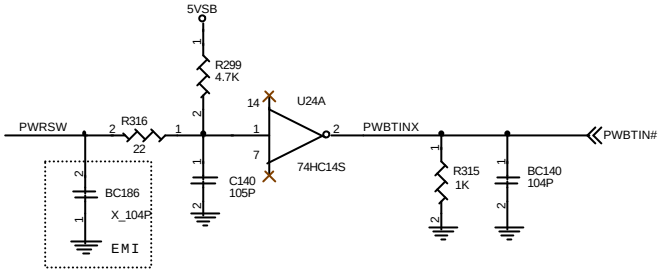

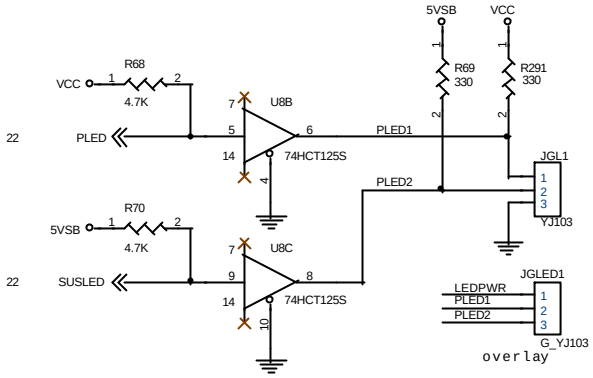

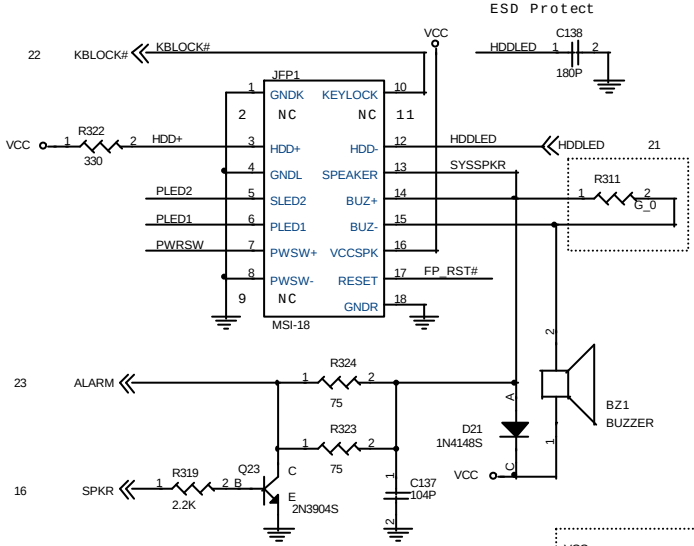

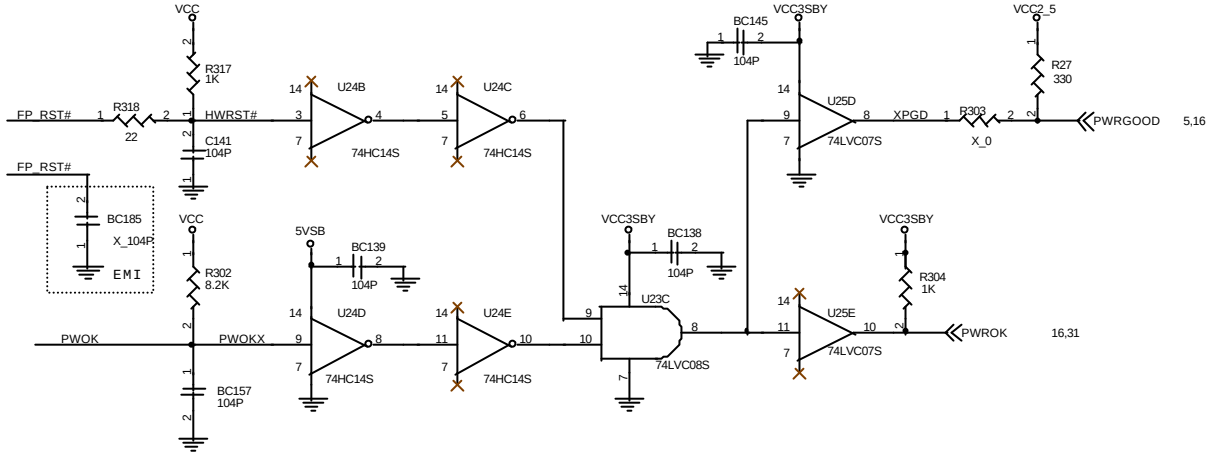

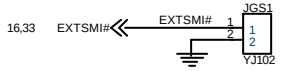

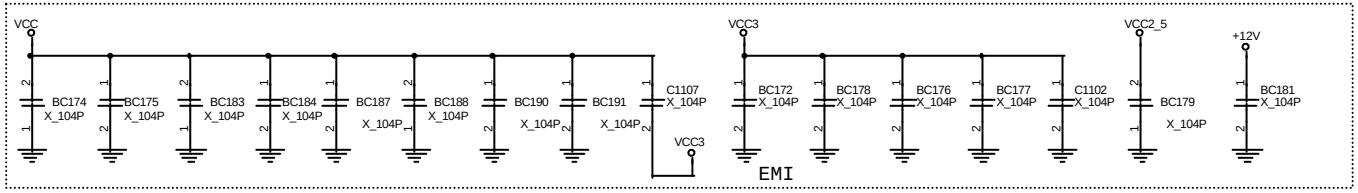

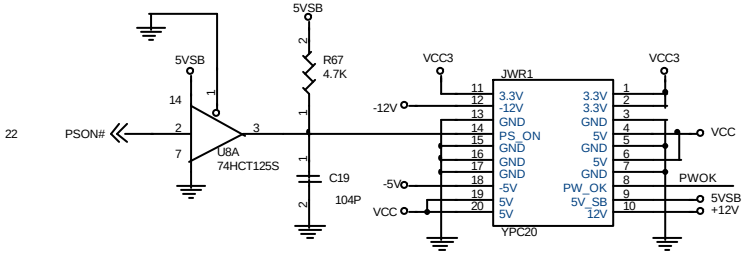

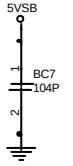

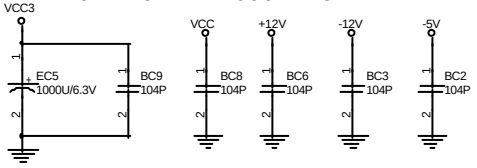

Micro-Star	Title: MS6315	Rev: 0C
Document Number: Front Panel and ATX power Connector		
Last Revision Date: Thursday, August 31, 2000	Sheet 32 of 34	

PULL-UP RESISTORS

PCI BUS

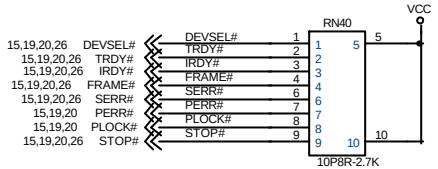

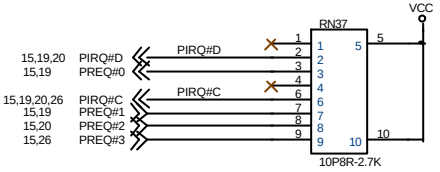

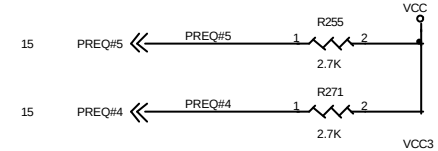

ICH

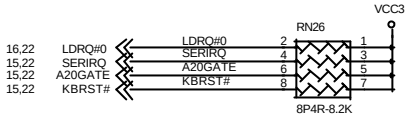

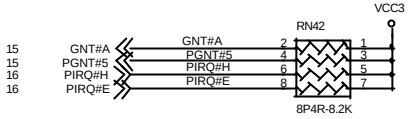

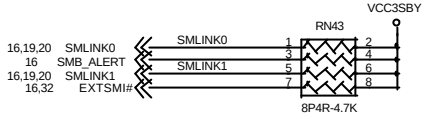

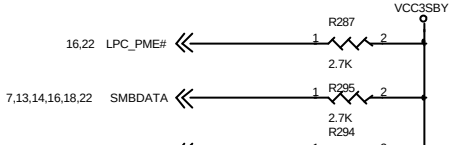

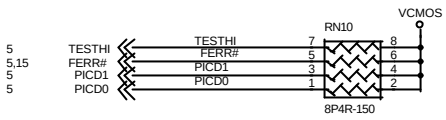

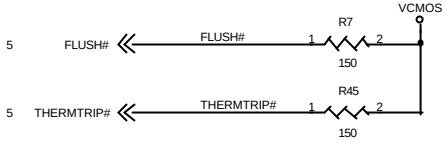

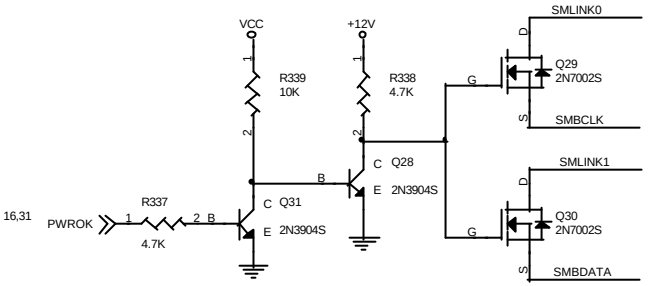

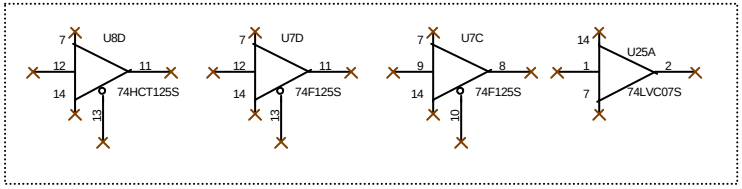

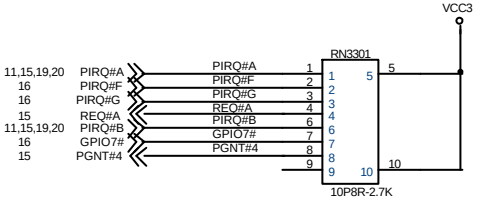

Micro-Star	Title: MS6315	Rev: 10A
Document Number: Pull-Up Resistors		
Last Revision Date: Friday, September 08, 2000	Sheet 33 of 34	

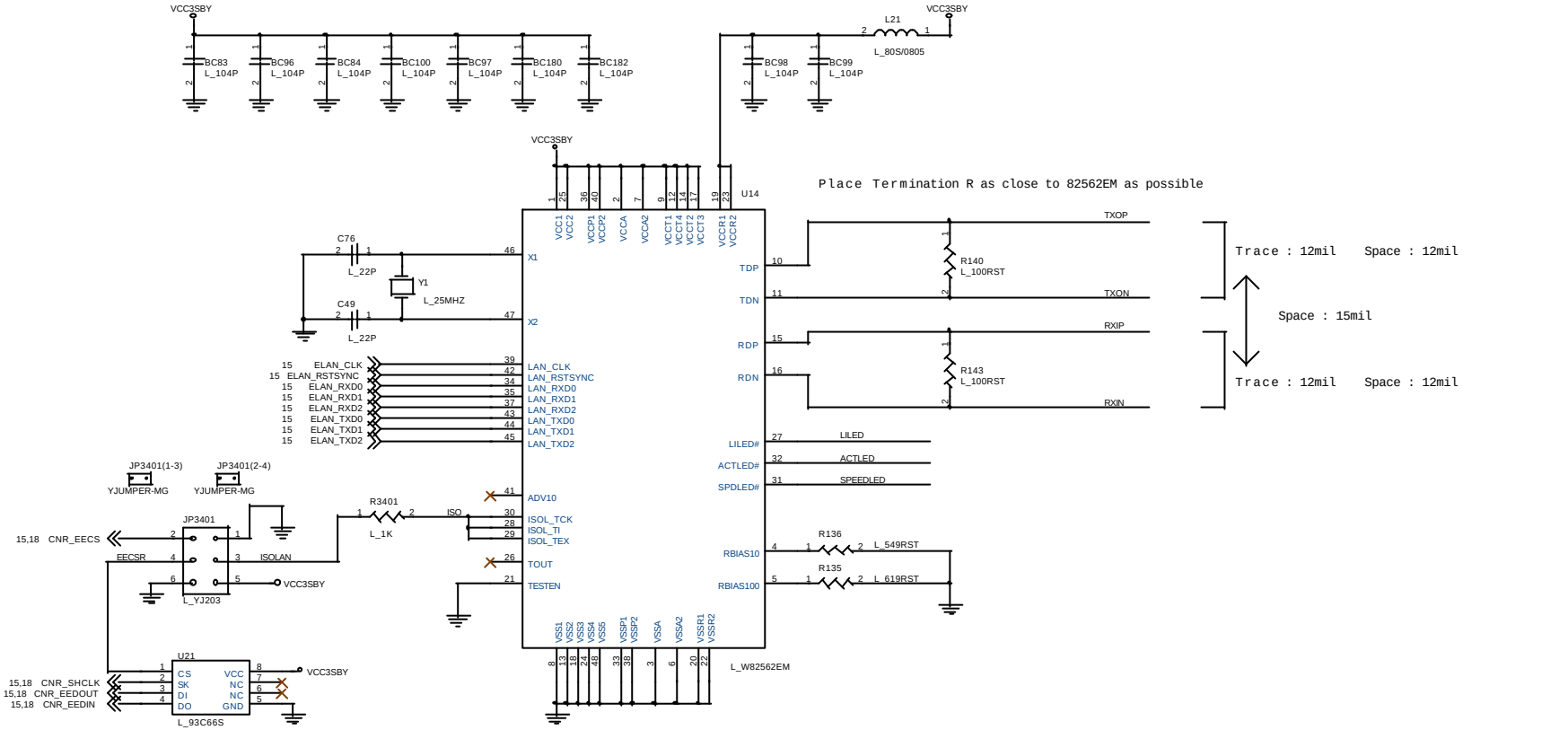

JP3401	On board LAN
1-3,2-4	Enable
3-5,4-6	Disable

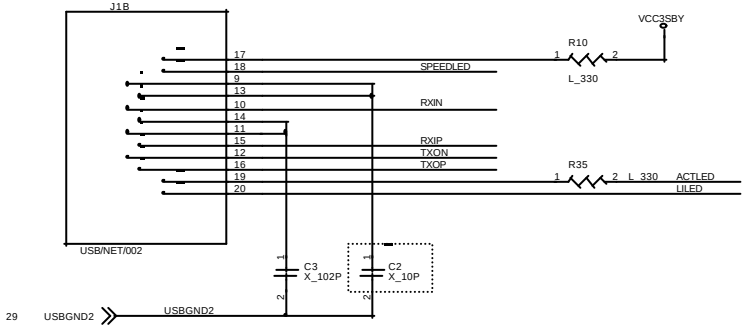

Micro-Star	Title: MS6315		Rev: 0C
Document Number: LAN Connector & I562EM (Kinnereth+)			
Last Revision Date: Monday, August 07,2000	Sheet 34 of 34		

MS-6315 Micro-ATX

Intel PPGA 370 Processor

Intel Solano2 Chipset

Winbond 83627HF-AW LPC I/O

Creative CT5880 Controller 4-Speaker

ICH2 LAN Controller + Kinnereth Plus

Model option table

Model type	Function	Part Mark
MS6315	Stantard will be del	X_????
Option A	With/ CT5880	A_????
Option L	With/ LAN on board	L_????
Option H	With/ Hardware monitor	H_????
Option S	With/ STR	S_????
Option G	For Legend only	G_????

Stantard+W/LAN ,W/ HW Monitor , W/STR

Title	Page
Cover Sheet	1
Block Diagram	2
GPIO SPEC	3
370PGA Socket	4,5
GTL Termination	6
Clock Synthesizer	7
GMCH	8,9,10
AGP / AIMM Display Cache	11
Graphics Connectors	12
System Memory	13,14
ICH	15,16
FWH	17
CNR Riser	18
PCI Connectors	19,20
ATA66 Connectors	21
LPC I/O	22
Hardware monitor	23
Parallel / Serial Port	24
Keyboard/Mouse Connectors	25
PCI Audio Controllor	26
AC'97 Codec	27
Audio/Game Port	28
USB HUB & USB Connectors	29
VRM 8.4	30
Voltage Regulators	31
Front Panel	32
Pull-up Resistors	33
LAN	34
History	

Block Diagram

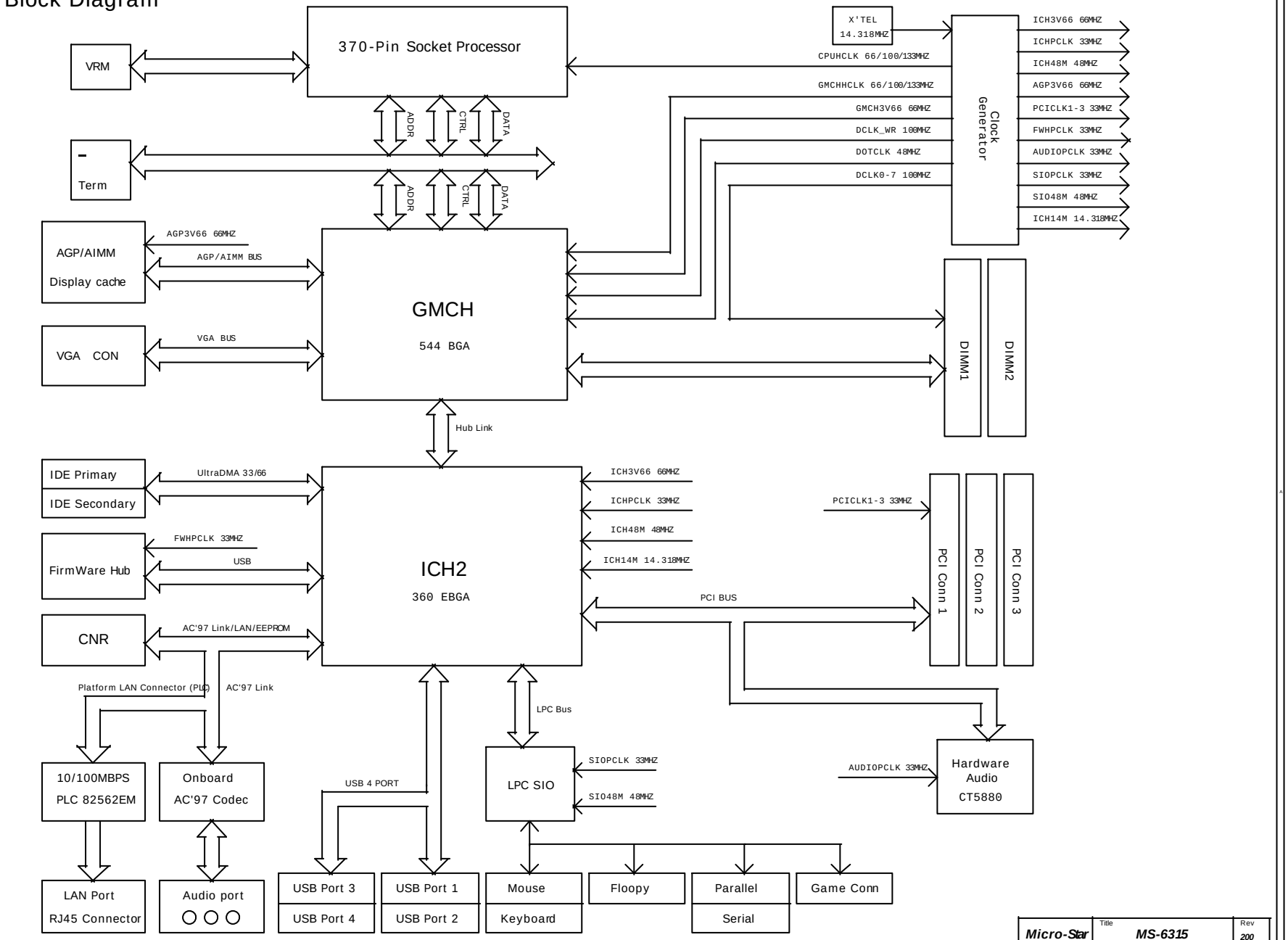

Micro-Star	Title: MS-6315	Rev: 200
Document Number: Block Diagram		
Last Revision Date: Wednesday, August 09, 2000	Sheet 2 of 34	

General Purpose I/O Spec.

ICH

GPIO Pin	Type	Function
GPIO 0	I	Pull up (REQ#A)
GPIO 1	I	PREQ#5
GPIO 2~4	I	NC
GPIO 5	I	NC
GPIO 6	I	NC
GPIO 7	I	NC
GPIO 8	I	LAN Wake Up
GPIO 9	I	Not Implemented
GPIO 10	I	Not Implemented
GPIO 11	I	SMB_ALERT
GPIO 12	I	External SMI
GPIO 13	I	LPC PME
GPIO 14~15	I	Not Implemented
GPIO 16	O	Pull up(GNT#A)
GPIO 17	O	PGNT#5
GPIO 18~20	O	NC
GPIO 21	O	FAN Ctrl
GPIO 22	O	Pullup
GPIO 23	OD	BIOS update lock(H)/unlock(L)
GPIO 24	O	NC
GPIO 25	O	NC
GPIO 26	O	Not Implemented
GPIO 27	I/O	NC
GPIO 28	I/O	NC
GPIO 29~31	I/O	Not Implemented

FWH

GPIO Pin	Type	Function
GPI 0	I	ATA IDE 1 Detect
GPI 1	I	ATA IDE 2 Detect
GPI 2	I	GPI2=L GPI3=H Flash from FDD
GPI 3	I	GPI2=H GPI3=L Boot Auto clear CMOS

ICH2 SMLINK0,1 Connect to PCI2 for PCI card AOL

PCI Config.

DEVICE	ICH INT Pin	IDSEL
PCI Slot 1	INTA# INTB# INTC# INTD#	AD16
PCI Slot 2	INTB# INTC# INTD# INTA#	AD17
PCI Slot 3	INTC# INTD# INTA# INTB#	AD18
CT5880	INTC#	AD26

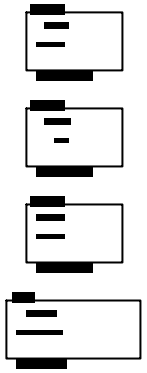

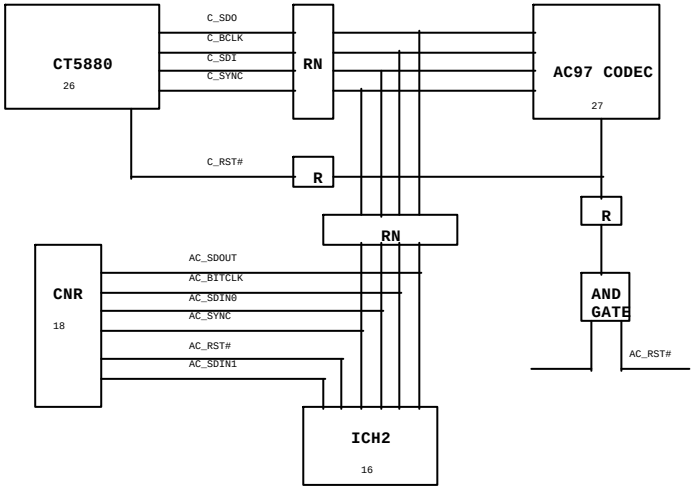

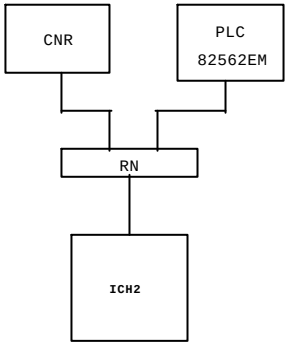

Micro-Star	MS-6315	200
BIOS GPIO SPEC.		
Wednesday, August 09, 2000	3	34

370PGA Socket Part 1

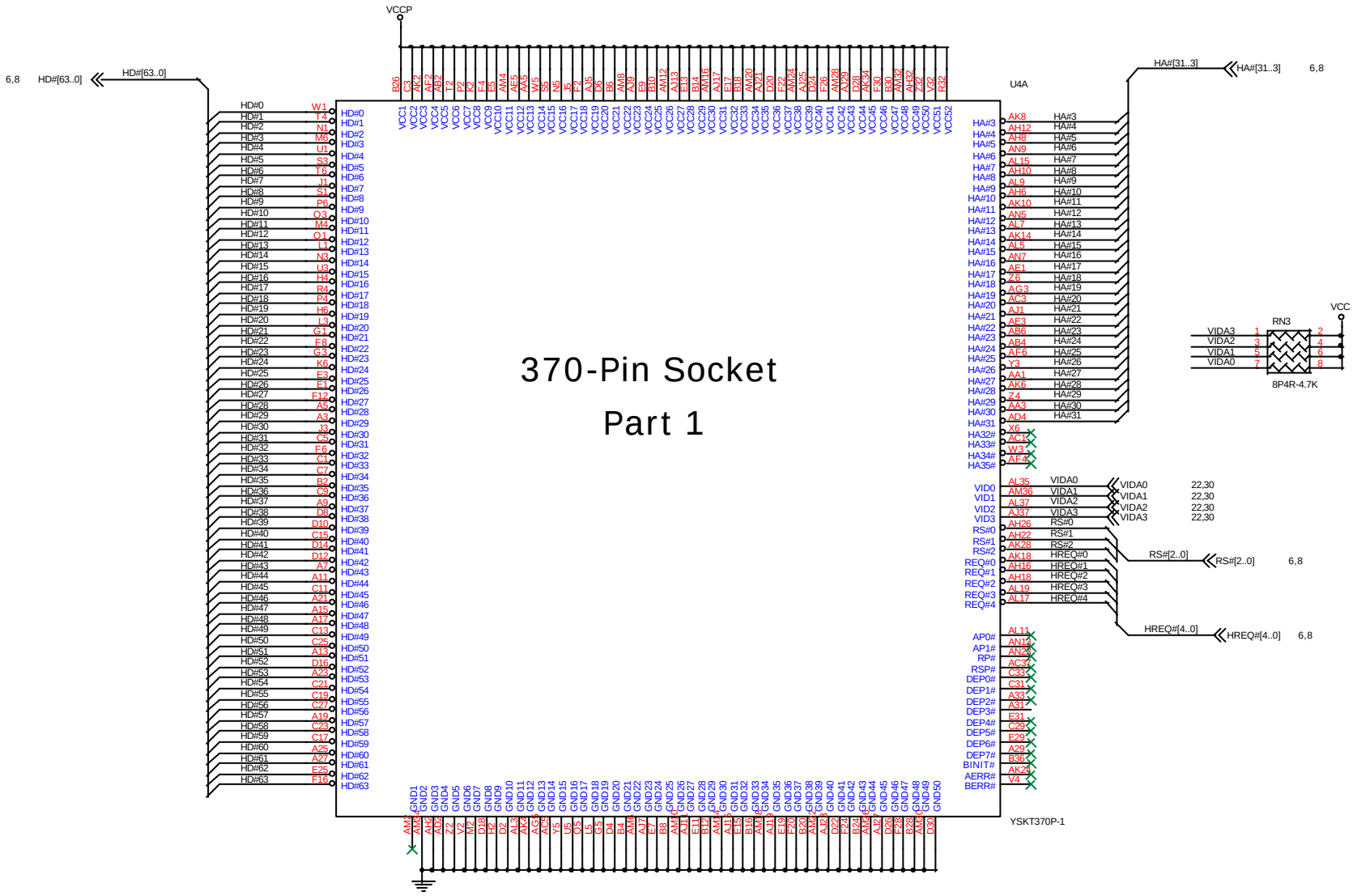

Micro-Star	Title: MS-6315		Rev: 200
Document Number: SOCKET 370 PGA-1			
Last Revision Date: Wednesday, August 09, 2000		Sheet 4 of 34	

370PGA Socket Part 2

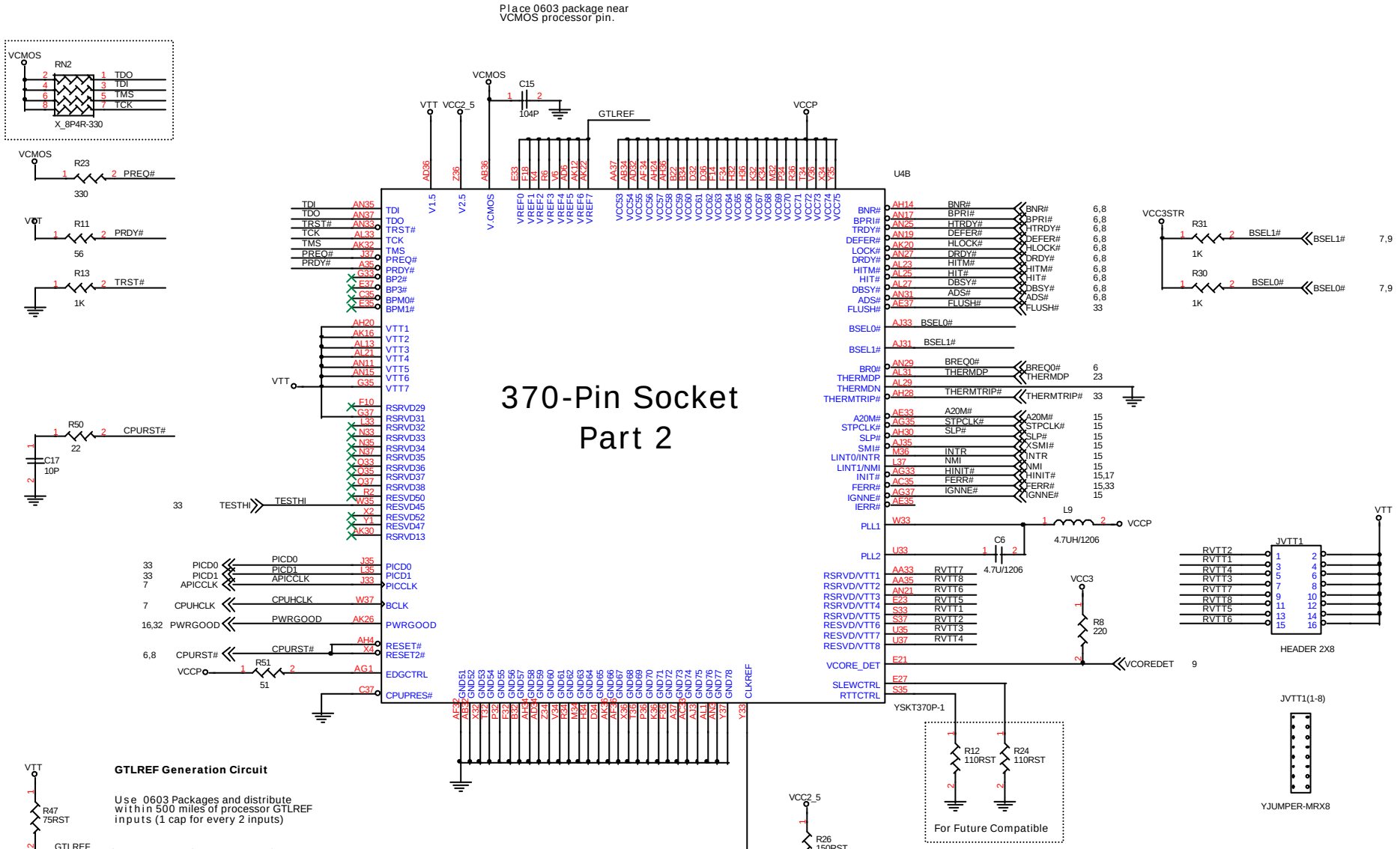

Micro-Star	Title: MS-6315		Rev: 200
	Document Number: SOCKET 370 PGA-2		
	Last Revision Date: Wednesday, August 09, 2000	Sheet 5 of 34	

GTL Termination

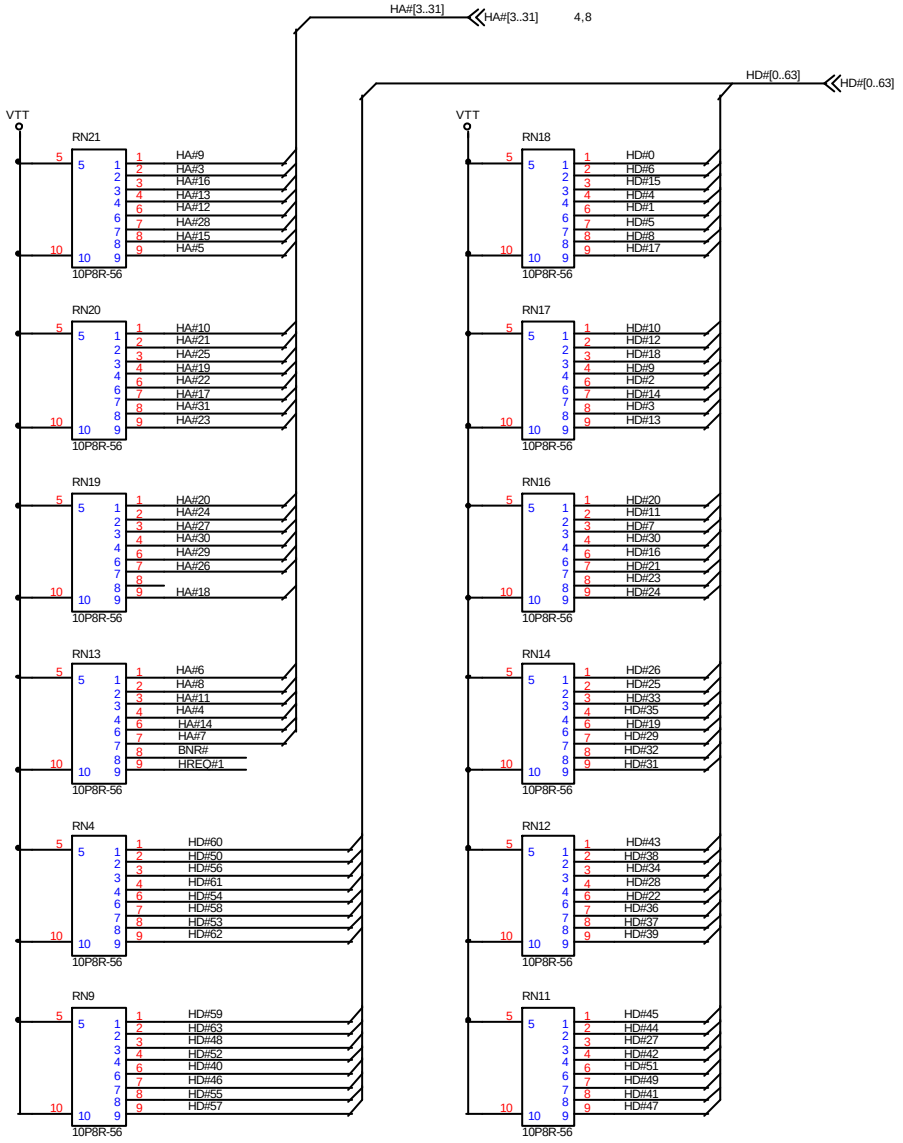

GTL VTT Bypass Capacitor

Every two R-packs add one 0.1U Cap.

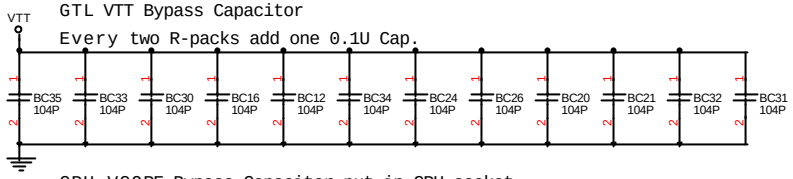

CPU VCORE Bypass Capacitor put in CPU socket

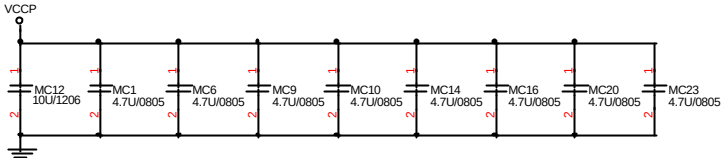

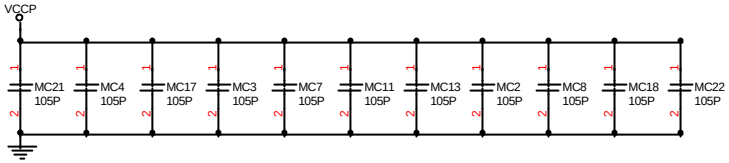

For VCCP

11 PCS 105P Cap. Placement

9 PCS 4.7U/0805 Cap. Placement

1 PCS 10U/1206 Cap. Placement

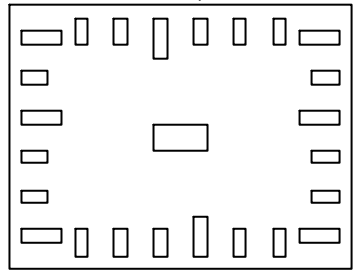

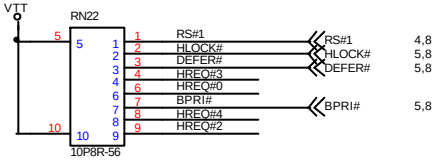

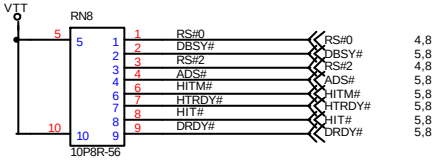

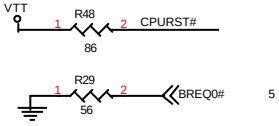

Micro-Star	Title: MS-6315	Rev: 200
Document Number: GTL Termination		
Last Revision Date: Wednesday, August 09, 2000	Sheet 6 of 34	

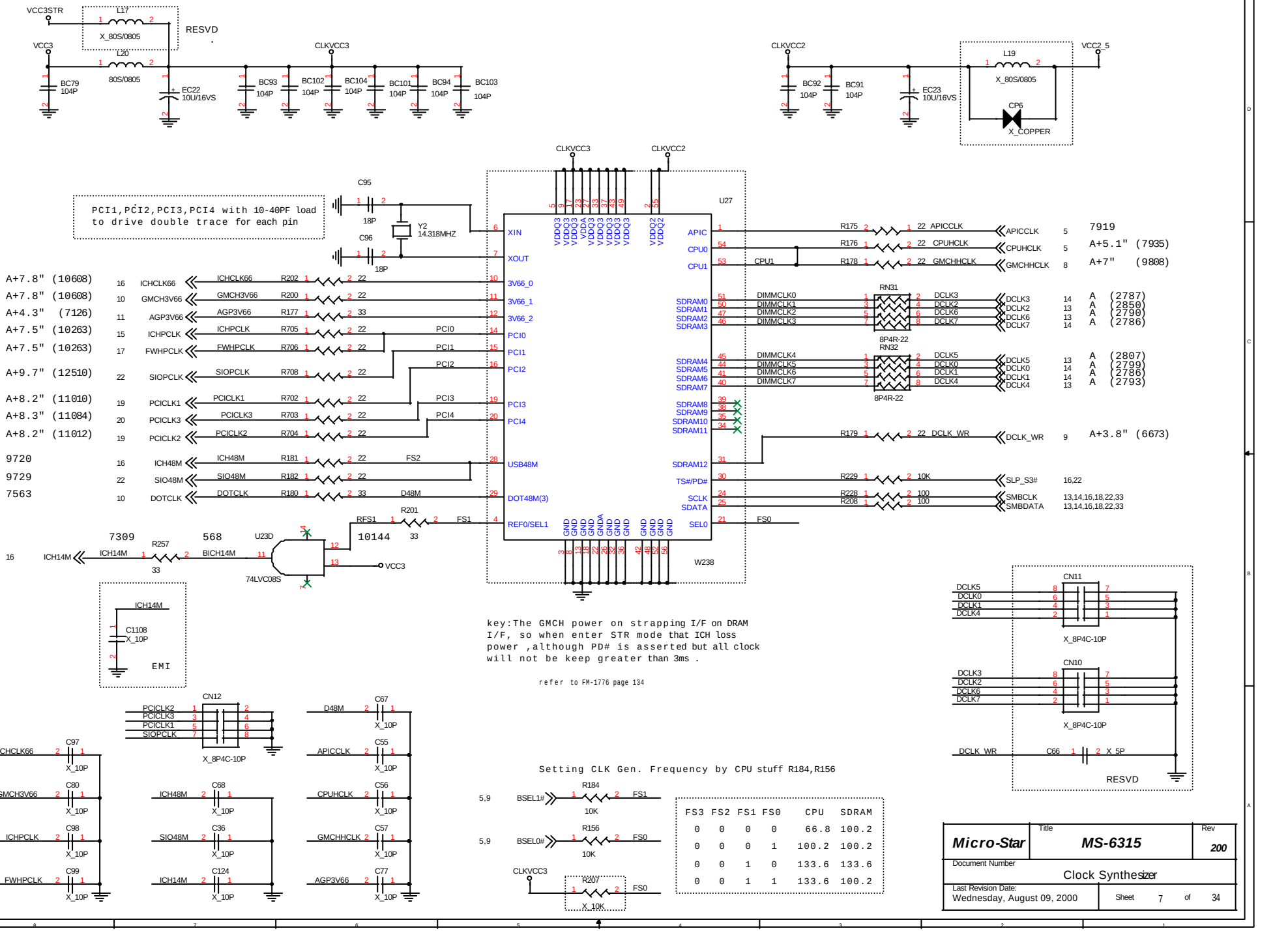
VCC3STR
L17
X_80S/0805
RESVD
VCC3
L20
80S/0805
BC79 104P
EC22 10U/16VS
CLKVCC3
BC93 104P
BC102 104P
BC104 104P
BC101 104P
BC94 104P
BC103 104P
CLKVCC2
BC92 104P
BC91 104P
EC23 10U/16VS
L19
X_80S/0805
VCC2_5
CP6
X_COPPER
PCI1,PCI2,PCI3,PCI4 with 10-40PF load to drive double trace for each pin
C95
18P
Y2 14.318MHZ
C96
18P
U27
XIN
XOUT
3V66_0
3V66_1
3V66_2
PCI0
PCI1
PCI2
PCI3
PCI4
USB48M
DOT48M(3)
REF0/SEL1
APIC
CPU0
CPU1
SDRAM0
SDRAM1
SDRAM2
SDRAM3
SDRAM4
SDRAM5
SDRAM6
SDRAM7
SDRAM8
SDRAM9
SDRAM10
SDRAM11
SDRAM12
TS#/PD#
SCLK
SDATA
SEL0
W238
A+7.8" (10608)
A+7.8" (10608)
A+4.3" (7126)
A+7.5" (10263)
A+7.5" (10263)
A+9.7" (12510)
A+8.2" (11010)
A+8.3" (11084)
A+8.2" (11012)
9720
9729
7563
ICHCLK66
GMCH3V66
AGP3V66
ICHPCLK
FWHPCLK
SIOPCLK
PCICLK1
PCICLK3
PCICLK2
ICH48M
SIO48M
DOTCLK
R202 22
R200 22
R177 33
R705 22
R706 22
R708 22
R702 22
R703 22
R704 22
R181 22
R182 22
R180 33
FS2
D48M
FS1
R201 33
RFS1
10144
7309
568
U23D
74LVC08S
R257 33
ICH14M
BICH14M
VCC3
R175 22 APICCLK
R176 22 CPUHCLK
R178 22 GMCHHCLK
CPU1
RN31
8P4R-22
DIMMCLK0
DIMMCLK1
DIMMCLK2
DIMMCLK3
DCLK3
DCLK2
DCLK6
DCLK7
RN32
DIMMCLK4
DIMMCLK5
DIMMCLK6
DIMMCLK7
DCLK5
DCLK0
DCLK1
DCLK4
R179 22 DCLK_WR
R229 10K
R228 100
R208 100
SLP_S3#
SMBCLK
SMBDATA
APICCLK 5 7919
CPUHCLK 5 A+5.1" (7935)
GMCHHCLK 8 A+7" (9808)
DCLK3 14 A (2787)
DCLK2 13 A (2850)
DCLK6 13 A (2790)
DCLK7 14 A (2786)
DCLK5 13 A (2807)
DCLK0 14 A (2799)
DCLK1 14 A (2786)
DCLK4 13 A (2793)
DCLK_WR 9 A+3.8" (6673)
SLP_S3# 16,22
SMBCLK 13,14,16,18,22,33
SMBDATA 13,14,16,18,22,33
key:The GMCH power on strapping I/F on DRAM I/F, so when enter STR mode that ICH loss power ,although PD# is asserted but all clock will not be keep greater than 3ms .
refer to FM-1776 page 134
ICH14M
C1108 X_10P
EMI
CN12
X_8P4C-10P
C97 X_10P
C80 X_10P
C98 X_10P
C99 X_10P
C67 X_10P
C55 X_10P
C56 X_10P
C57 X_10P
C77 X_10P
C68 X_10P
C36 X_10P
C124 X_10P
CN11
CN10
C66 X_5P
RESVD
Setting CLK Gen. Frequency by CPU stuff R184,R156
BSEL1# R184 10K FS1
BSEL0# R156 10K FS0
CLKVCC3 R207 X_10K FS0
FS3 FS2 FS1 FS0 CPU SDRAM
0 0 0 0 66.8 100.2
0 0 0 1 100.2 100.2
0 0 1 0 133.6 133.6
0 0 1 1 133.6 100.2
Micro-Star
Title
MS-6315
Rev
200
Document Number
Clock Synthesizer
Last Revision Date:
Wednesday, August 09, 2000
Sheet 7 of 34

82815, PART 1 : HOST INTERFACE

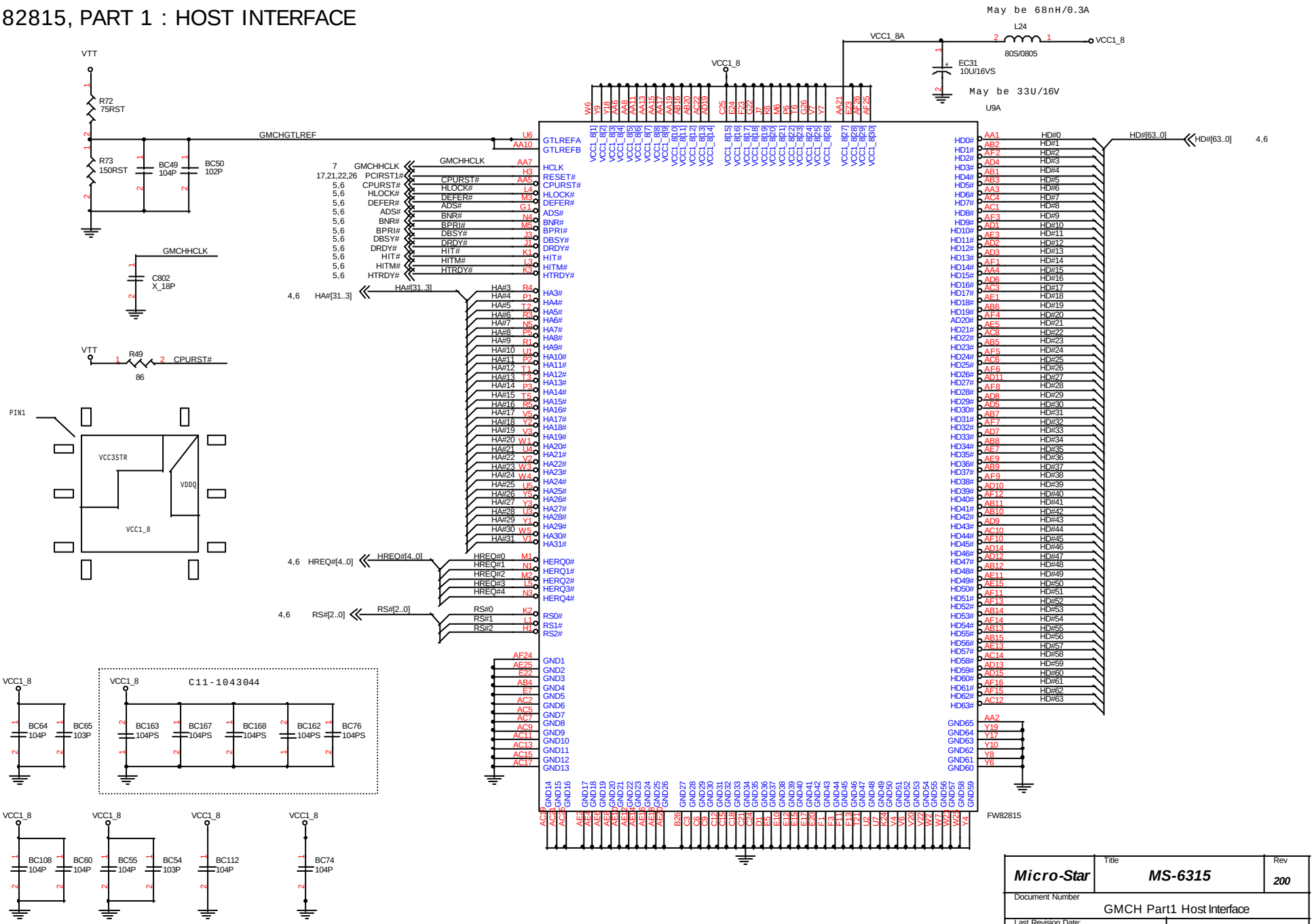

Micro-Star	Title: MS-6315		Rev: 200
Document Number: GMCH Part1 Host Interface			
Last Revision Date: Wednesday, August 09, 2000		Sheet 8 of 34	

GMCH, PART 2 : SYSTEM MEMORY

C11-1043044

VCC3STR

BC56 104P | BC46 104P | BC48 104P | BC45 103P | BC61 104P | BC62 104P | BC159 104P | BC160 104P | BC161 104P | BC164 104PS

RN24 — 8P4R-10

SM_MAA6 2 — 1 MAA6
SM_MAA7 4 — 3 MAA7
SM_MAA4 6 — 5 MAA4
SM_MAA5 8 — 7 MAA5

13,14 SM_MAA[12..0]

SM_MAA0
SM_MAA1
SM_MAA2
SM_MAA3
SM_MAA4
SM_MAA5
SM_MAA6
SM_MAA7
SM_MAA8
SM_MAA9
SM_MAA10
SM_MAA11
SM_MAA12

RN25 — 8P4R-10

14 SM_MAB6 — 2 — 1 MAB6
14 SM_MAB7 — 4 — 3 MAB7
14 SM_MAB4 — 6 — 5 MAB4
14 SM_MAB5 — 8 — 7 MAB5

13,14 SM_BS[1..0]
SM_BS0
SM_BS1

13 SM_CSA#0
13 SM_CSA#1
14 SM_CSA#2
14 SM_CSA#3

13 SM_CSB#0
13 SM_CSB#1
14 SM_CSB#2
14 SM_CSB#3

13,14 SM_RAS#
13,14 SM_CAS#
13,14 SM_WE#

13 SM_CKE0
13 SM_CKE1
14 SM_CKE2
14 SM_CKE3

7 DCLK_WR — SCLK

C901 20P

SM_DQM0
SM_DQM1
SM_DQM2
SM_DQM3
SM_DQM4
SM_DQM5
SM_DQM6
SM_DQM7

13,14 SM_DQM[7..0]

R74 40.2RST — VCC3STR

Place Resister as Close as Possible to GMCH

VCC3STR

U9B

SM_MD[63..0] — SM_MD[63..0] 13,14

SMAA0 SMAA1 SMAA2 SMAA3 SMAA4 SMAA5 SMAA6 SMAA7 SMAA8 SMAA9 SMAA10 SMAA11 SMAA12
SMAB4# SMAB5# SMAB6# SMAB7#
SMAC4# SMAC5# SMAC6# SMAC7#
SBS0 SBS1
SCSA0# SCSA1# SCSA2# SCSA3# SCSA4# SCSA5#
SCSB0# SCSB1# SCSB2# SCSB3# SCSB4# SCSB5#
SRAS# SCAS# SWE#
SCKE0 SCKE1 SCKE2 SCKE3 SCKE4 SCKE5
SCLK RESVD
SDQM0 SDQM1 SDQM2 SDQM3 SDQM4 SDQM5 SDQM6 SDQM7
SRCOMP

SMD0 SMD1 SMD2 SMD3 SMD4 SMD5 SMD6 SMD7 SMD8 SMD9 SMD10 SMD11 SMD12 SMD13 SMD14 SMD15 SMD16 SMD17 SMD18 SMD19 SMD20 SMD21 SMD22 SMD23 SMD24 SMD25 SMD26 SMD27 SMD28 SMD29 SMD30 SMD31 SMD32 SMD33 SMD34 SMD35 SMD36 SMD37 SMD38 SMD39 SMD40 SMD41 SMD42 SMD43 SMD44 SMD45 SMD46 SMD47 SMD48 SMD49 SMD50 SMD51 SMD52 SMD53 SMD54 SMD55 SMD56 SMD57 SMD58 SMD59 SMD60 SMD61 SMD62 SMD63

SM_WE# R52 10K — BSEL0# 5,7
SM_CAS# R53 10K — BSEL1# 5,7

Host Freq.	BSEL1	BSEL0
66MHZ	0	0
100MHZ	0	1
	1	0
133MHZ	1	1

SM_MAA9 R94 10K — VCOREDET 5

R107 X_10K — SBA7 10,11

Local Memory Freq. Select

High:133MHZ Low:100MHZ

SM_MAA11 R901 X_10K

IOQ Depth Select

High: 4 Depth Low: 1 Depth

SM_MAA12 R902 X_10K

High: Socket Low: SCS242

FW82815

Micro-Star	Title: MS-6315	Rev: 200
Document Number: GMCH Part2 memory interface		
Last Revision Date: Wednesday, August 09, 2000	Sheet 9 of 34	

GMCH PART 3 : AGP & VIDEO Interface & HUB link

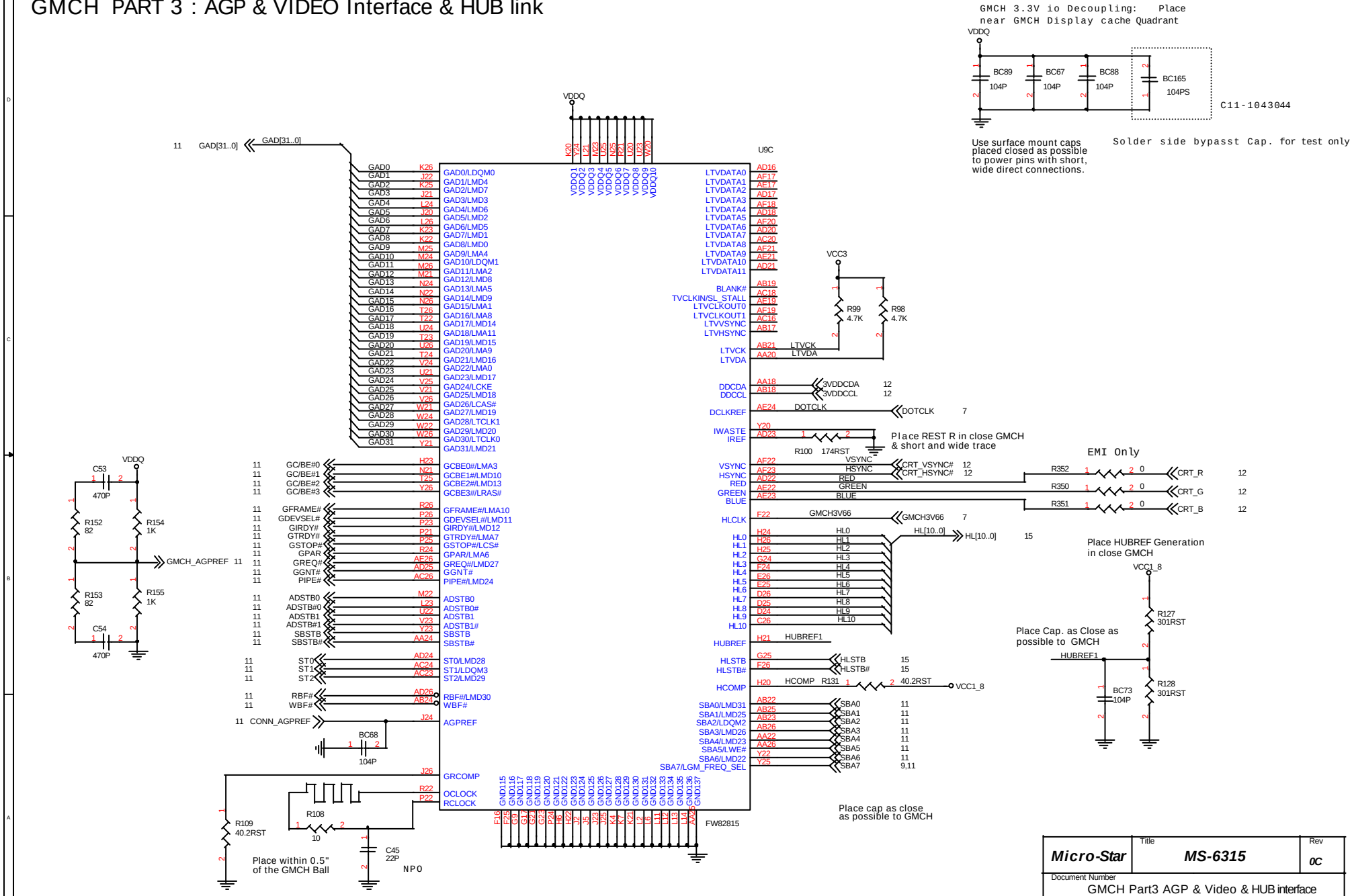

Micro-Star	Title: MS-6315		Rev: 0C
Document Number: GMCH Part3 AGP & Video & HUB interface			
Last Revision Date: Wednesday, August 09, 2000		Sheet 10 of 34	

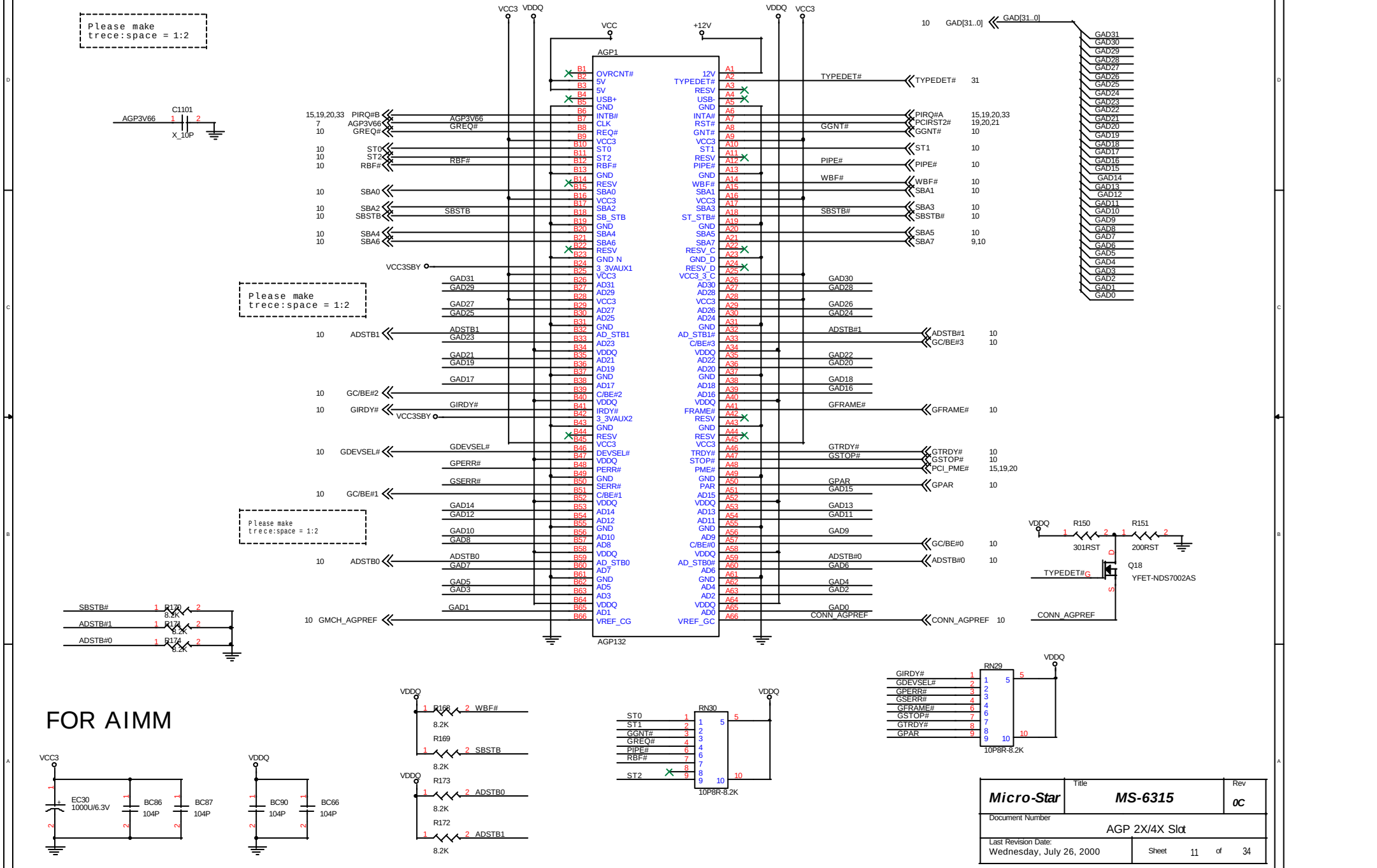

Micro-Star	Title: MS-6315	Rev: 0C
Document Number: AGP 2X/4X Slot		
Last Revision Date: Wednesday, July 26, 2000	Sheet 11 of 34	

Video Connector

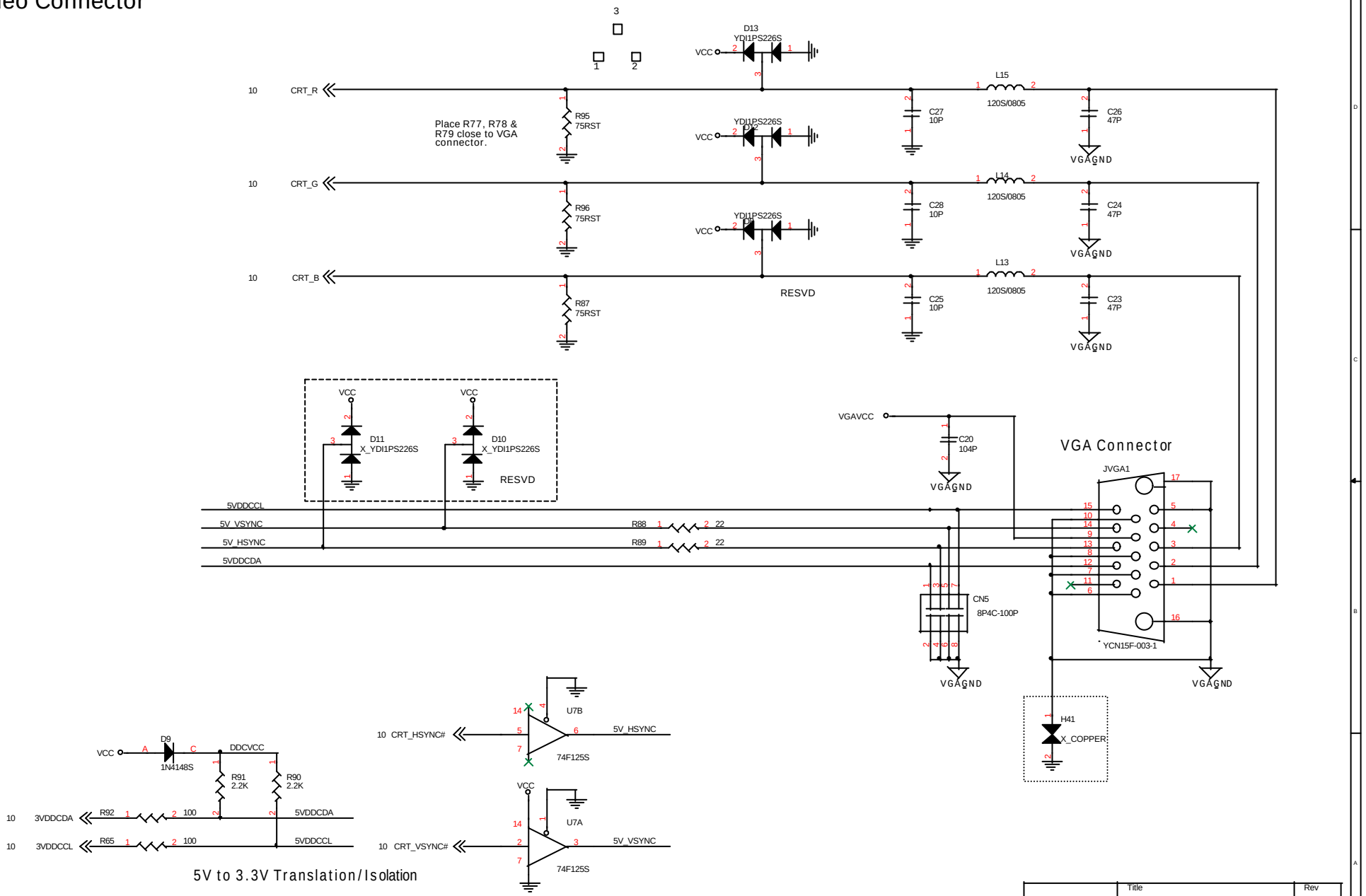

Micro-Star	Title: MS-6315	Rev: 0C
Document Number: Video Connector		
Last Revision Date: Thursday, June 22, 2000	Sheet 12 of 34	

DIMM1

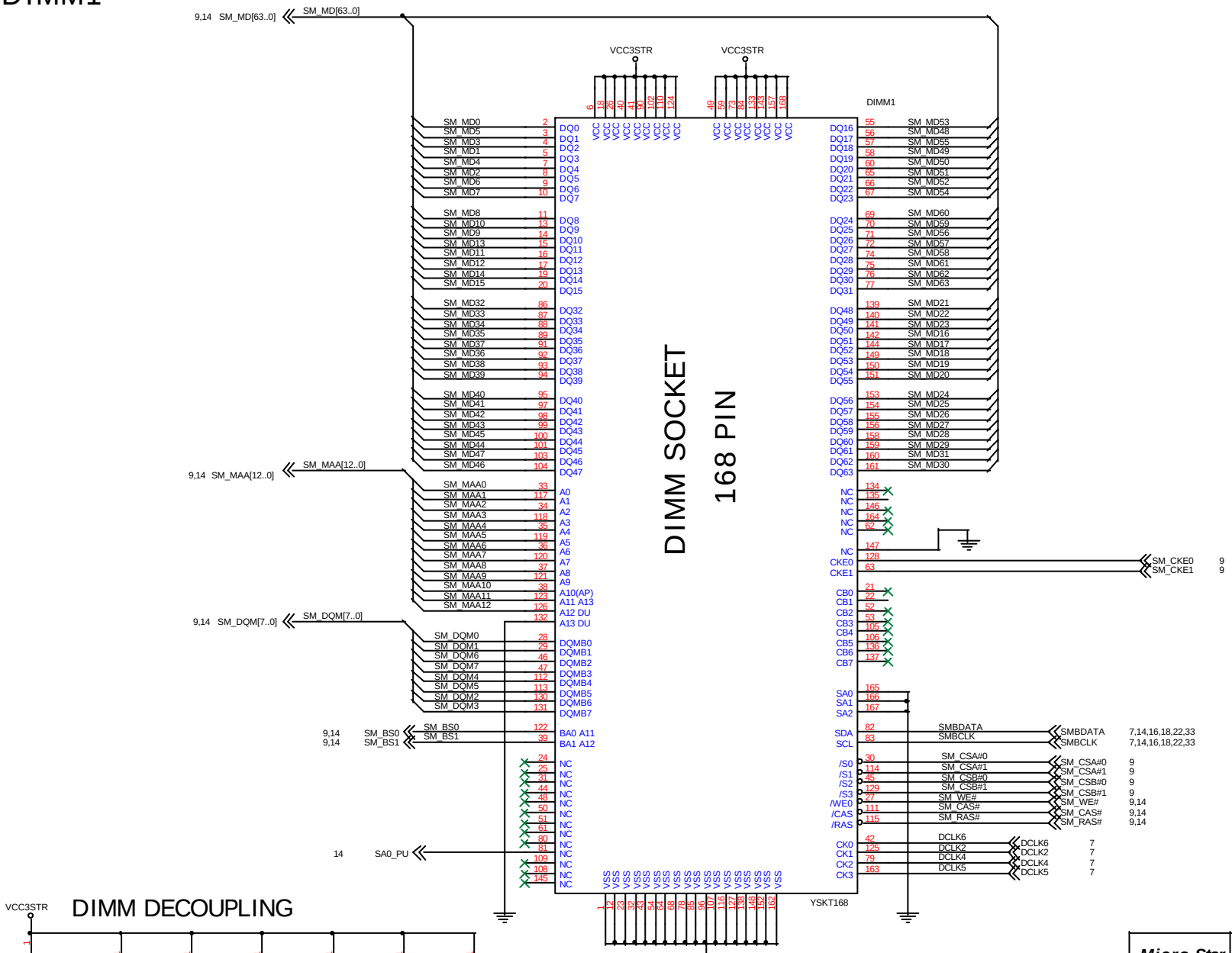

DIMM DECOUPLING

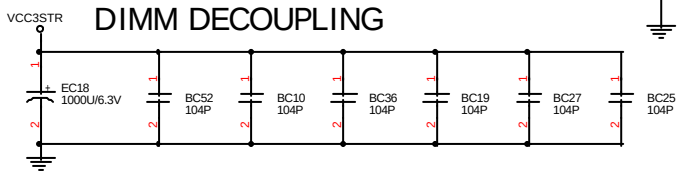

Micro-Star	Title: MS-6315		Rev: 0C
Document Number: System Memory: DIMM1			
Last Revision Date: Wednesday, June 21, 2000		Sheet 13 of 34	

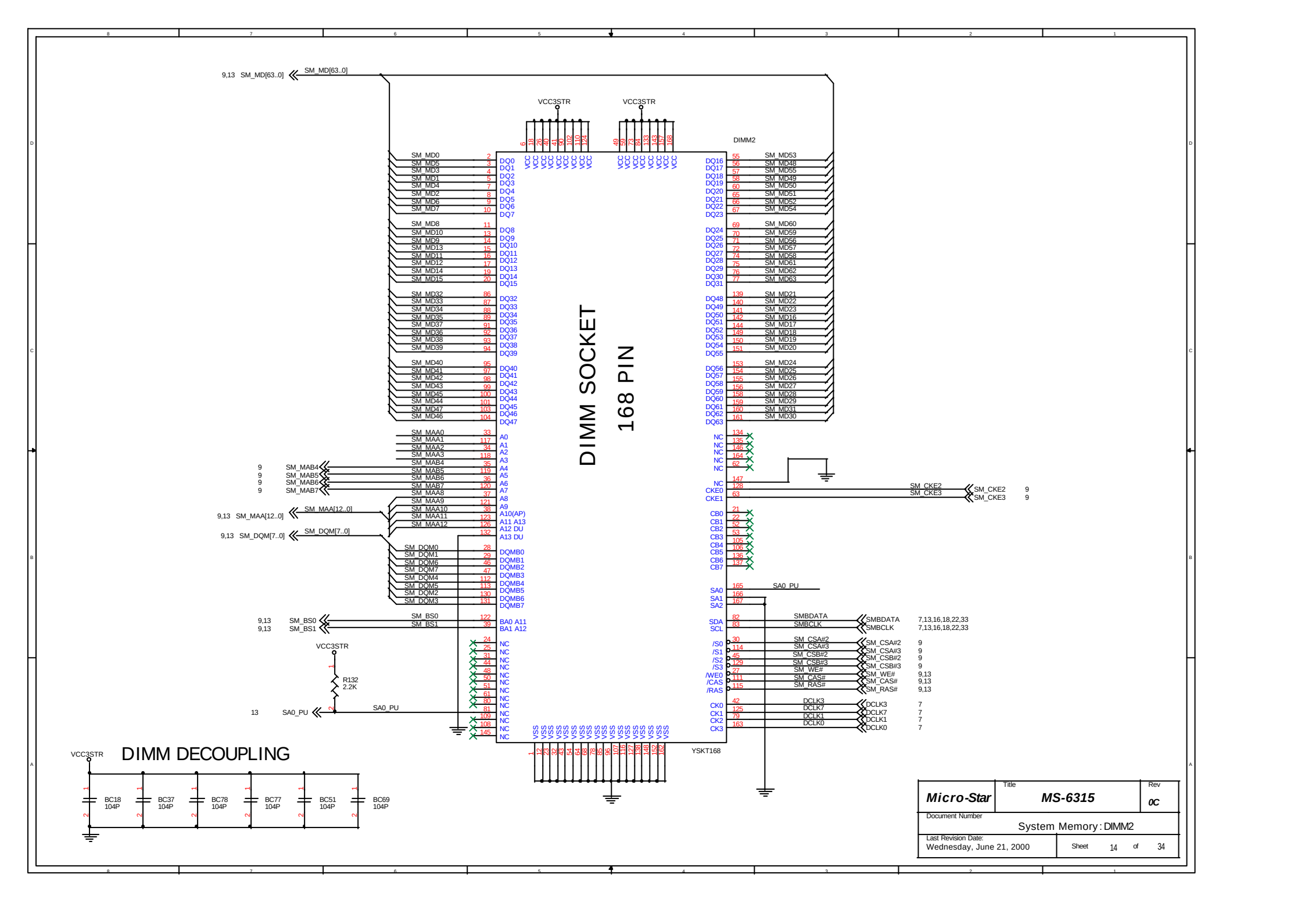
DIMM SOCKET
168 PIN
DIMM2
YSKT168
VCC3STR
SM_MD[63..0]
SM_MAA[12..0]
SM_DQM[7..0]
SM_MAB4
SM_MAB5
SM_MAB6
SM_MAB7
SM_BS0
SM_BS1
SA0_PU
R132
2.2K
SM_CKE2
SM_CKE3
SMBDATA
SMBCLK
SM_CSA#2
SM_CSA#3
SM_CSB#2
SM_CSB#3
SM_WE#
SM_CAS#
SM_RAS#
DCLK3
DCLK7
DCLK1
DCLK0
DIMM DECOUPLING
BC18 104P
BC37 104P
BC78 104P
BC77 104P
BC51 104P
BC69 104P
Micro-Star
MS-6315
0C
System Memory: DIMM2
Wednesday, June 21, 2000
Sheet 14 of 34

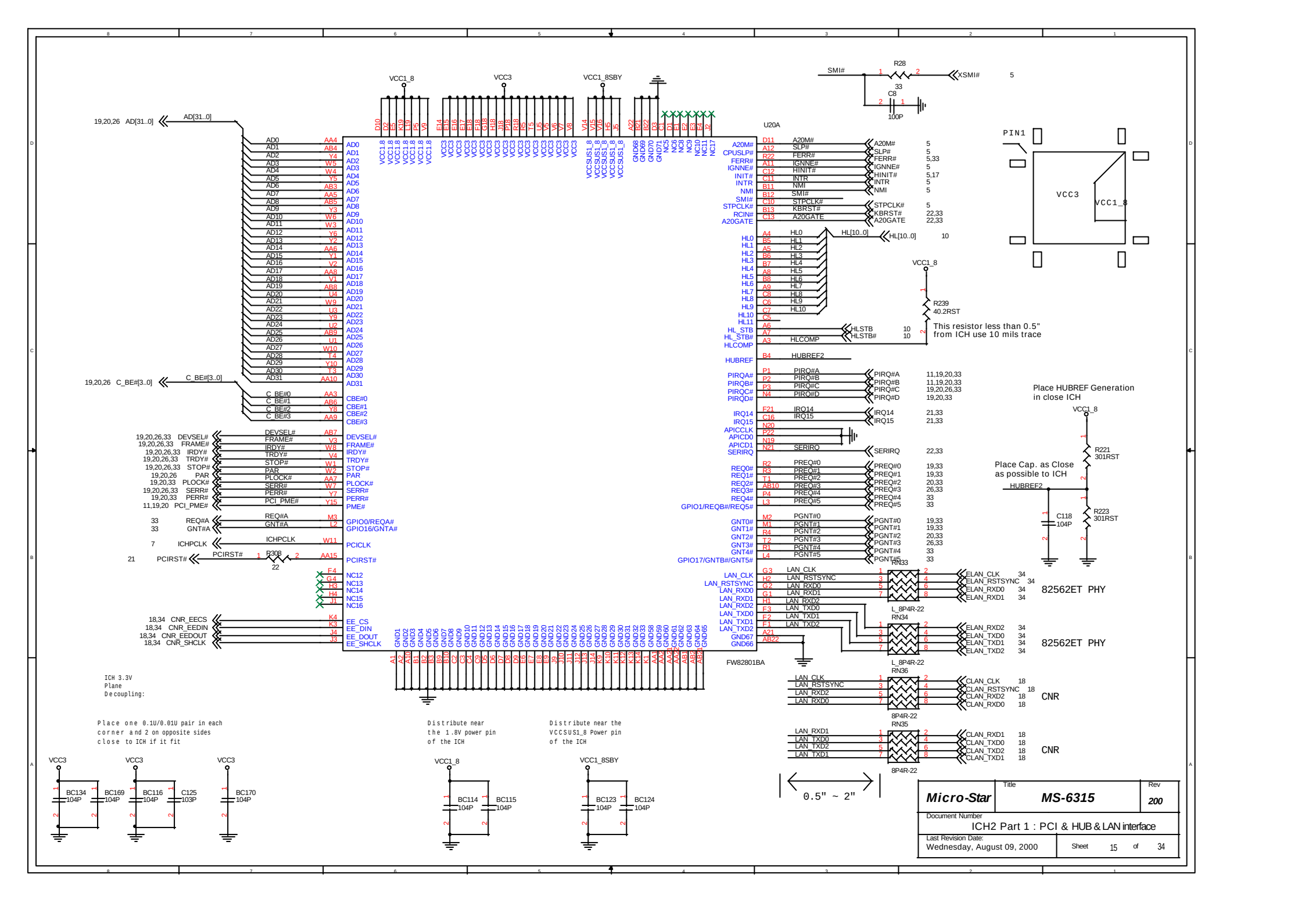
VCC1_8
VCC3
VCC1_8SBY
SMI#
R28
33
C8
100P
XSMI#
U20A
PIN1
VCC3
VCC1_8
19,20,26 AD[31..0]
AD[31..0]
19,20,26 C_BE#[3..0]
C_BE#[3..0]
HL[10..0]
R239
40.2RST
This resistor less than 0.5" from ICH use 10 mils trace
Place HUBREF Generation in close ICH
Place Cap. as Close as possible to ICH
R221
301RST
R223
301RST
C118
104P
HUBREF2
82562ET PHY
82562ET PHY
CNR
CNR
RN33
RN34
RN35
RN36
L_8P4R-22
8P4R-22
FW82801BA
ICH 3.3V Plane Decoupling:
Place one 0.1U/0.01U pair in each corner and 2 on opposite sides close to ICH if it fit
Distribute near the 1.8V power pin of the ICH
Distribute near the VCCSUS1_8 Power pin of the ICH
BC134 104P
BC169 104P
BC116 104P
C125 103P
BC170 104P
BC114 104P
BC115 104P
BC123 104P
BC124 104P
0.5" ~ 2"
Micro-Star
MS-6315
200
ICH2 Part 1 : PCI & HUB & LAN interface
Wednesday, August 09, 2000
15 of 34

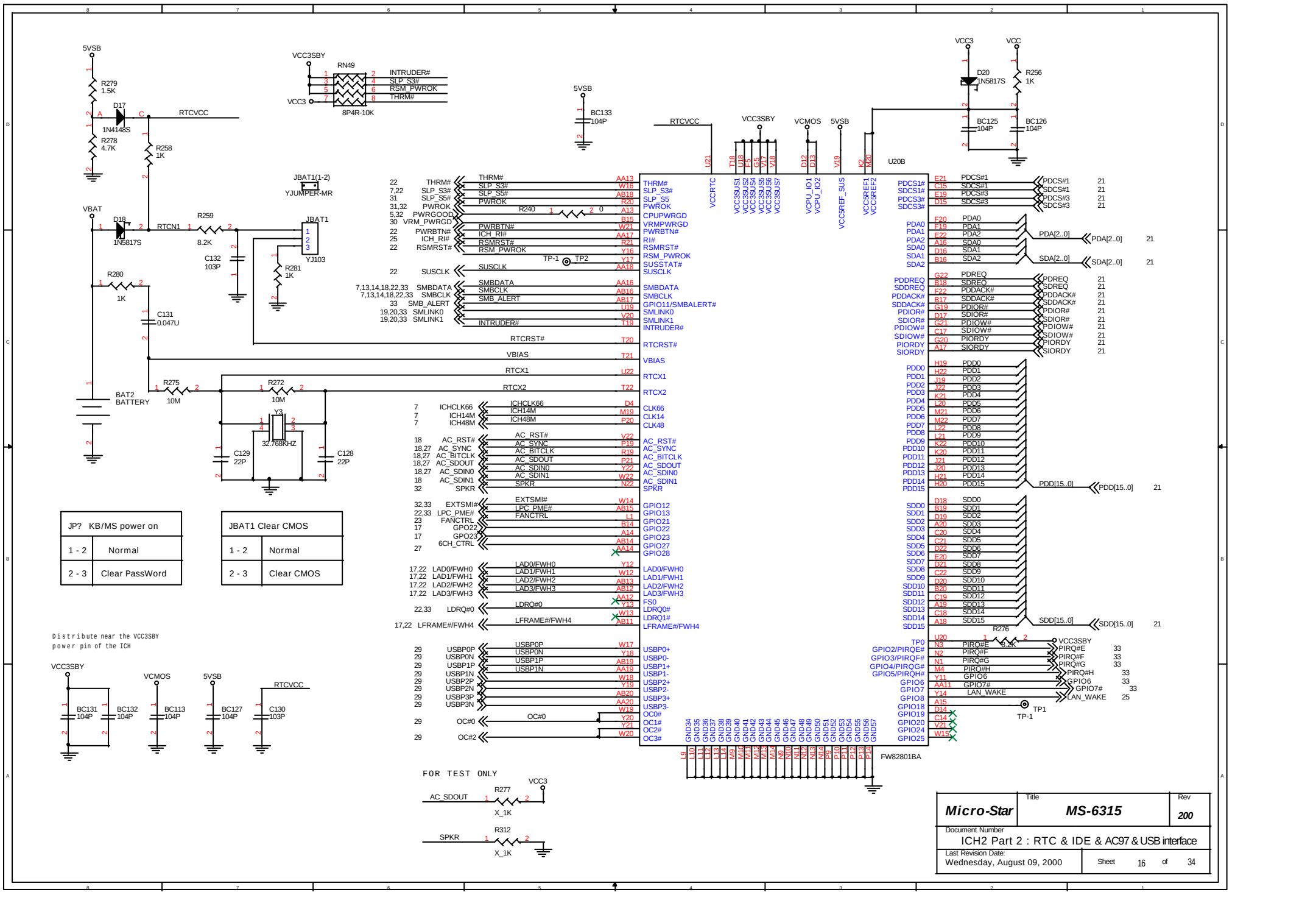

Micro-Star	Title: MS-6315
	Rev: 200
Document Number	ICH2 Part 2 : RTC & IDE & AC97 & USB interface
Last Revision Date: Wednesday, August 09, 2000	Sheet 16 of 34

Firware Hub (FWH)

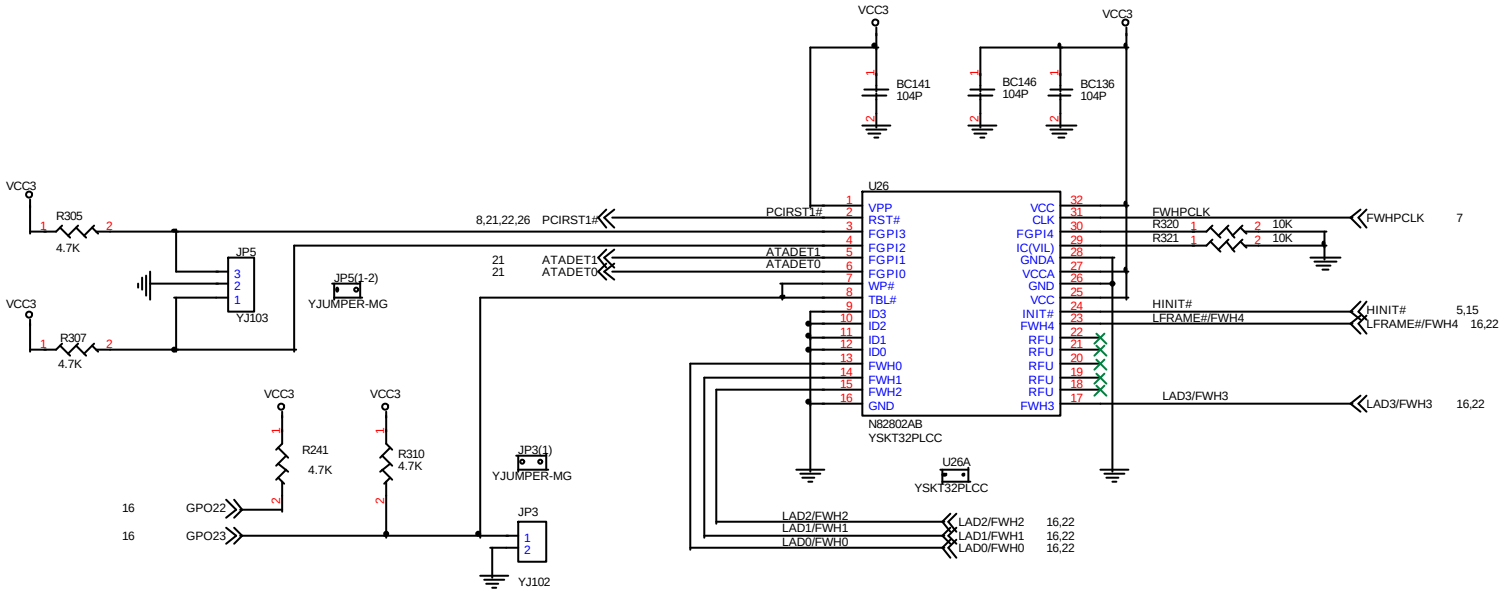

JP5 BIOS Update Configuration	
1 - 2	Normal Mode
2 - 3	Boot auto clear CMOS
OPEN	Flash from FDD

*

JP3 BIOS Update	
SHORT	Locked
OPEN	Unlocked

Micro-Star	Title: MS-6315	Rev: 200
Document Number: Firware HUB (FWH)		
Last Revision Date: Wednesday, August 09, 2000	Sheet 17 of 34	

CNR RISER

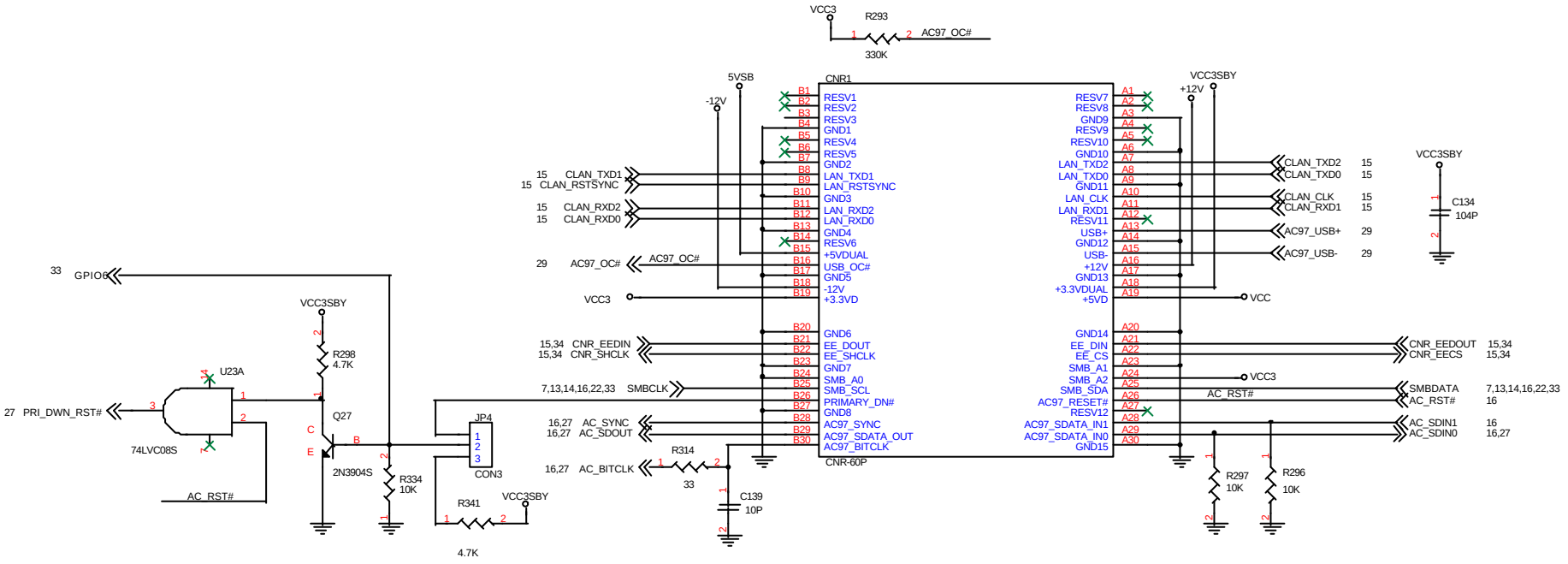

JP4	AUDIO DOWN
1 - 2	Enable onboard audio codec
2 - 3	Disable onboard audio codec

Micro-Star	Title: MS-6315	Rev: 200
Document Number: CNR Slot		
Last Revision Date: Wednesday, August 09, 2000	Sheet 18 of 34	

PCI Connectors

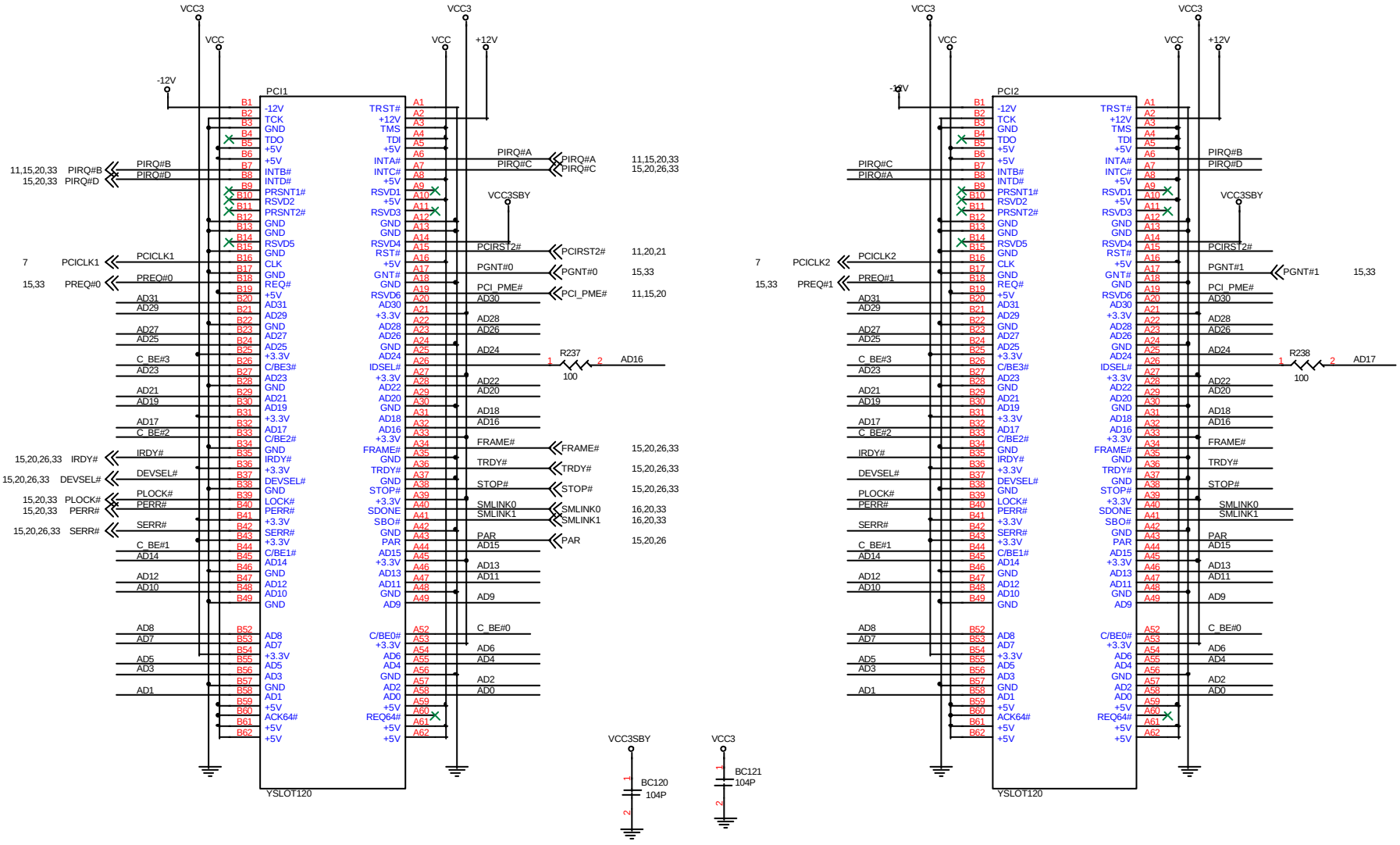

15,20,26 AD[31..0] ← AD[31..0]

15,20,26 C_BE#[3..0] ← C_BE#[3..0]

Micro-Star	Title: MS-6315	Rev: 200
Document Number: PCI Slot 1 & 2		
Last Revision Date: Wednesday, August 09, 2000	Sheet 19 of 34	

PCI Slot

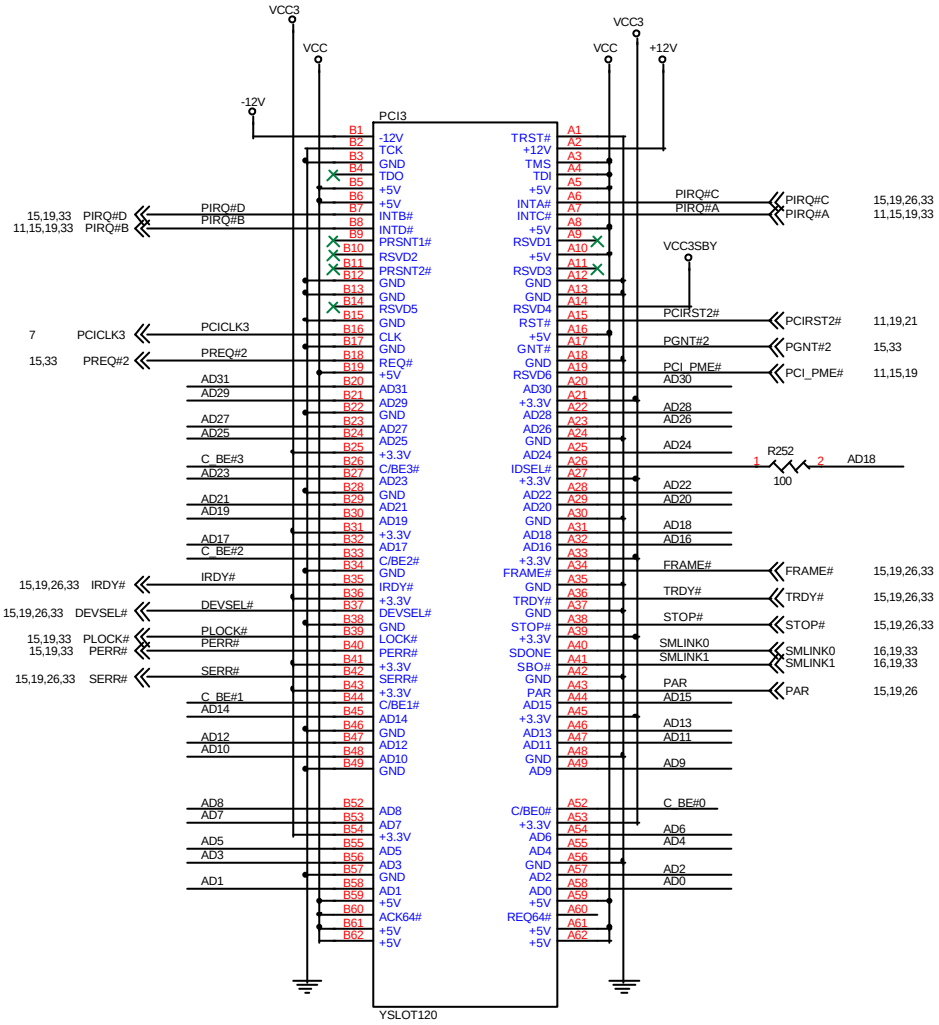

15,19,26 AD[31..0] AD[31..0]

15,19,26 C_BE#[3..0] C_BE#[3..0]

Micro-Star	Title: MS-6315	Rev: 200
Document Number: PCI Slot 3		
Last Revision Date: Wednesday, August 09, 2000	Sheet 20 of 34	

ATA66 IDE CONNECTORS

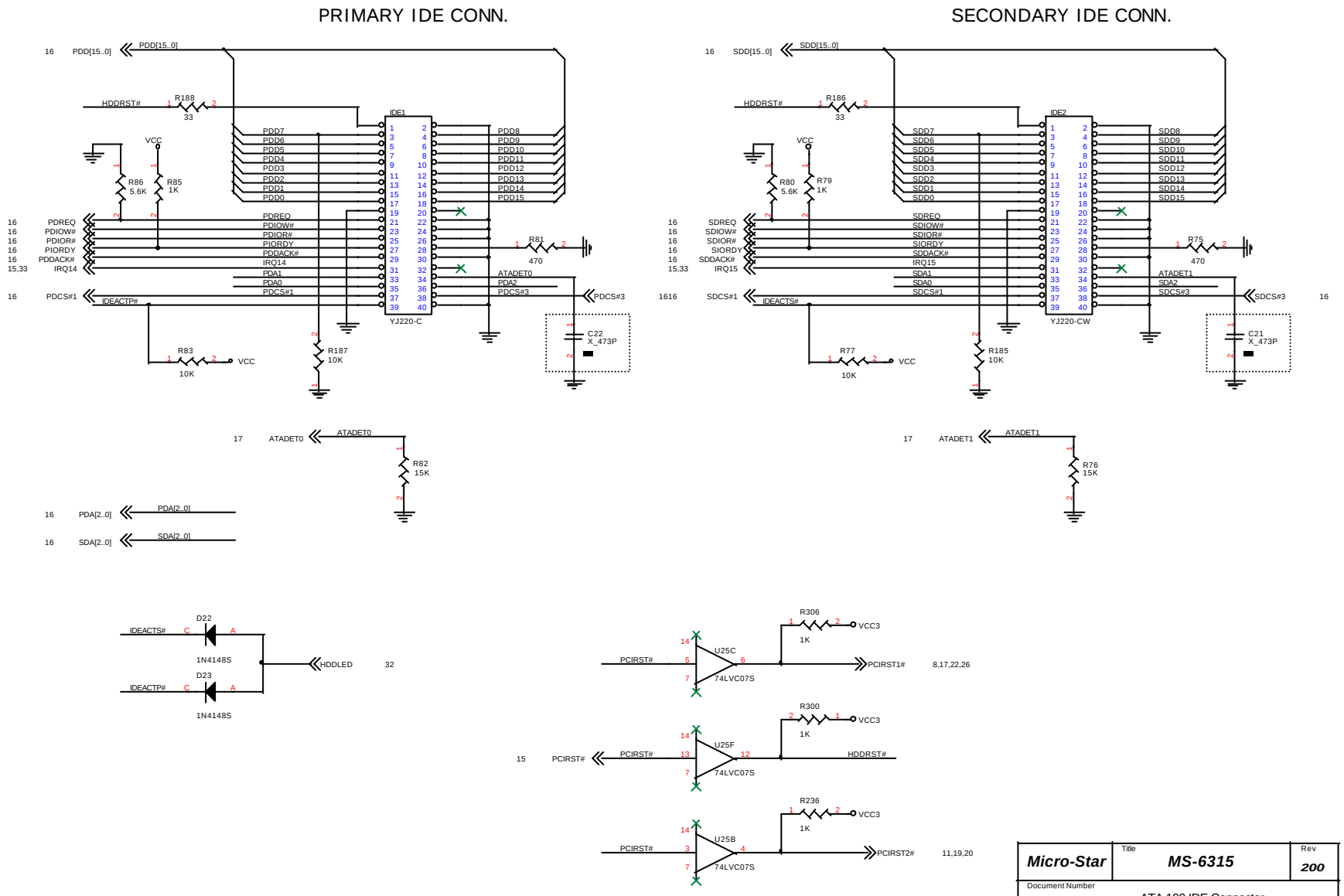

Micro-Star	Title: MS-6315		Rev: 200
Document Number: ATA 100 IDE Connector			
Last Revision Date: Wednesday, August 09,2000		Sheet 21 of 34	

Super I/O

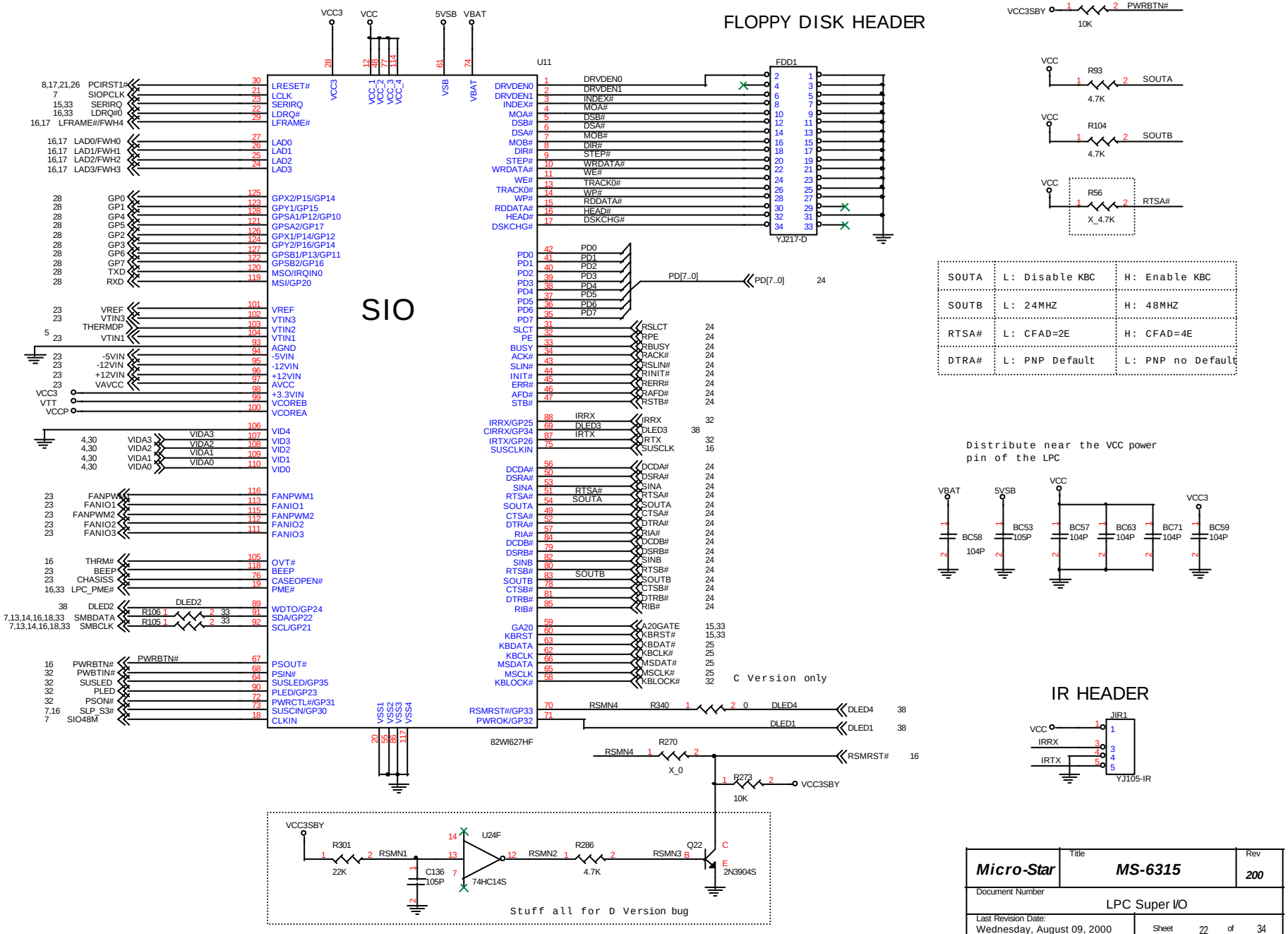
FLOPPY DISK HEADER
SIO
U11
FDD1
YJ217-D
82WI627HF
C Version only
Stuff all for D Version bug
Distribute near the VCC power pin of the LPC
IR HEADER
JIR1
YJ105-IR
SOUTA L: Disable KBC H: Enable KBC
SOUTB L: 24MHZ H: 48MHZ
RTSA# L: CFAD=2E H: CFAD=4E
DTRA# L: PNP Default L: PNP no Default
Micro-Star
MS-6315
200
LPC Super I/O
Wednesday, August 09, 2000
Sheet 22 of 34

Hardware Monitor

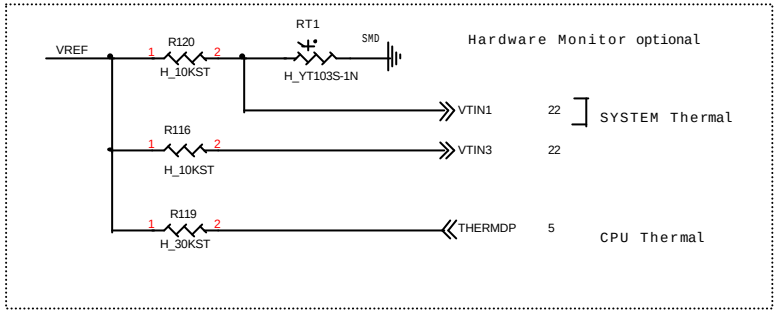

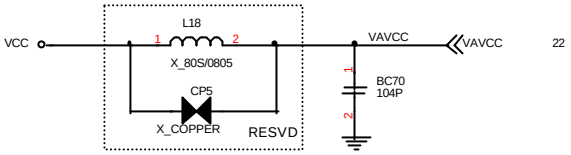

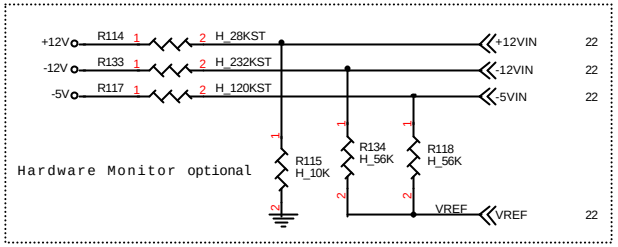

Chasiss Intrusion Header

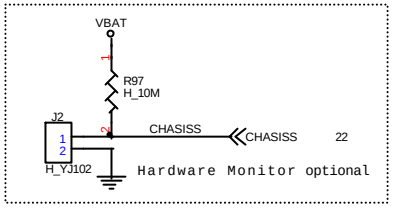

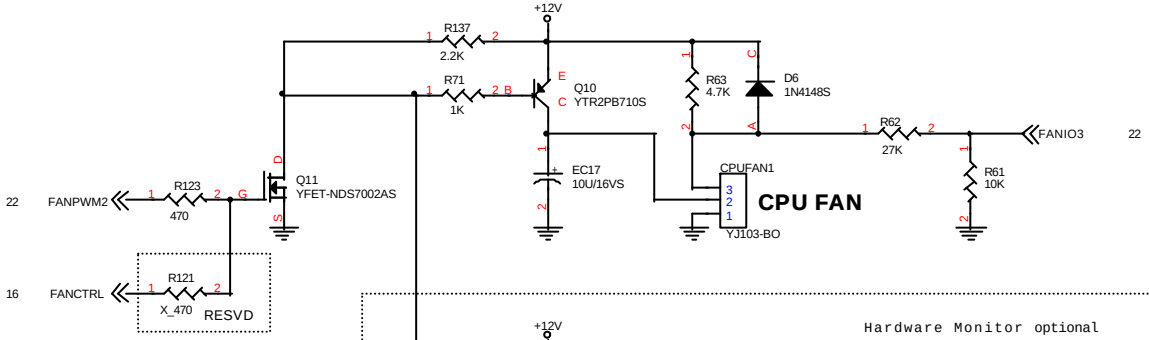

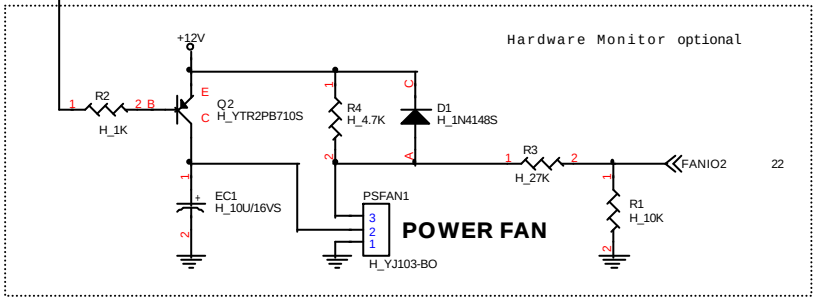

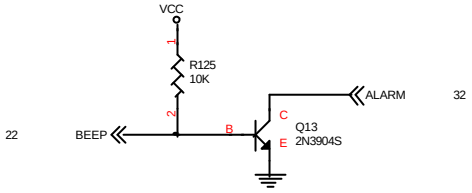

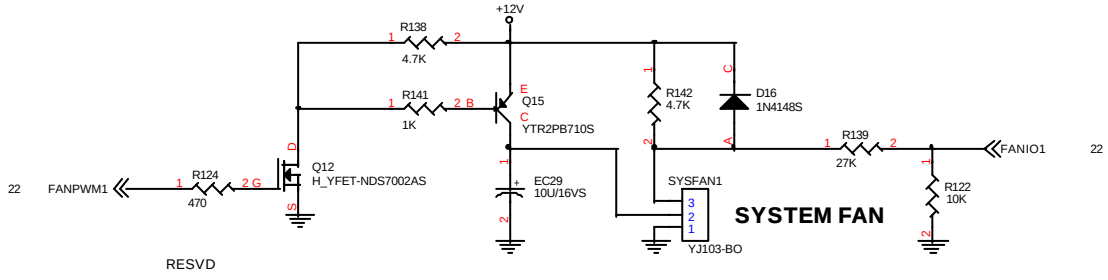

Micro-Star	Title: MS-6315	Rev: 200
Document Number: Hardware Monitor		
Last Revision Date: Wednesday, August 09, 2000	Sheet 23 of 34	

Parallel Port / COM1port & COM2 Header

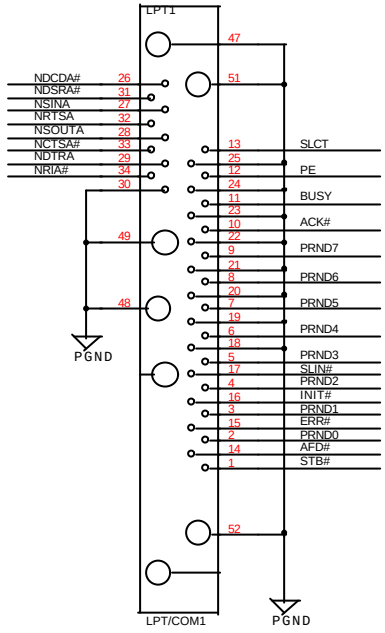

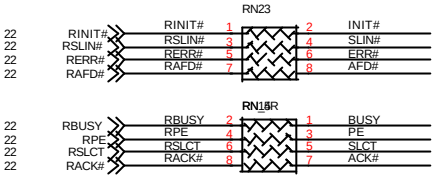

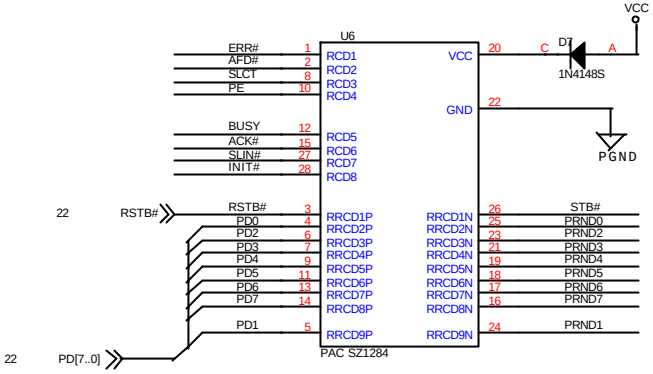

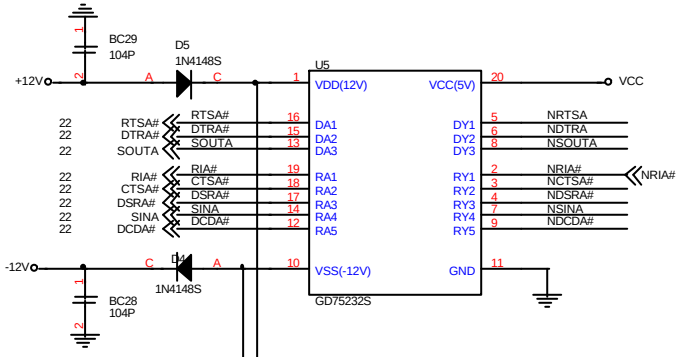

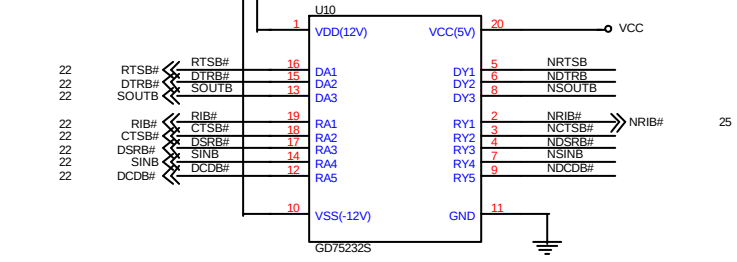

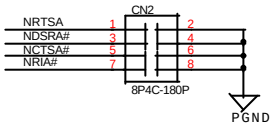

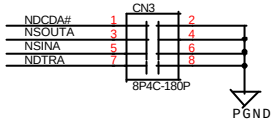

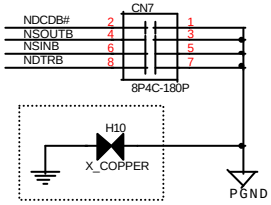

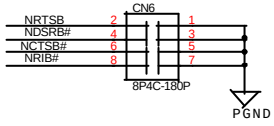

COM2 HEADER

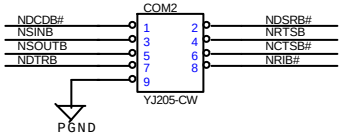

Micro-Star	Title: MS-6315	Rev: 200
Document Number: Parallel Port Header		
Last Revision Date: Wednesday, August 09, 2000	Sheet 24 of 34	

KEYBOARD/MOUSE PORTS

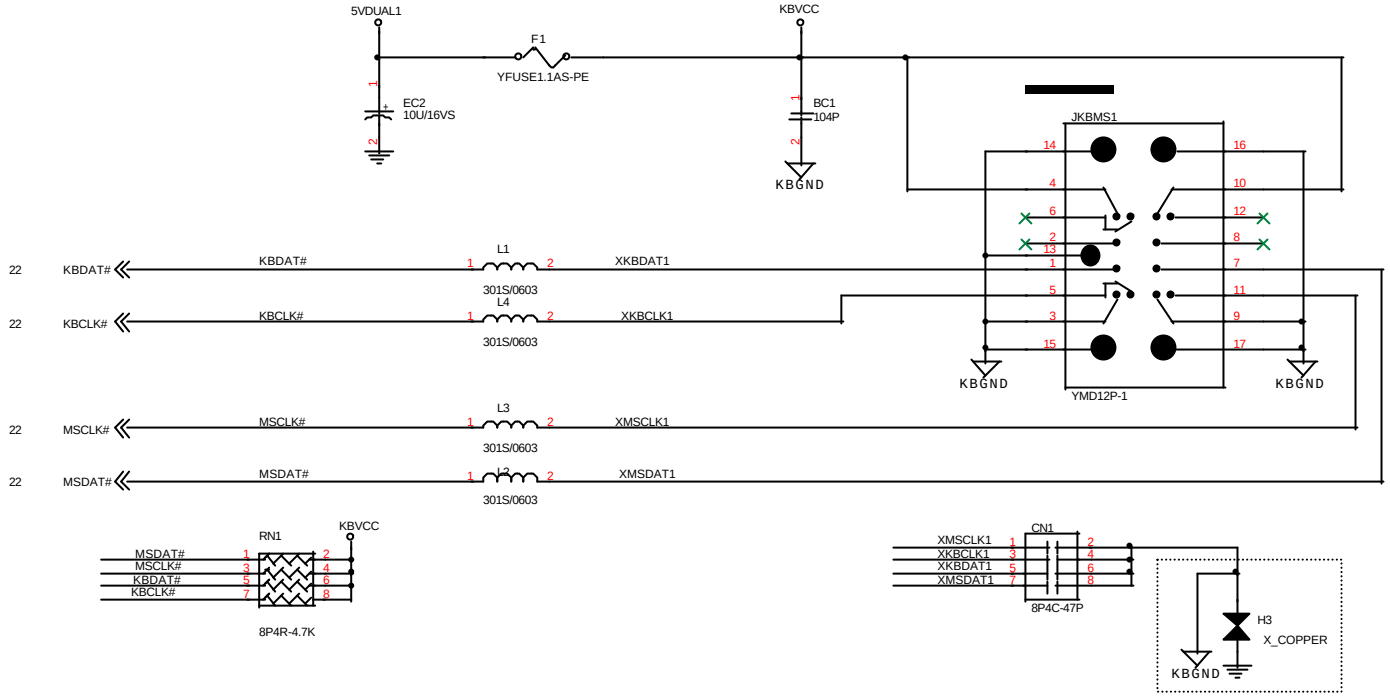

LAN WAKEUP HEADER

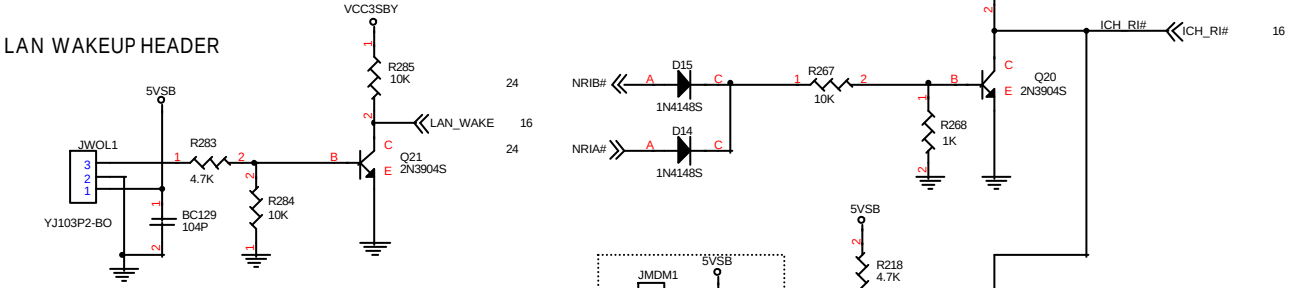

INTERNAL MODEM WAKEUP HEADER

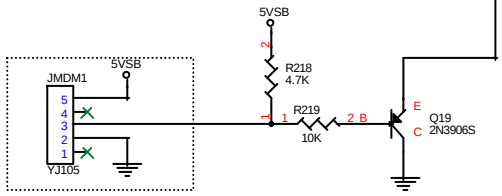

Micro-Star	Title: MS6315	Rev: 200
Document Number: Keyboard board / Mouse port		
Last Revision Date: Wednesday, August 09, 2000	Sheet 25 of 34	

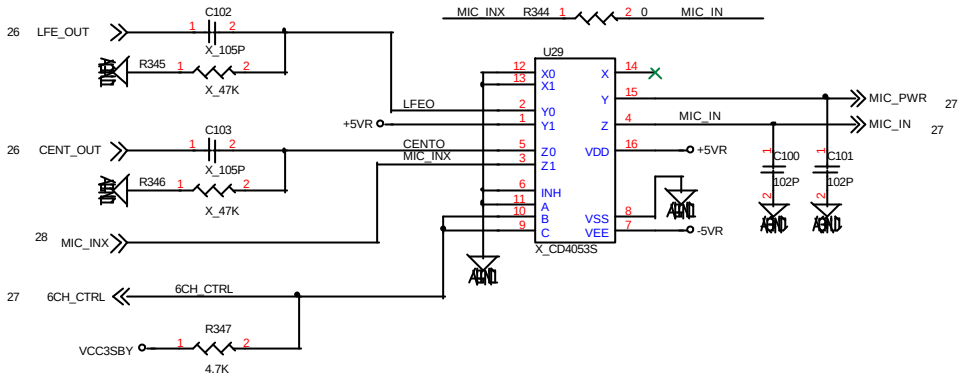

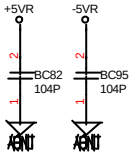

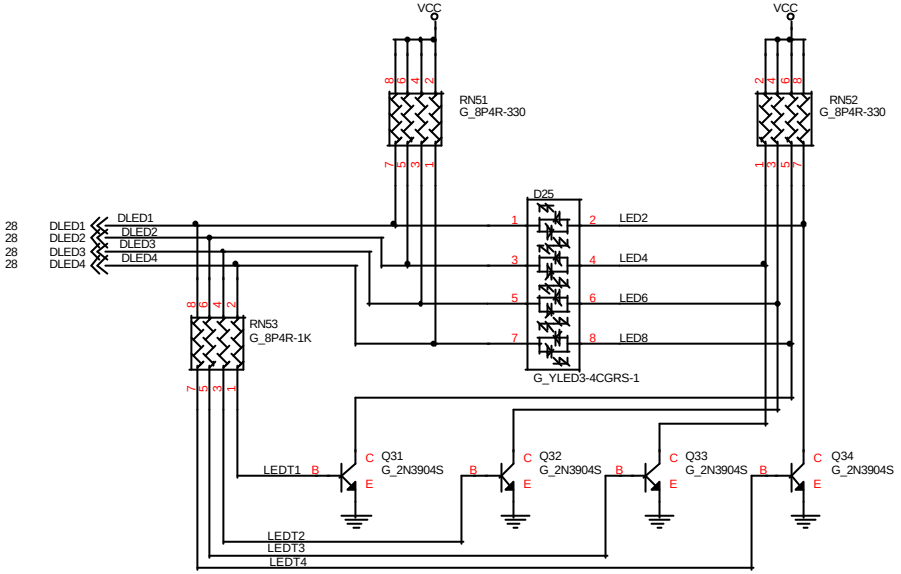

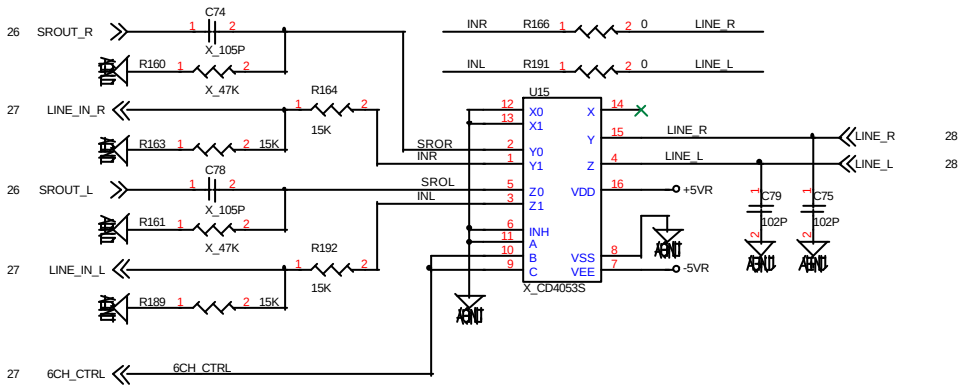

Micro-Star	Title: MS6315	Rev: 200
Document Number: PCI Hardware Audio		
Last Revision Date: Wednesday, August 09, 2000	Sheet 26 of 34	

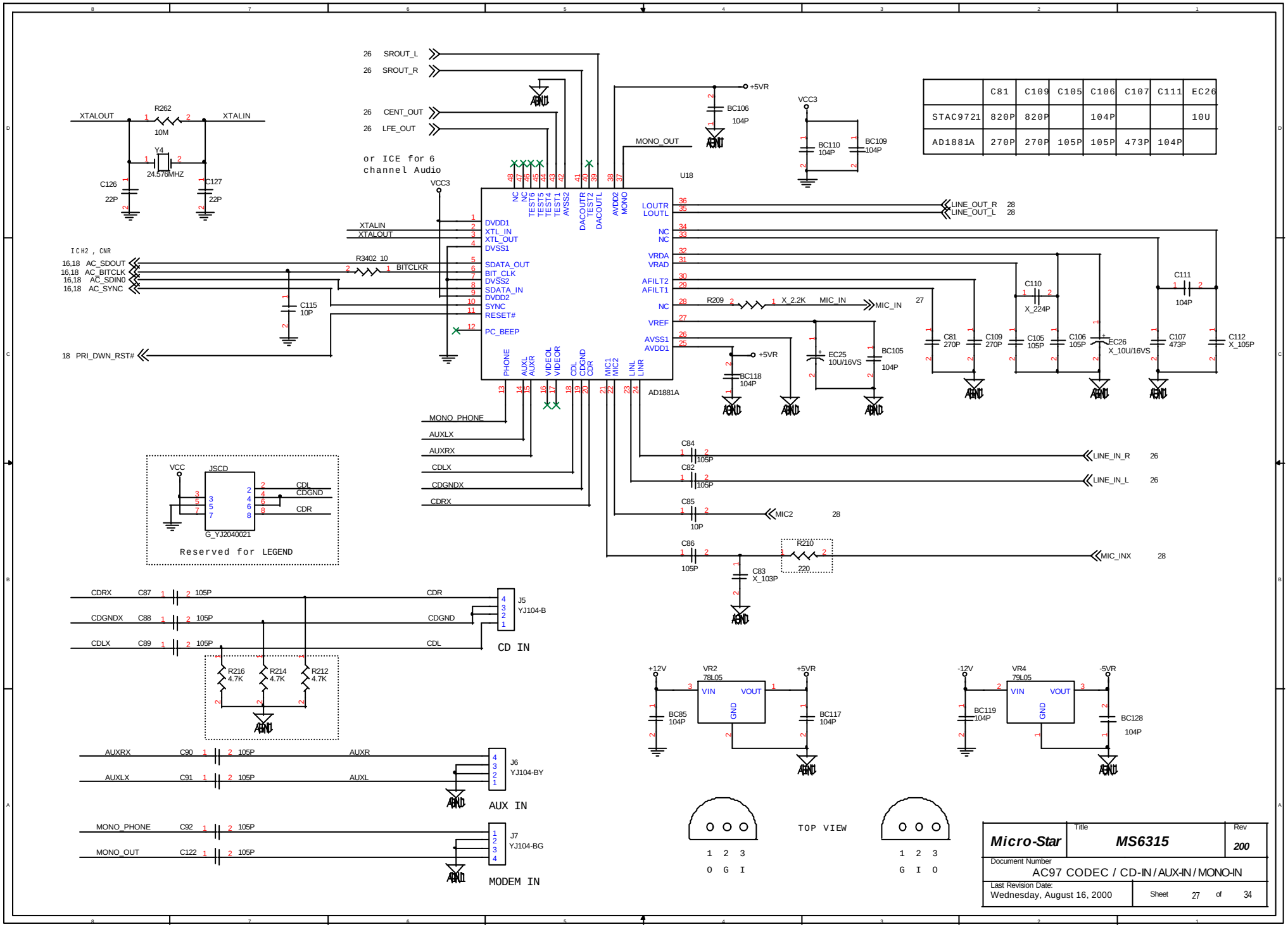

	C81	C109	C105	C106	C107	C111	EC26
STAC9721	820P	820P		104P			10U
AD1881A	270P	270P	105P	105P	473P	104P	

Micro-Star	Title: MS6315		Rev: 200
	Document Number: AC97 CODEC / CD-IN / AUX-IN / MONO-IN		
	Last Revision Date: Wednesday, August 16, 2000	Sheet 27 of 34	

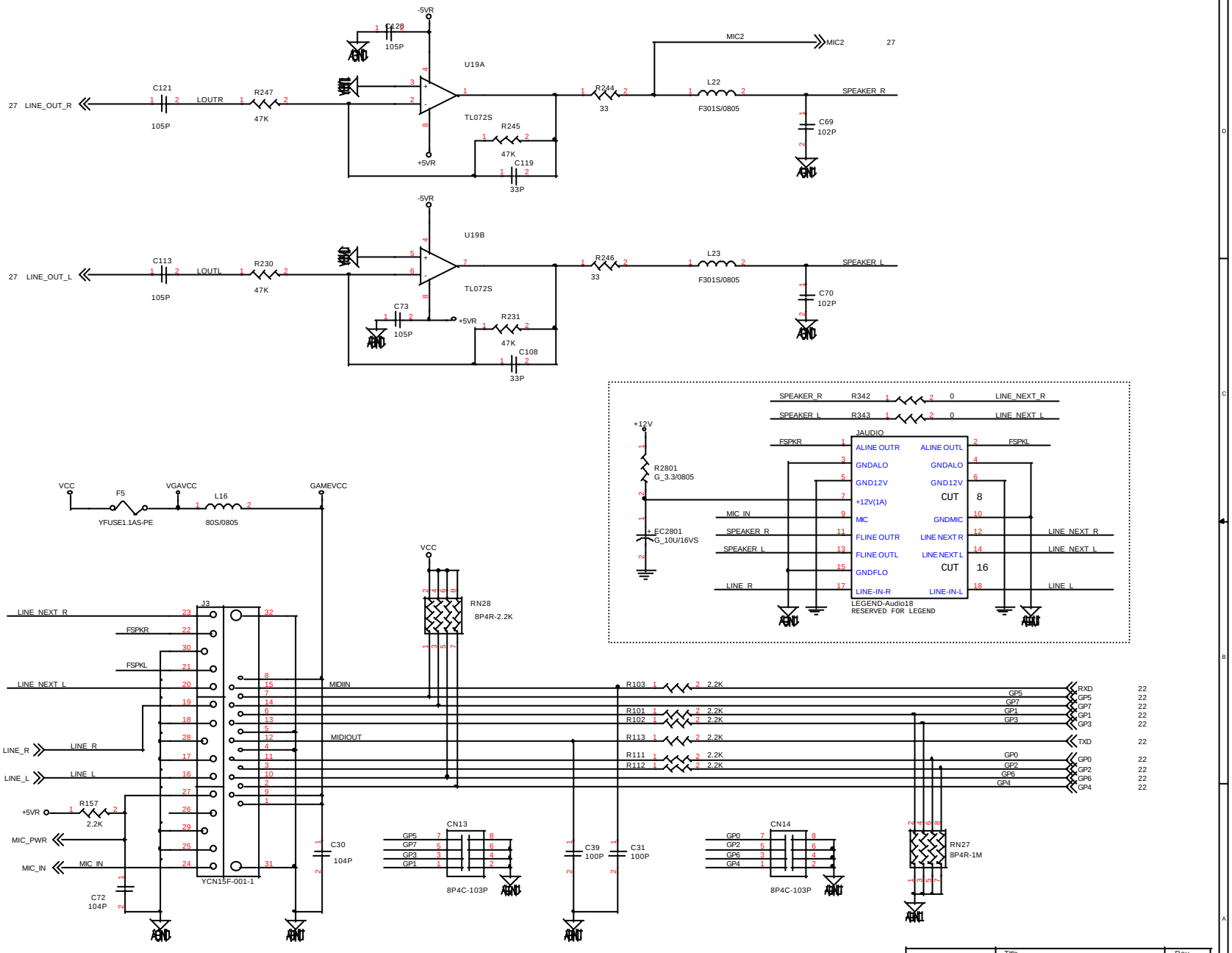

GAME PORT HEADER

Micro-Star	Title: MS6315	Rev: 200
Document Number: Audio Amplifier & Game port Connector		
Last Revision Date: Wednesday, August 09,2000	Sheet 28 of 34	

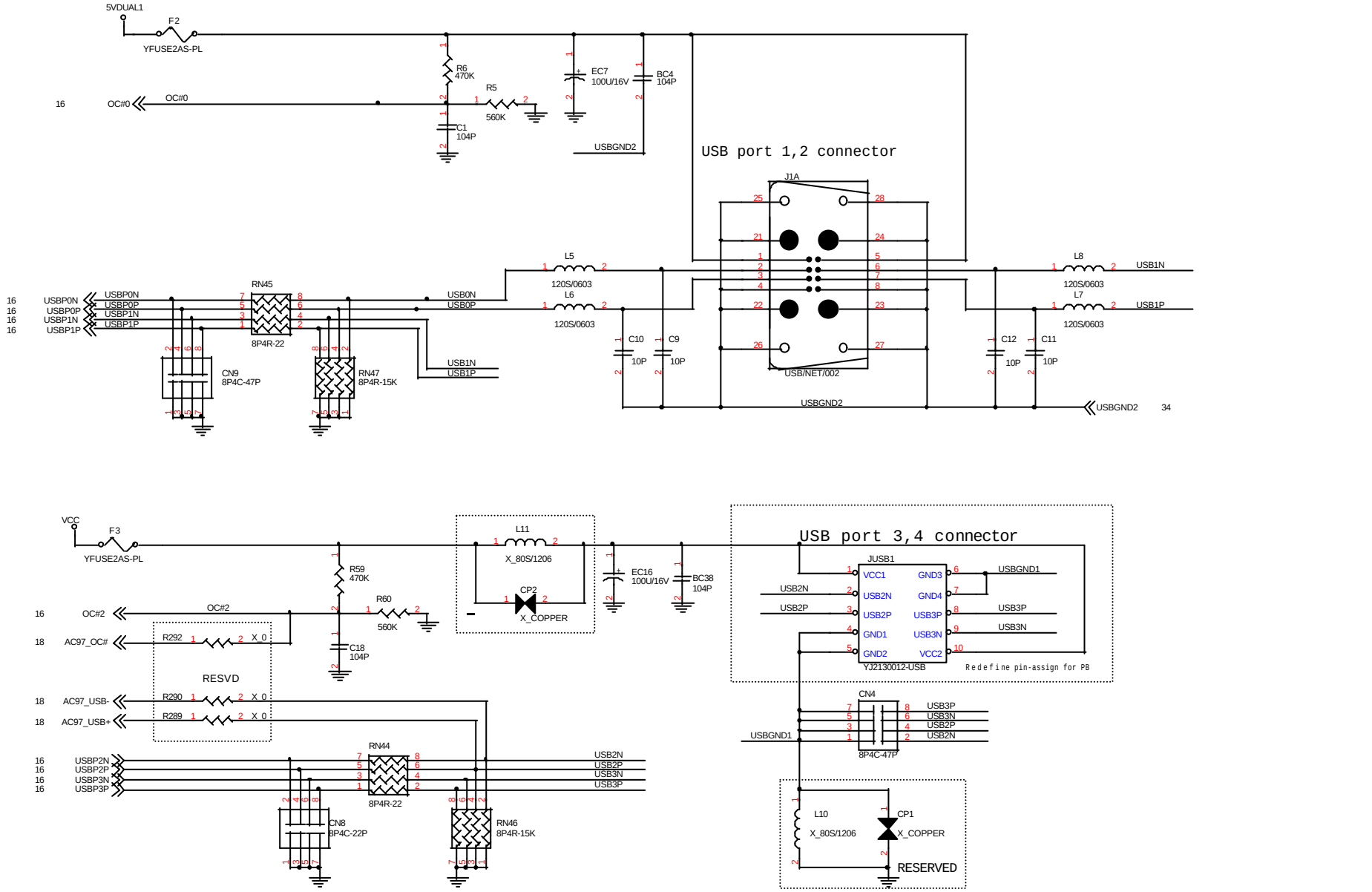

Micro-Star	Title: MS6315	Rev: 200
Document Number: USB Connector		
Last Revision Date: Wednesday, August 09, 2000	Sheet 29 of 34	

VRM 8.4

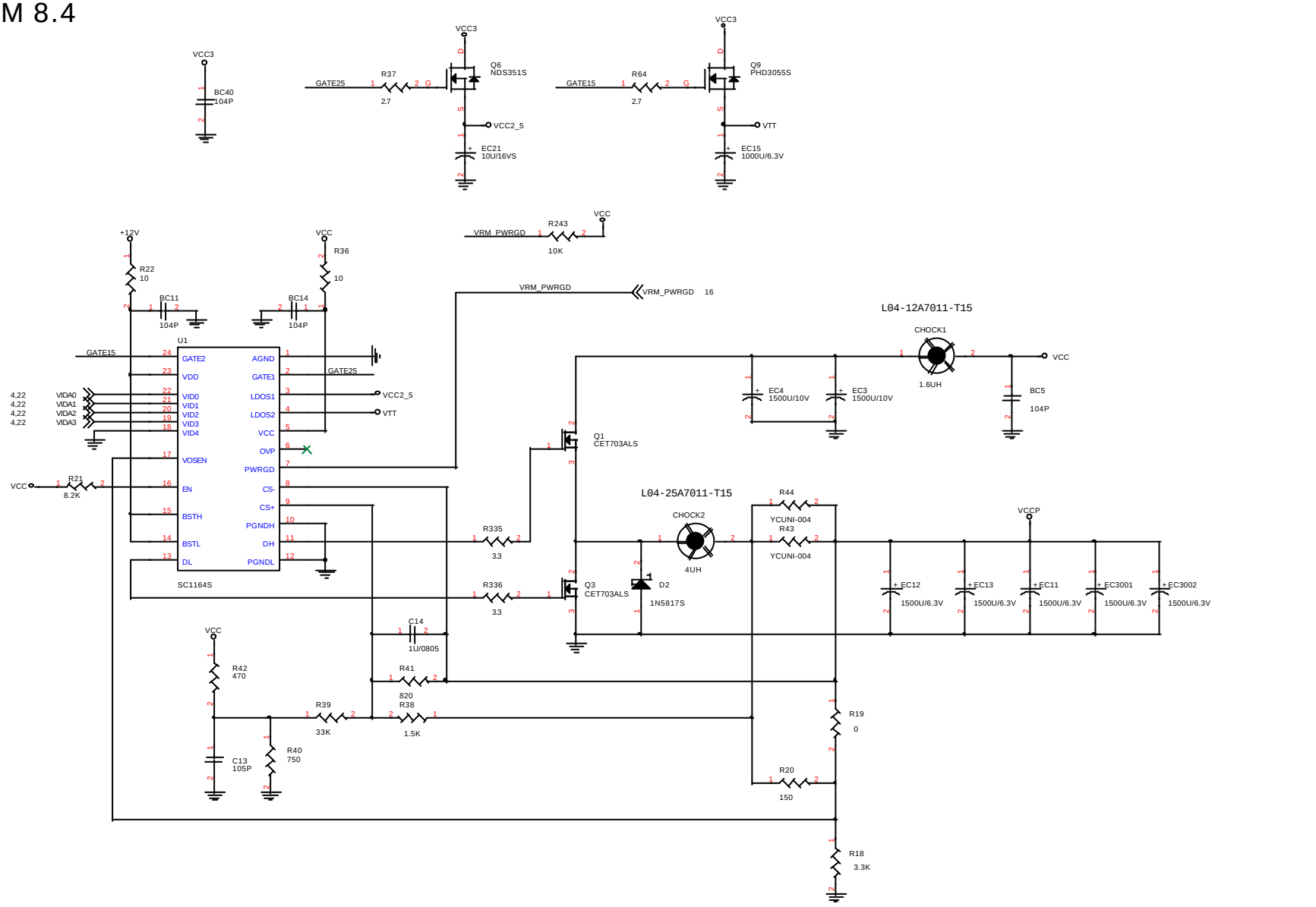

Micro-Star	Title: MS6315	Rev: 200
Document Number: VRM 8.4 (SC1164) / VCCP , VCC2_5 , VTT		
Last Revision Date: Wednesday, August 09,2000	Sheet 30 of 34	

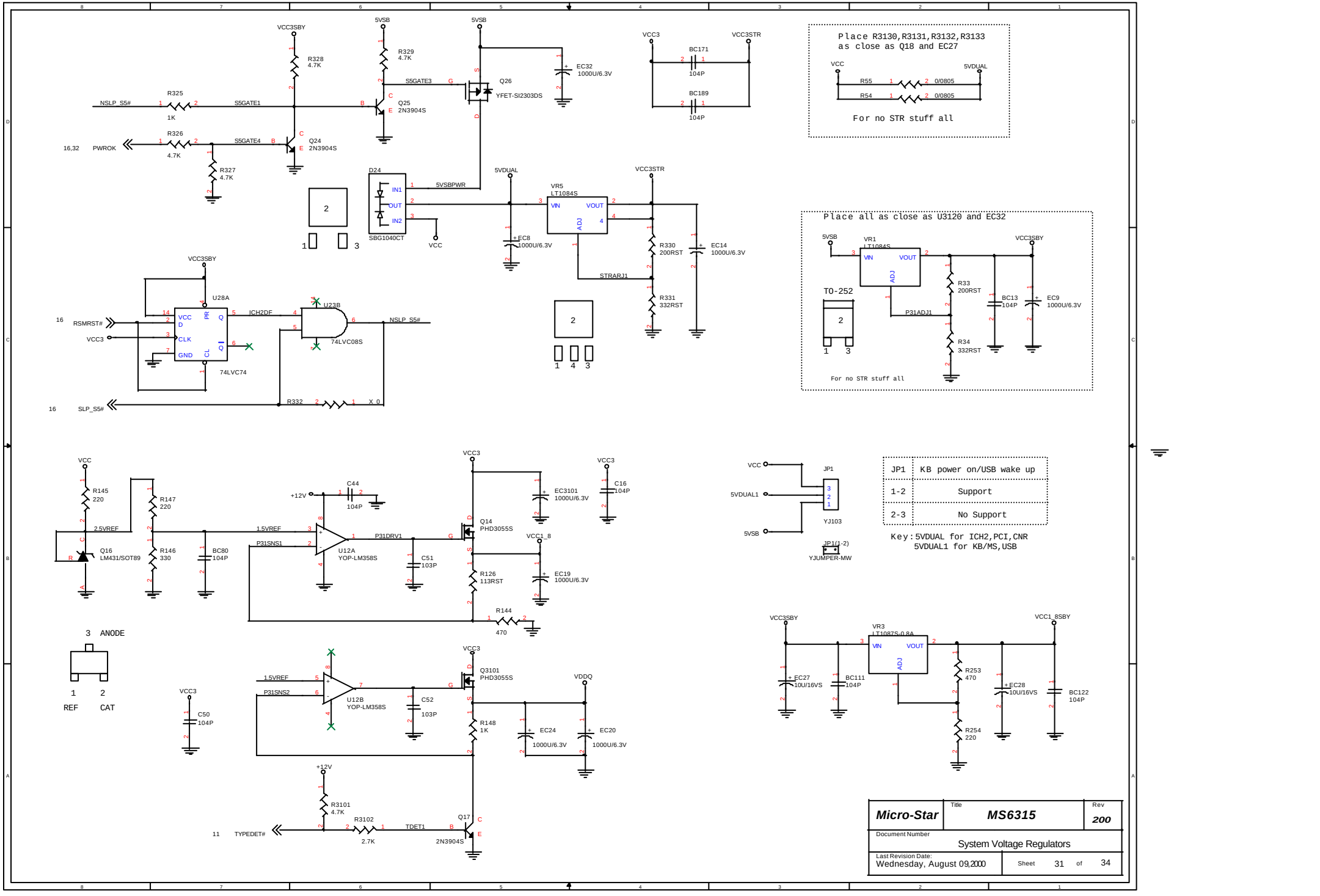
VCC3SBY
5VSB
5VSB
R328 4.7K
R329 4.7K
S5GATE3
Q26
YFET-SI2303DS
EC32 1000U/6.3V
R325 1K
NSLP_S5#
S5GATE1
Q25 2N3904S
R326 4.7K
16,32 PWROK
S5GATE4
Q24 2N3904S
R327 4.7K
D24
SBG1040CT
5VSBPWR
VCC
5VDUAL
VR5 LT1084S
VIN
VOUT
ADJ
EC8 1000U/6.3V
VCC3STR
R330 200RST
EC14 1000U/6.3V
STRARJ1
R331 332RST
VCC3
BC171 104P
BC189 104P
VCC3STR
Place R3130,R3131,R3132,R3133 as close as Q18 and EC27
VCC
5VDUAL
R55 0/0805
R54 0/0805
For no STR stuff all
Place all as close as U3120 and EC32
5VSB
VR1 LT1084S
VCC3SBY
TO-252
P31ADJ1
R33 200RST
R34 332RST
BC13 104P
EC9 1000U/6.3V
For no STR stuff all
VCC3SBY
U28A
16 RSMRST#
VCC3
VCC D CLK GND PR CL Q
ICH2DF
U23B
74LVC08S
NSLP_S5#
74LVC74
16 SLP_S5#
R332
X 0
VCC
R145 220
R147 220
2.5VREF
Q16 LM431/SOT89
R146 330
BC80 104P
1.5VREF
P31SNS1
U12A YOP-LM358S
+12V
C44 104P
VCC3
Q14 PHD3055S
EC3101 1000U/6.3V
C16 104P
P31DRV1
C51 103P
VCC1_8
R126 113RST
EC19 1000U/6.3V
R144 470
3 ANODE
1 REF
2 CAT
VCC3
C50 104P
1.5VREF
P31SNS2
U12B YOP-LM358S
C52 103P
Q3101 PHD3055S
VDDQ
R148 1K
EC24 1000U/6.3V
EC20 1000U/6.3V
+12V
R3101 4.7K
R3102 2.7K
11 TYPEDET#
TDET1
Q17 2N3904S
VCC
5VDUAL1
5VSB
JP1
YJ103
JP1(1-2)
YJUMPER-MW
JP1 | KB power on/USB wake up
1-2 | Support
2-3 | No Support
Key:5VDUAL for ICH2,PCI,CNR
5VDUAL1 for KB/MS,USB
VCC3SBY
VR3 LT1087S-0.8A
VCC1_8SBY
EC27 10U/16VS
BC111 104P
R253 470
EC28 10U/16VS
BC122 104P
R254 220
Micro-Star
Title
MS6315
Rev
200
Document Number
System Voltage Regulators
Last Revision Date:
Wednesday, August 09,2000
Sheet 31 of 34

Front Panel & Power Connector

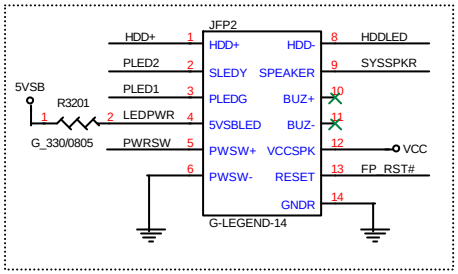

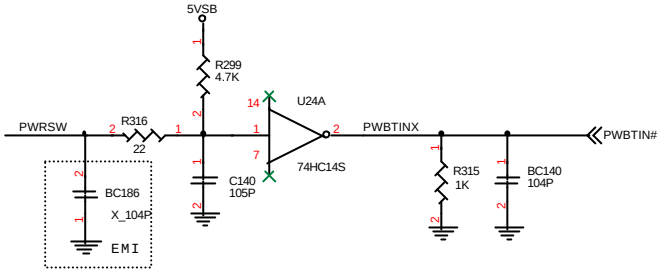

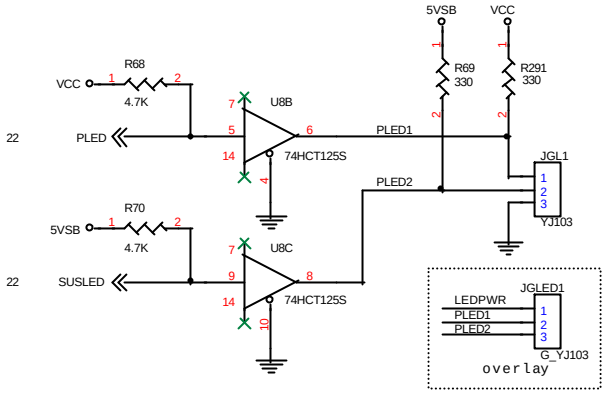

ESD Protect

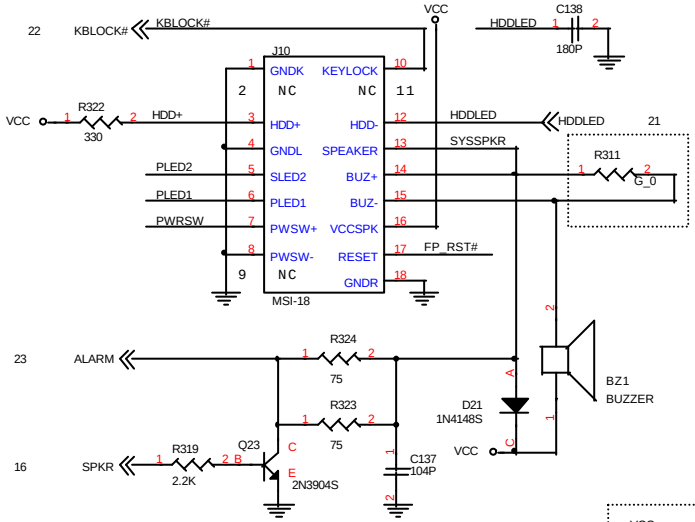

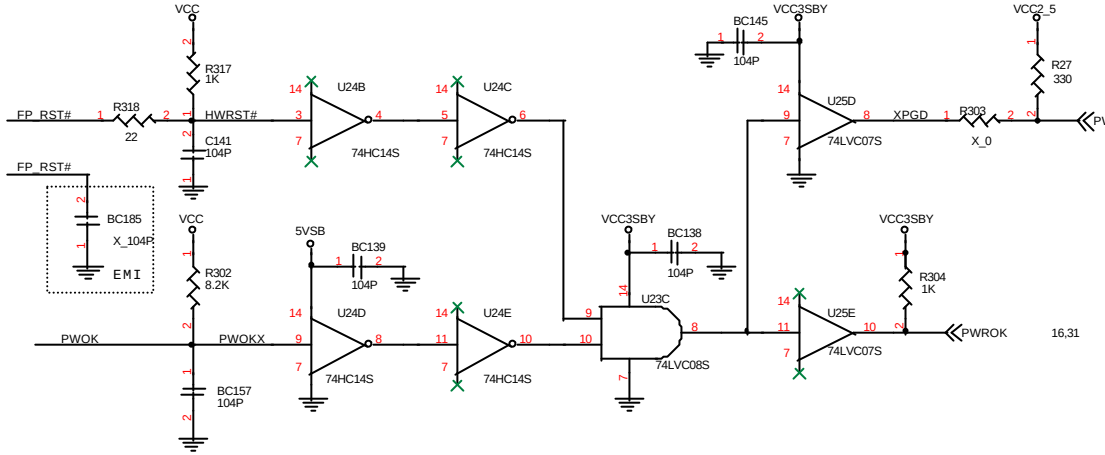

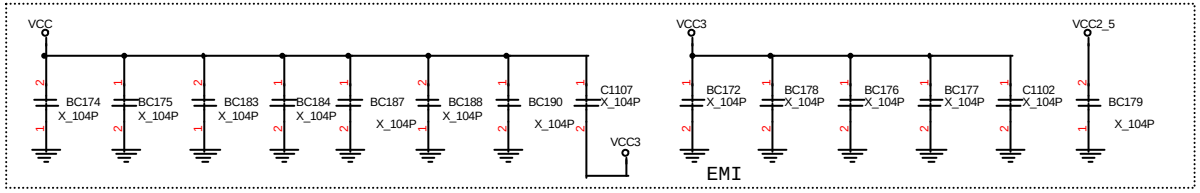

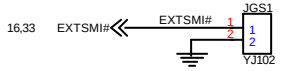

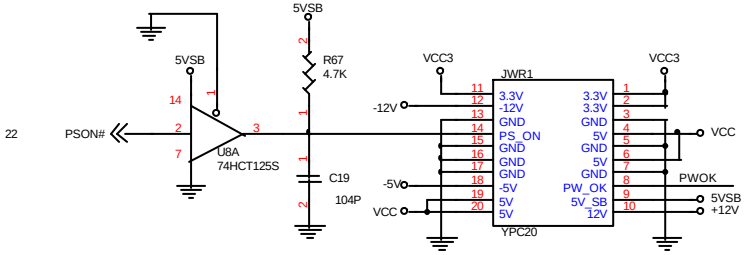

BULK POWER DECOUPLING

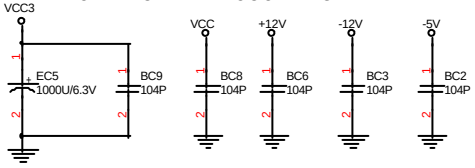

Micro-Star	Title: MS6315	Rev: 200
Document Number: Front Panel and ATX power Connector		
Last Revision Date: Wednesday, August 09, 2000	Sheet 32 of 34	

PULL-UP RESISTORS

PCI BUS

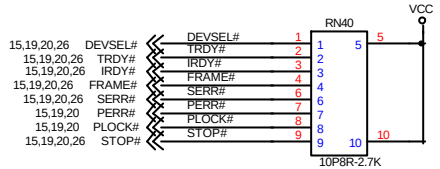

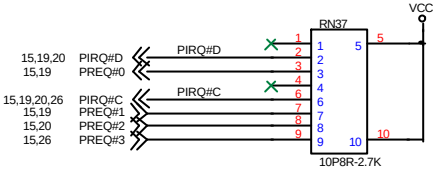

ICH

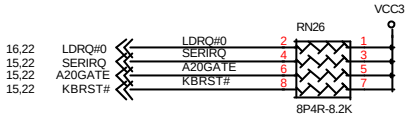

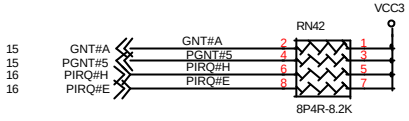

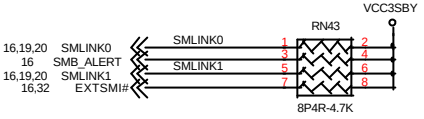

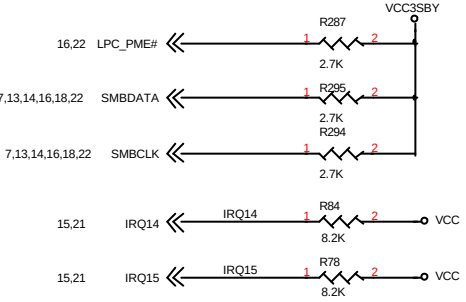

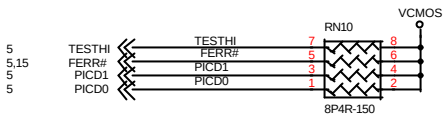

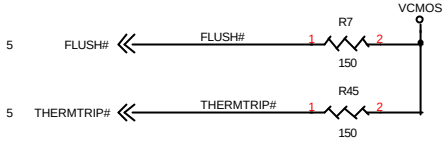

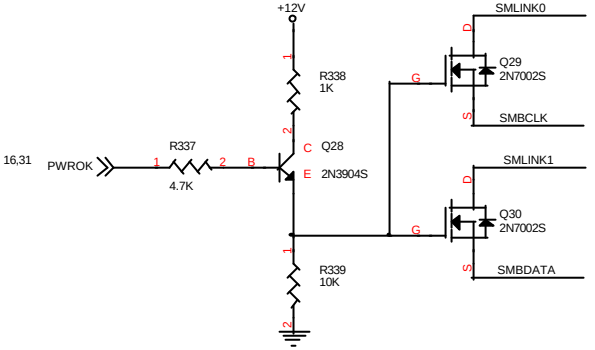

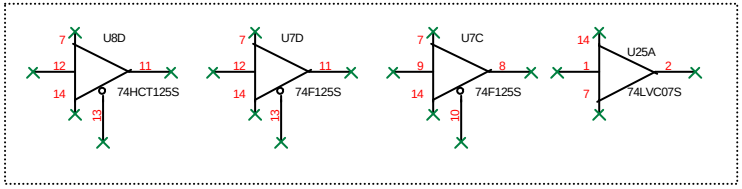

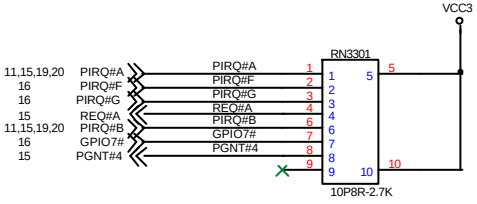

Micro-Star	Title: MS6315	Rev: 200
Document Number: Pull-Up Resistors		
Last Revision Date: Wednesday, August 09, 2000	Sheet 33 of 34	

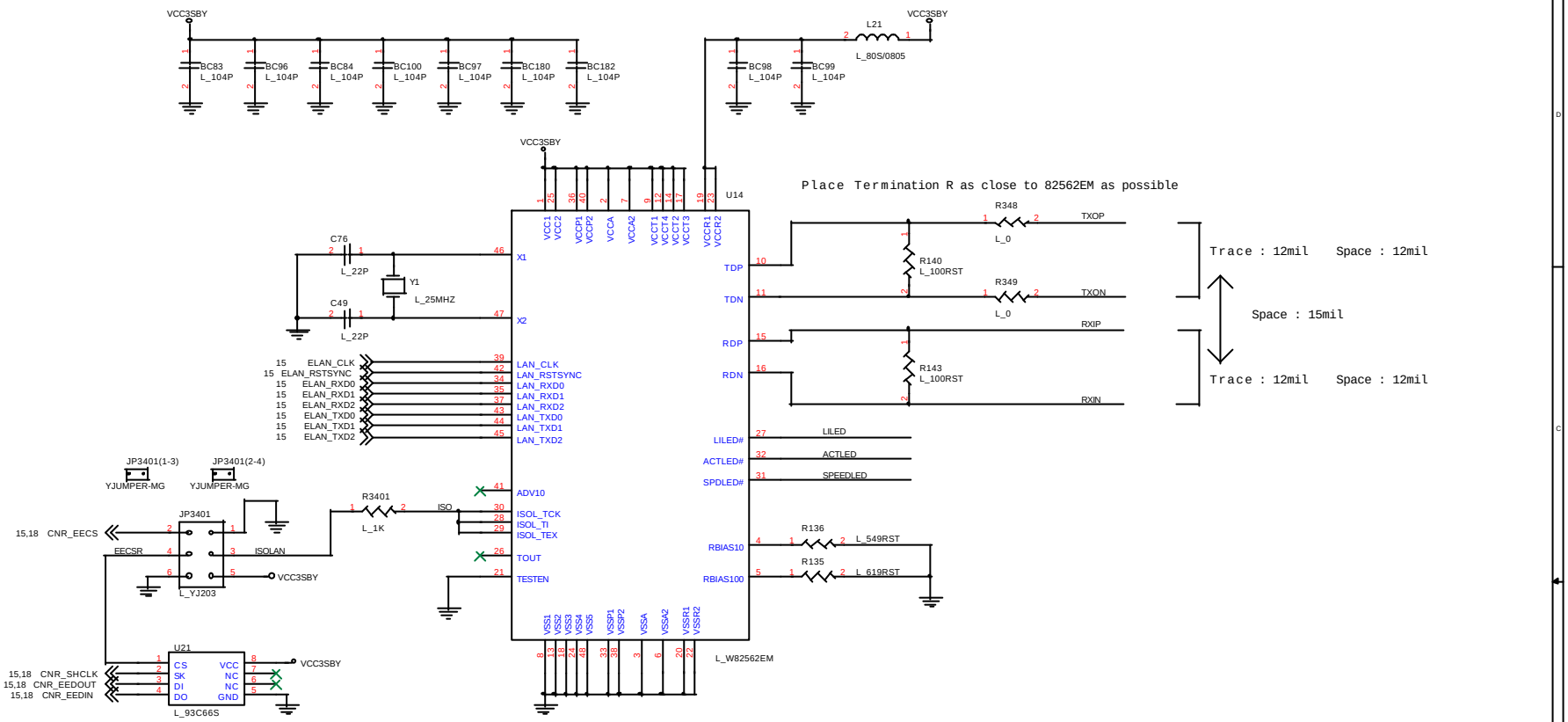

JP3401	On board LAN
1-3,2-4	Enable
3-5,4-6	Disable

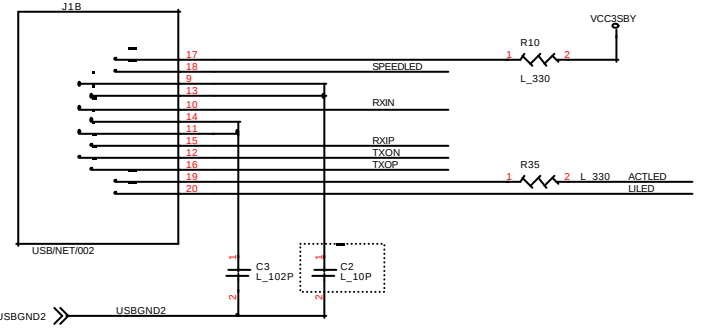

Micro-Star	Title: MS6315		Rev: 200
Document Number: LAN Connector & I562EM (Kinnereth+)			
Last Revision Date: Wednesday, August 09,2000	Sheet 34 of 34		

MS-6315 Micro-ATX

Intel PPGA 370 Processor

Intel Solano2 Chipset

Winbond 83627HF-AW LPC I/O

Creative CT5880 Controller 4-Speaker

ICH2 LAN Controller + Kinnereth Plus

Model option table

Model type	Function	Part Mark
MS6315	Stantard will be del	X_????
Option A	With/ CT5880	A_????
Option L	With/ LAN on board	L_????
Option H	With/ Hardware monitor	H_????
Option S	With/ STR	S_????
Option G	For Legend only	G_????

Stantard+W/LAN ,W/ HW Monitor , W/STR

Title	Page
Cover Sheet	1
Block Diagram	2
GPIO SPEC	3
370PGA Socket	4,5
GTL Termination	6
Clock Synthesizer	7
GMCH	8,9,10
AGP / AIMM Display Cache	11
Graphics Connectors	12
System Memory	13,14
ICH	15,16
FWH	17
CNR Riser	18
PCI Connectors	19,20
ATA66 Connectors	21
LPC I/O	22
Hardware monitor	23
Parallel / Serial Port	24
Keyboard/Mouse Connectors	25
PCI Audio Controllor	26
AC'97 Codec	27
Audio/Game Port	28
USB HUB & USB Connectors	29
VRM 8.4	30
Voltage Regulators	31
Front Panel	32
Pull-up Resistors	33
LAN	34
History	

Block Diagram

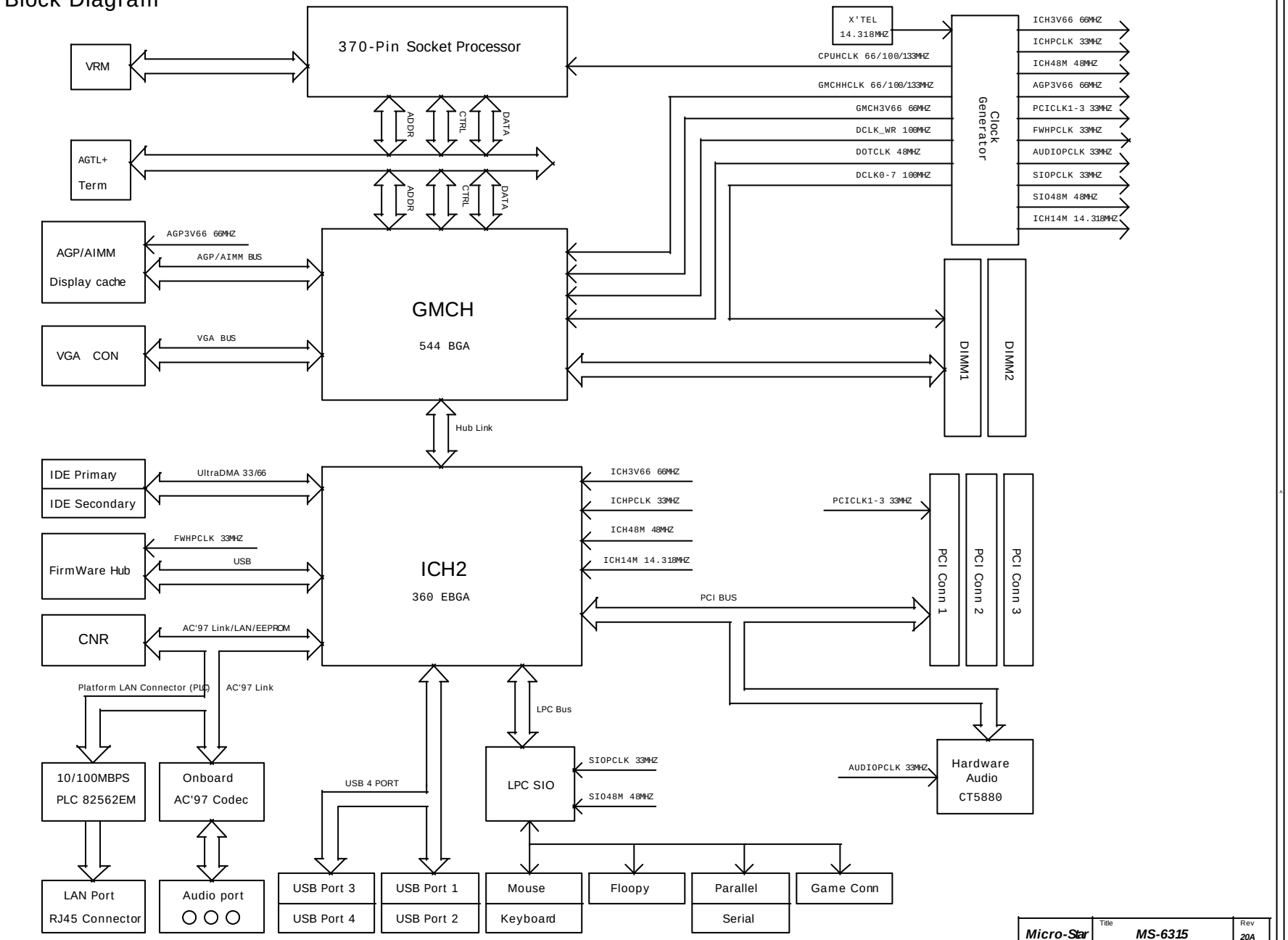

Micro-Star	Title: MS-6315	Rev: 20A
Document Number: Block Diagram		
Last Revision Date: Friday, September 22, 2000	Sheet 2 of 34	

General Purpose I/O Spec.

ICH

GPIO Pin	Type	Function
GPIO 0	I	Pull up (REQ#A)
GPIO 1	I	PREQ#5
GPIO 2~4	I	NC
GPIO 5	I	NC
GPIO 6	I	NC
GPIO 7	I	NC
GPIO 8	I	LAN Wake Up
GPIO 9	I	Not Implemented
GPIO 10	I	Not Implemented
GPIO 11	I	SMB_ALERT
GPIO 12	I	External SMI
GPIO 13	I	LPC PME
GPIO 14~15	I	Not Implemented
GPIO 16	O	Pull up(GNT#A)
GPIO 17	O	PGNT#5
GPIO 18~20	O	NC
GPIO 21	O	FAN Ctrl
GPIO 22	O	Pullup
GPIO 23	OD	BIOS update lock(H)/unlock(L)
GPIO 24	O	NC
GPIO 25	O	NC
GPIO 26	O	Not Implemented
GPIO 27	I/O	NC
GPIO 28	I/O	NC
GPIO 29~31	I/O	Not Implemented

FWH

GPIO Pin	Type	Function
GPI 0	I	ATA IDE 1 Detect
GPI 1	I	ATA IDE 2 Detect
GPI 2	I	GPI2=L GPI3=H Flash from FDD
GPI 3	I	GPI2=H GPI3=L Boot Auto clear CMOS

ICH2 SMLINK0,1 Connect to PCI2 for PCI card AOL

PCI Config.

DEVICE	ICH INT Pin	IDSEL
PCI Slot 1	INTA# INTB# INTC# INTD#	AD16
PCI Slot 2	INTB# INTC# INTD# INTA#	AD17
PCI Slot 3	INTC# INTD# INTA# INTB#	AD18
CT5880	INTC#	AD26

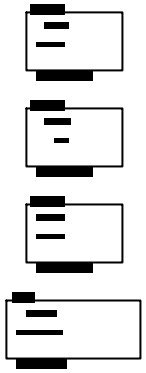

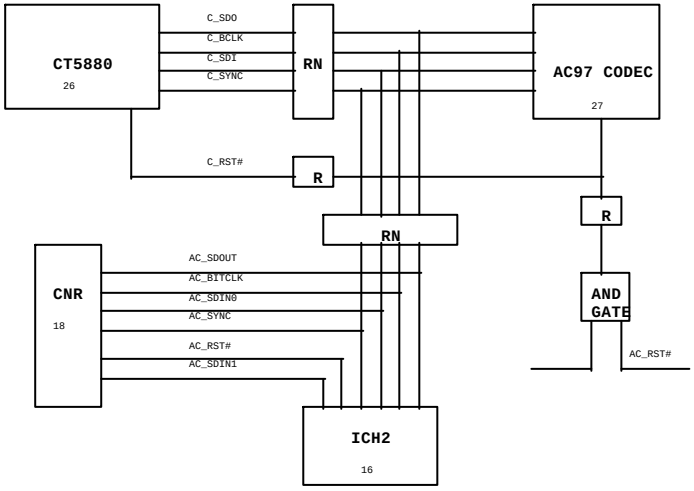

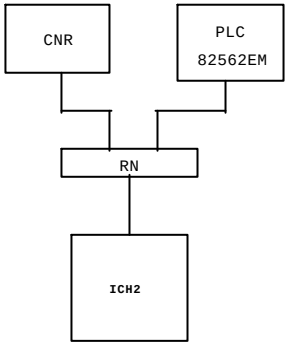

Micro-Star	MS-6315	20A
BIOS GPIO SPEC.		
Friday, September 22, 2000	3	34

370PGA Socket Part 1

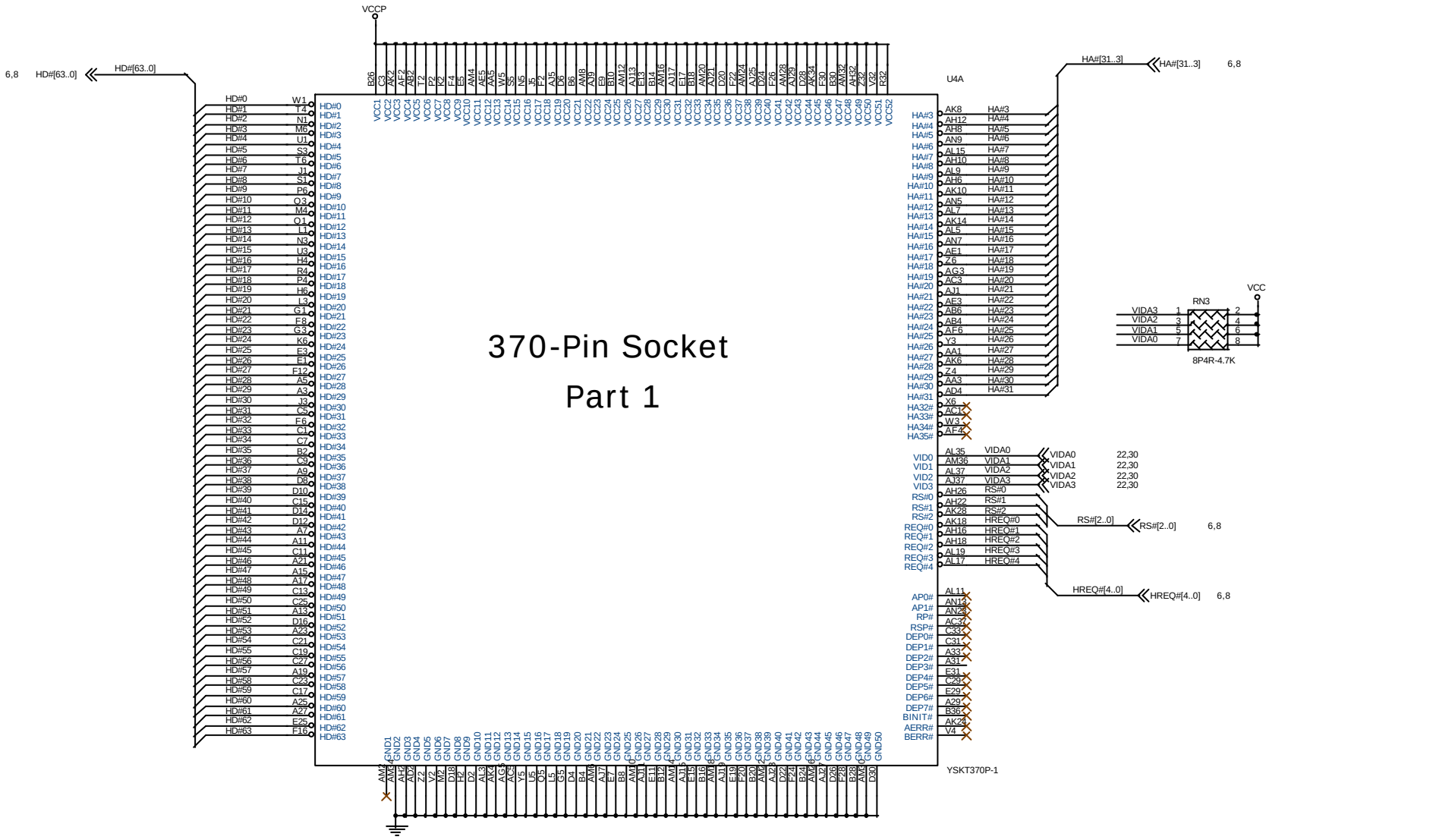

Micro-Star	Title: MS-6315		Rev: 20A
Document Number: SOCKET 370 PGA-1			
Last Revision Date: Friday, September 22, 2000		Sheet 4 of 34	

370PGA Socket Part 2

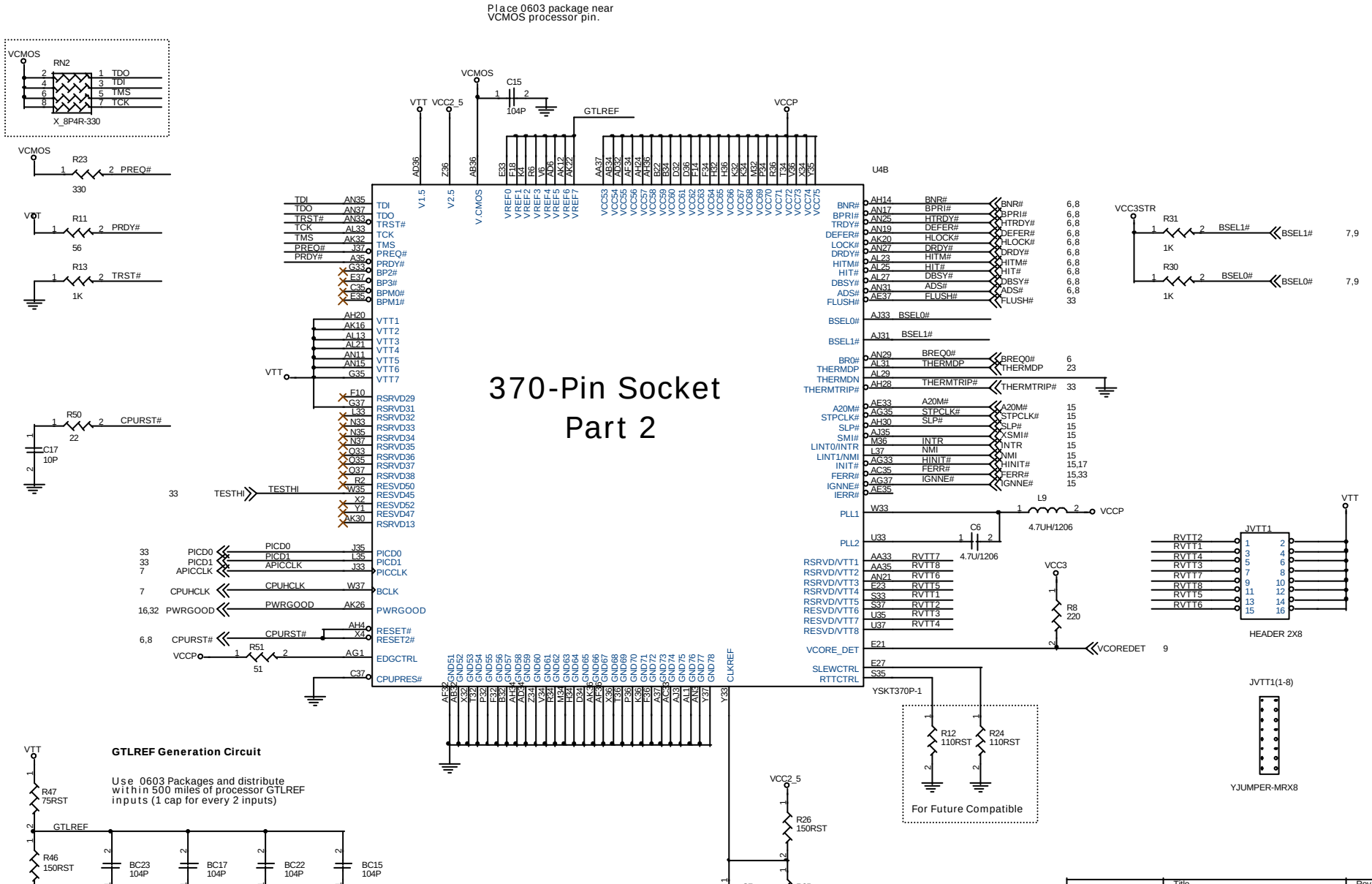

GTL Termination

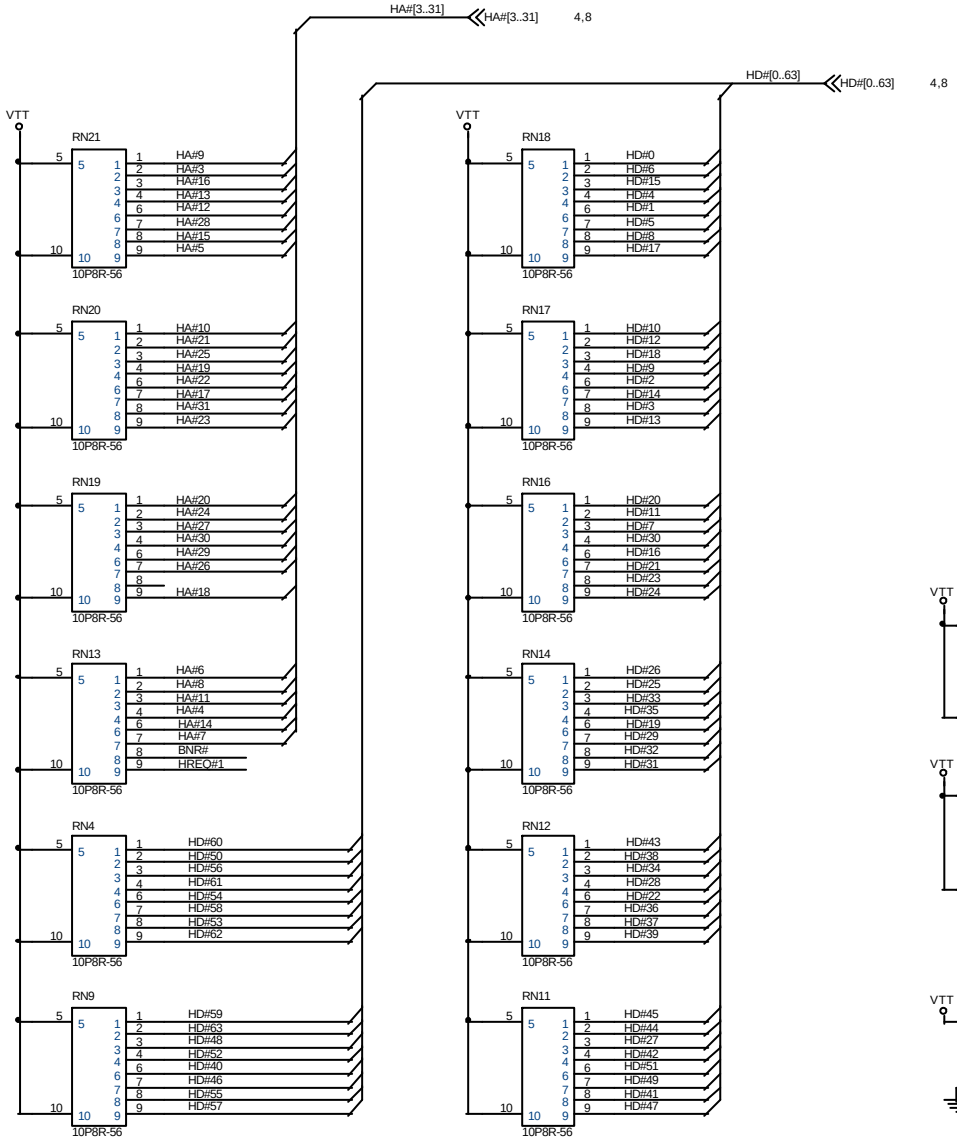

GTL VTT Bypass Capacitor

Every two R-packs add one 0.1U Cap.

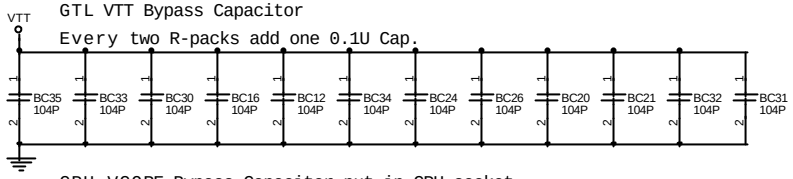

CPU VCORE Bypass Capacitor put in CPU socket

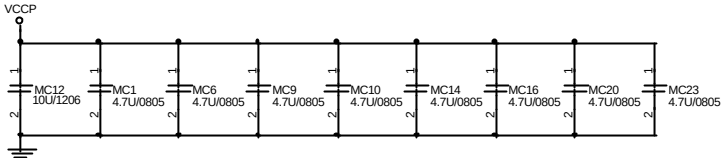

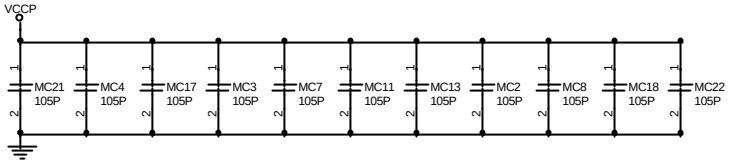

For VCCP

11 PCS 105P Cap. Placement

9 PCS 4.7U/0805 Cap. Placement

1 PCS 10U/1206 Cap. Placement

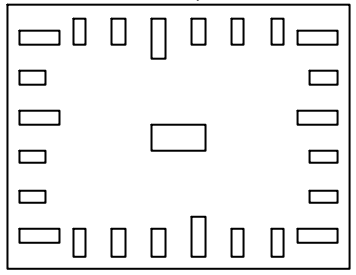

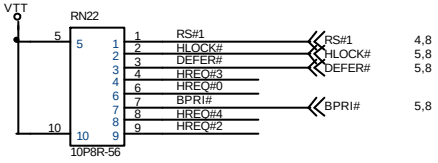

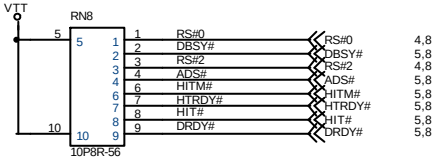

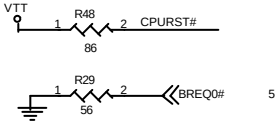

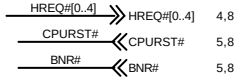

Micro-Star	Title: MS-6315	Rev: 20A
Document Number: GTL Termination		
Last Revision Date: Friday, September 22, 2000	Sheet 6 of 34	

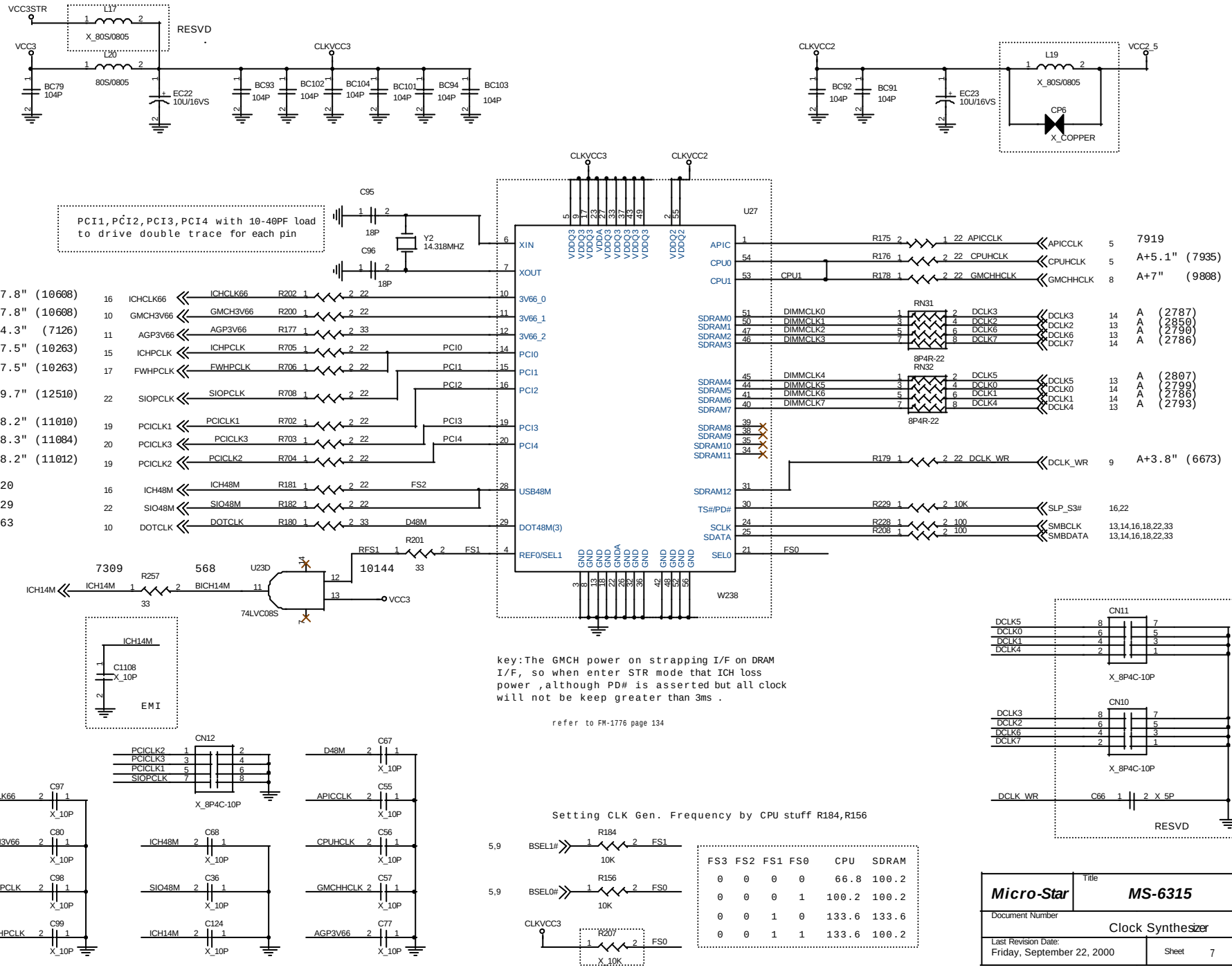
VCC3STR
L17
X_80S/0805
RESVD
VCC3
L20
80S/0805
BC79 104P
EC22 10U/16VS
CLKVCC3
BC93 104P
BC102 104P
BC104 104P
BC101 104P
BC94 104P
BC103 104P
CLKVCC2
BC92 104P
BC91 104P
EC23 10U/16VS
L19
X_80S/0805
VCC2_5
CP6
X_COPPER
PCI1,PCI2,PCI3,PCI4 with 10-40PF load to drive double trace for each pin
C95
18P
Y2
14.318MHZ
C96
18P
U27
XIN
XOUT
3V66_0
3V66_1
3V66_2
PCI0
PCI1
PCI2
PCI3
PCI4
USB48M
DOT48M(3)
REF0/SEL1
APIC
CPU0
CPU1
SDRAM0
SDRAM1
SDRAM2
SDRAM3
SDRAM4
SDRAM5
SDRAM6
SDRAM7
SDRAM8
SDRAM9
SDRAM10
SDRAM11
SDRAM12
TS#/PD#
SCLK
SDATA
SEL0
W238
A+7.8" (10608)
A+7.8" (10608)
A+4.3" (7126)
A+7.5" (10263)
A+7.5" (10263)
A+9.7" (12510)
A+8.2" (11010)
A+8.3" (11084)
A+8.2" (11012)
9720
9729
7563
ICHCLK66
GMCH3V66
AGP3V66
ICHPCLK
FWHPCLK
SIOPCLK
PCICLK1
PCICLK3
PCICLK2
ICH48M
SIO48M
DOTCLK
R202 22
R200 22
R177 33
R705 22
R706 22
R708 22
R702 22
R703 22
R704 22
R181 22
R182 22
R180 33
FS2
D48M
FS1
R201 33
RFS1
10144
7309
568
U23D
74LVC08S
R257 33
ICH14M
BICH14M
VCC3
R175 22 APICCLK
R176 22 CPUHCLK
R178 22 GMCHHCLK
CPU1
RN31
DIMMCLK0
DIMMCLK1
DIMMCLK2
DIMMCLK3
8P4R-22
RN32
DIMMCLK4
DIMMCLK5
DIMMCLK6
DIMMCLK7
8P4R-22
DCLK3
DCLK2
DCLK6
DCLK7
DCLK5
DCLK0
DCLK1
DCLK4
R179 22 DCLK_WR
R229 10K
R228 100
R208 100
SLP_S3#
SMBCLK
SMBDATA
7919
A+5.1" (7935)
A+7" (9808)
A (2787)
A (2850)
A (2790)
A (2786)
A (2807)
A (2799)
A (2786)
A (2793)
A+3.8" (6673)
16,22
13,14,16,18,22,33
13,14,16,18,22,33
key:The GMCH power on strapping I/F on DRAM I/F, so when enter STR mode that ICH loss power ,although PD# is asserted but all clock will not be keep greater than 3ms .
refer to FM-1776 page 134
ICH14M
C1108 X_10P
EMI
CN12
X_8P4C-10P
CN11
X_8P4C-10P
CN10
X_8P4C-10P
DCLK_WR
C66 X_5P
RESVD
C97 X_10P
C80 X_10P
C98 X_10P
C99 X_10P
C68 X_10P
C36 X_10P
C124 X_10P
C67 X_10P
C55 X_10P
C56 X_10P
C57 X_10P
C77 X_10P
Setting CLK Gen. Frequency by CPU stuff R184,R156
BSEL1#
BSEL0#
R184 10K
R156 10K
R207 X_10K
FS3 FS2 FS1 FS0 CPU SDRAM
0 0 0 0 66.8 100.2
0 0 0 1 100.2 100.2
0 0 1 0 133.6 133.6
0 0 1 1 133.6 100.2
Micro-Star
Title
MS-6315
Rev
20A
Document Number
Clock Synthesizer
Last Revision Date:
Friday, September 22, 2000
Sheet 7 of 34

82815, PART 1 : HOST INTERFACE

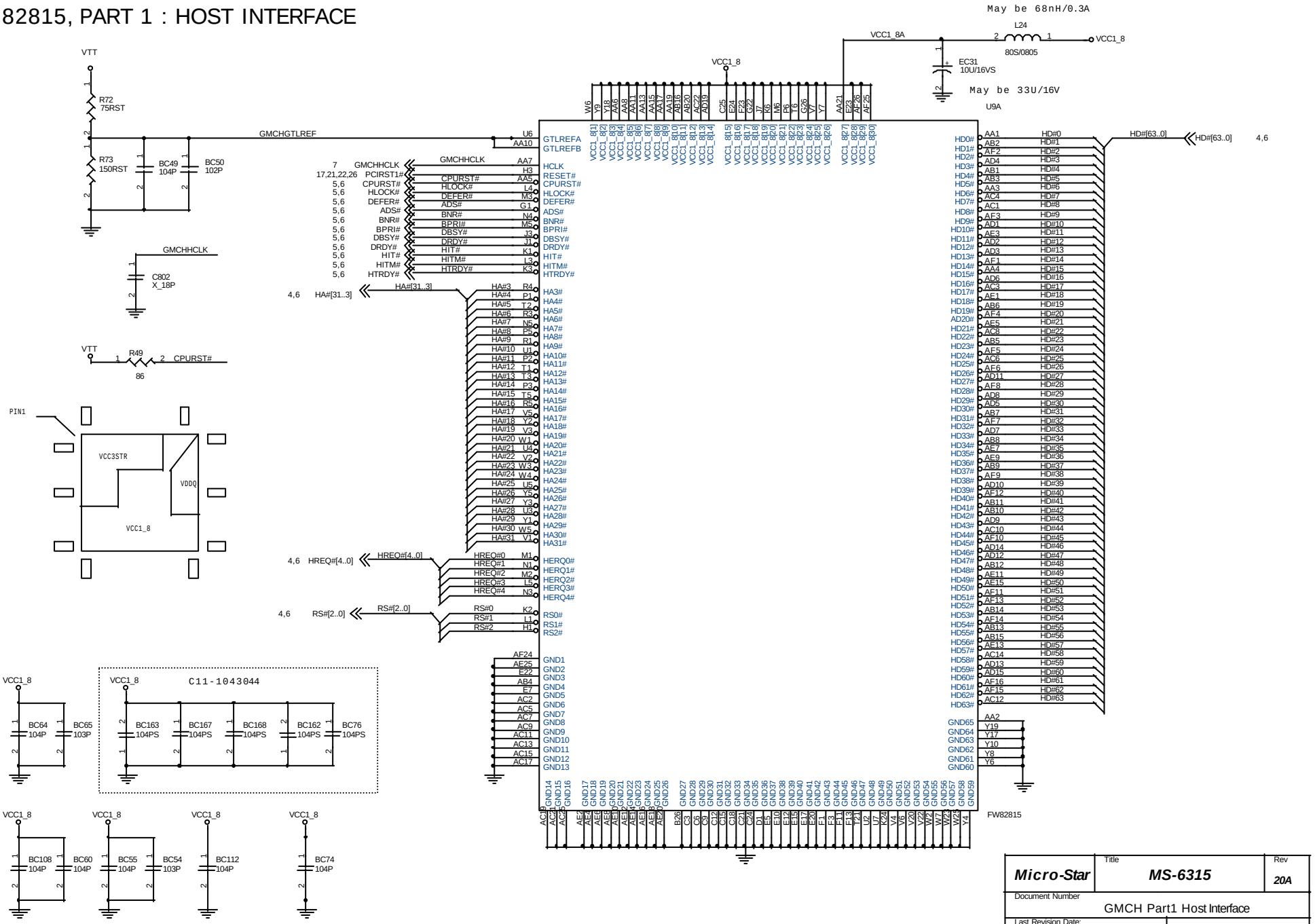

Micro-Star	Title: MS-6315		Rev: 20A
Document Number: GMCH Part1 Host Interface			
Last Revision Date: Friday, September 22, 2000		Sheet 8 of 34	

GMCH, PART 2 : SYSTEM MEMORY

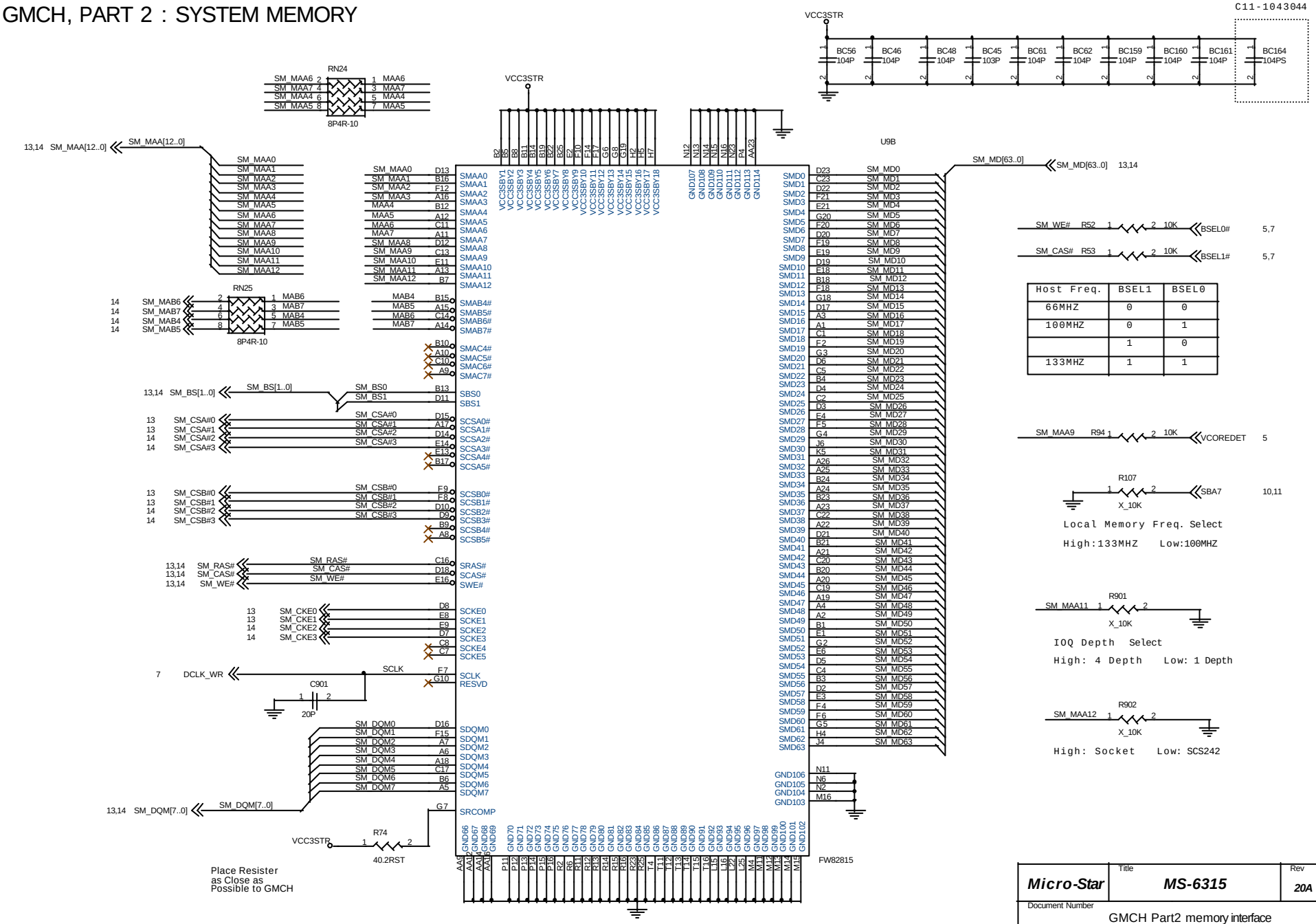

GMCH PART 3 : AGP & VIDEO Interface & HUB link

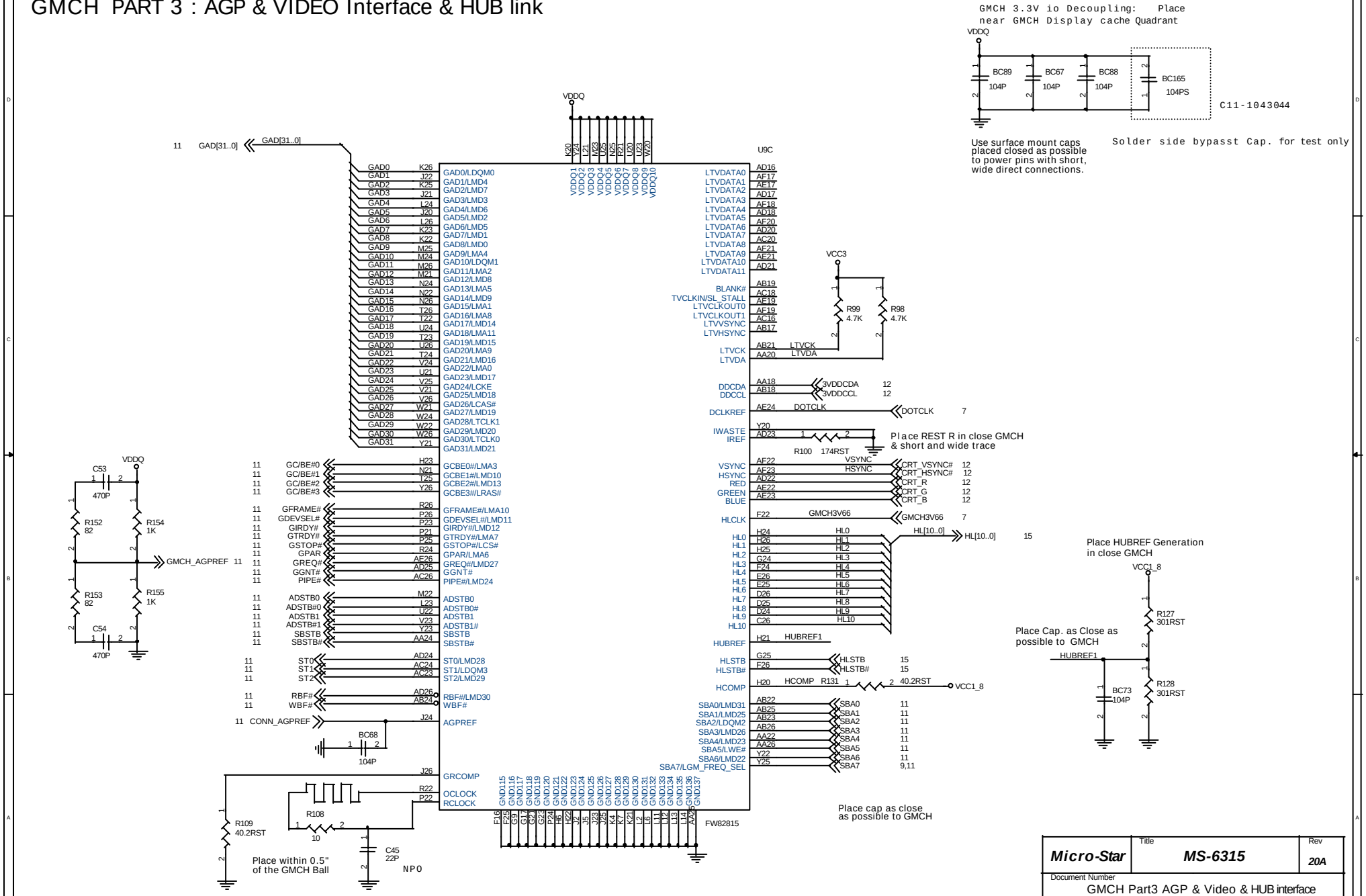

Micro-Star	Title: MS-6315	Rev: 20A
Document Number: GMCH Part3 AGP & Video & HUB interface		
Last Revision Date: Friday, September 22, 2000	Sheet 10 of 34	

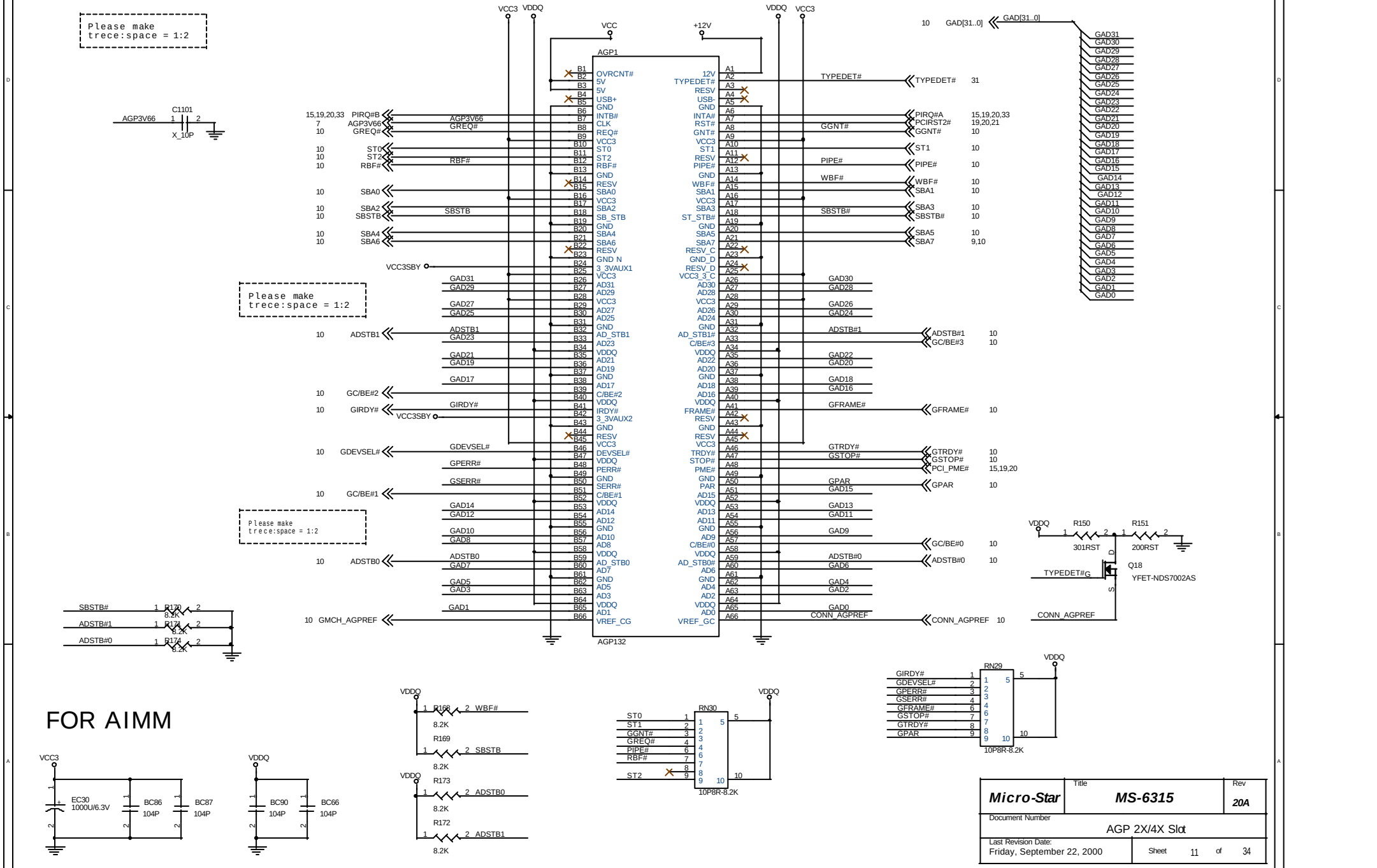

Micro-Star	Title: MS-6315		Rev: 20A
Document Number: AGP 2X/4X Slot			
Last Revision Date: Friday, September 22, 2000		Sheet 11 of 34	

Video Connector

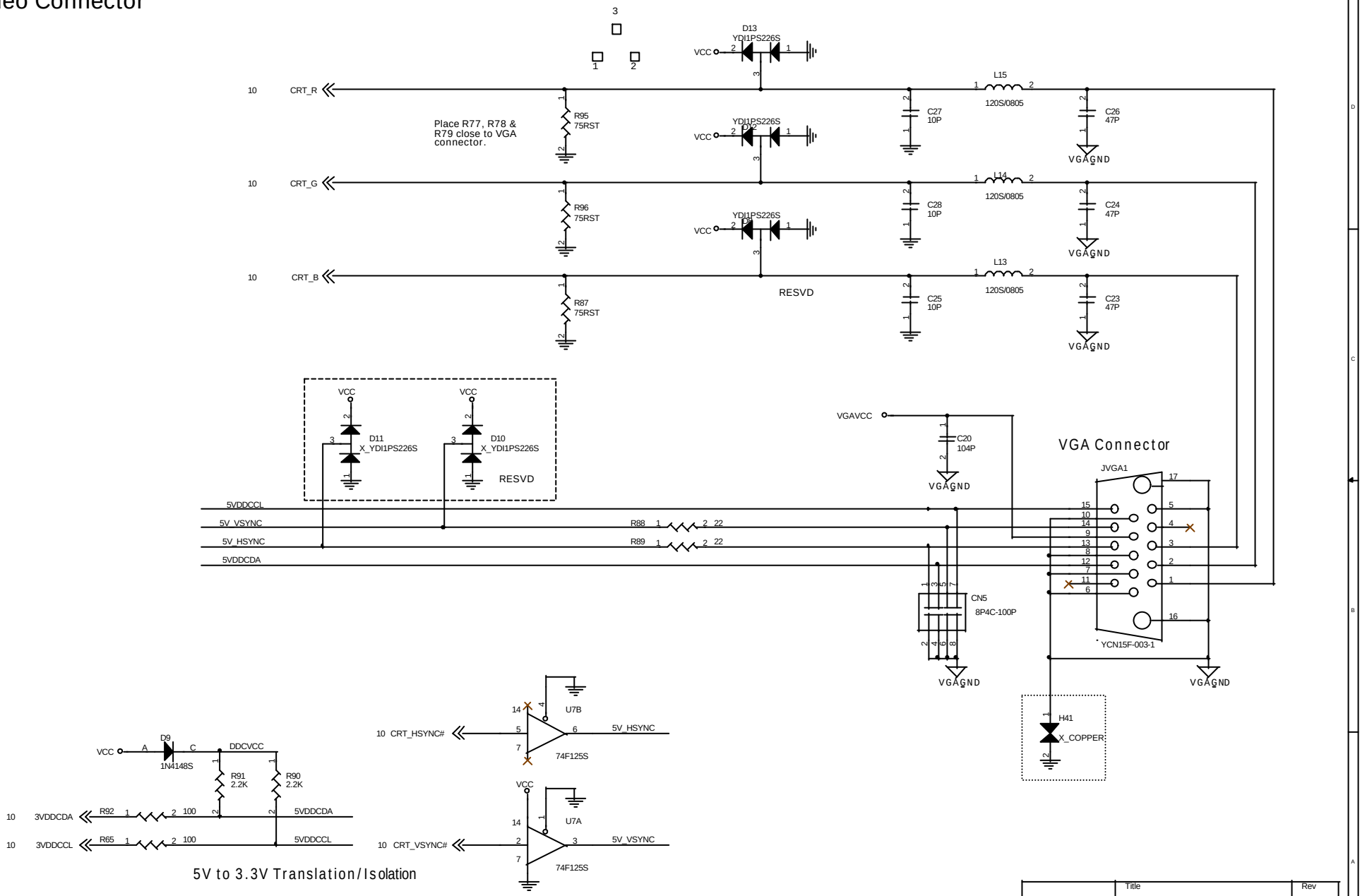

5V to 3.3V Translation/Isolation

Micro-Star	Title: MS-6315		Rev: 20A
Document Number: Video Connector			
Last Revision Date: Friday, September 22, 2000		Sheet 12 of 34	

DIMM1

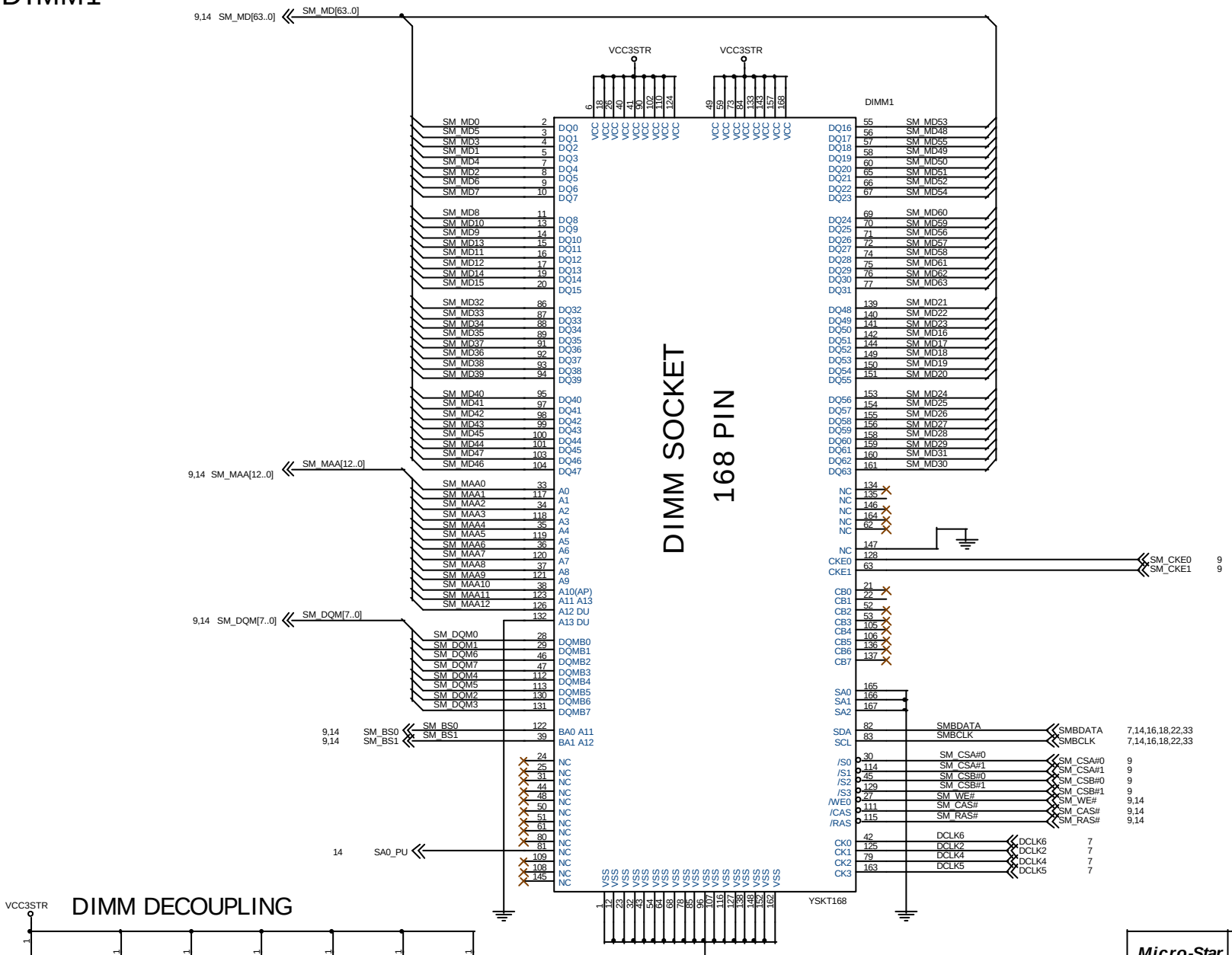

DIMM DECOUPLING

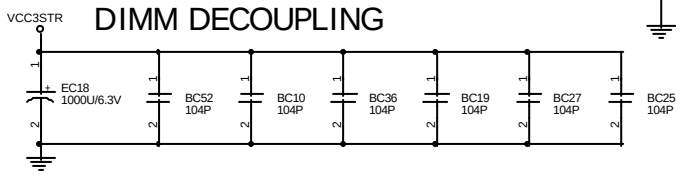

Micro-Star	Title: MS-6315	Rev: 20A
Document Number: System Memory: DIMM1		
Last Revision Date: Friday, September 22, 2000	Sheet 13 of 34	

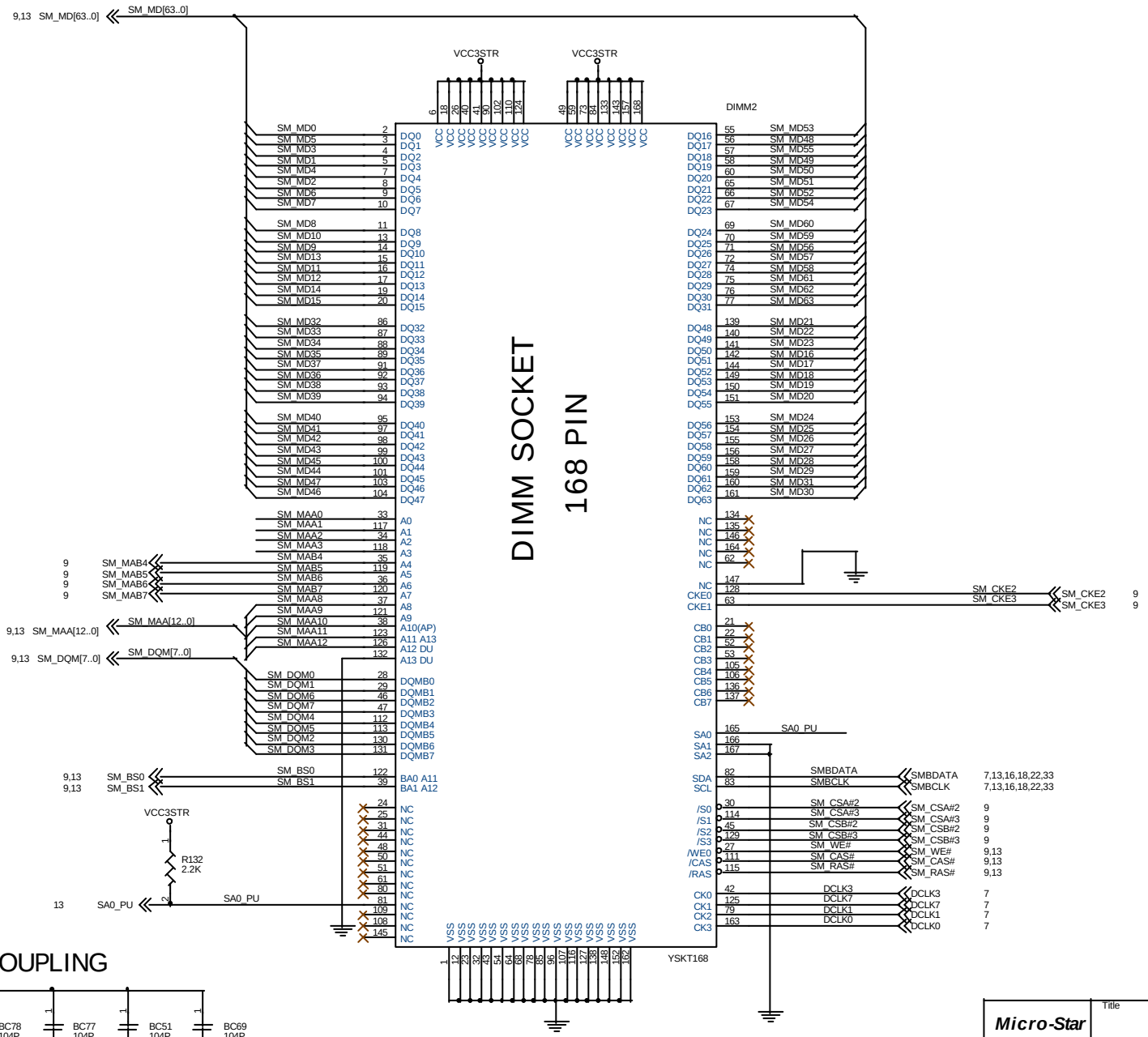

DIMM DECOUPLING

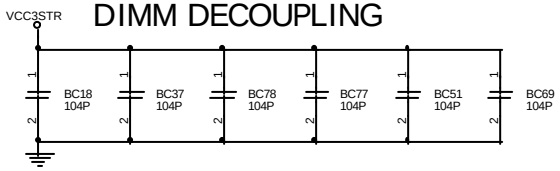

Micro-Star	Title: MS-6315	Rev: 20A
Document Number: System Memory: DIMM2		
Last Revision Date: Friday, September 22, 2000	Sheet 14 of 34	

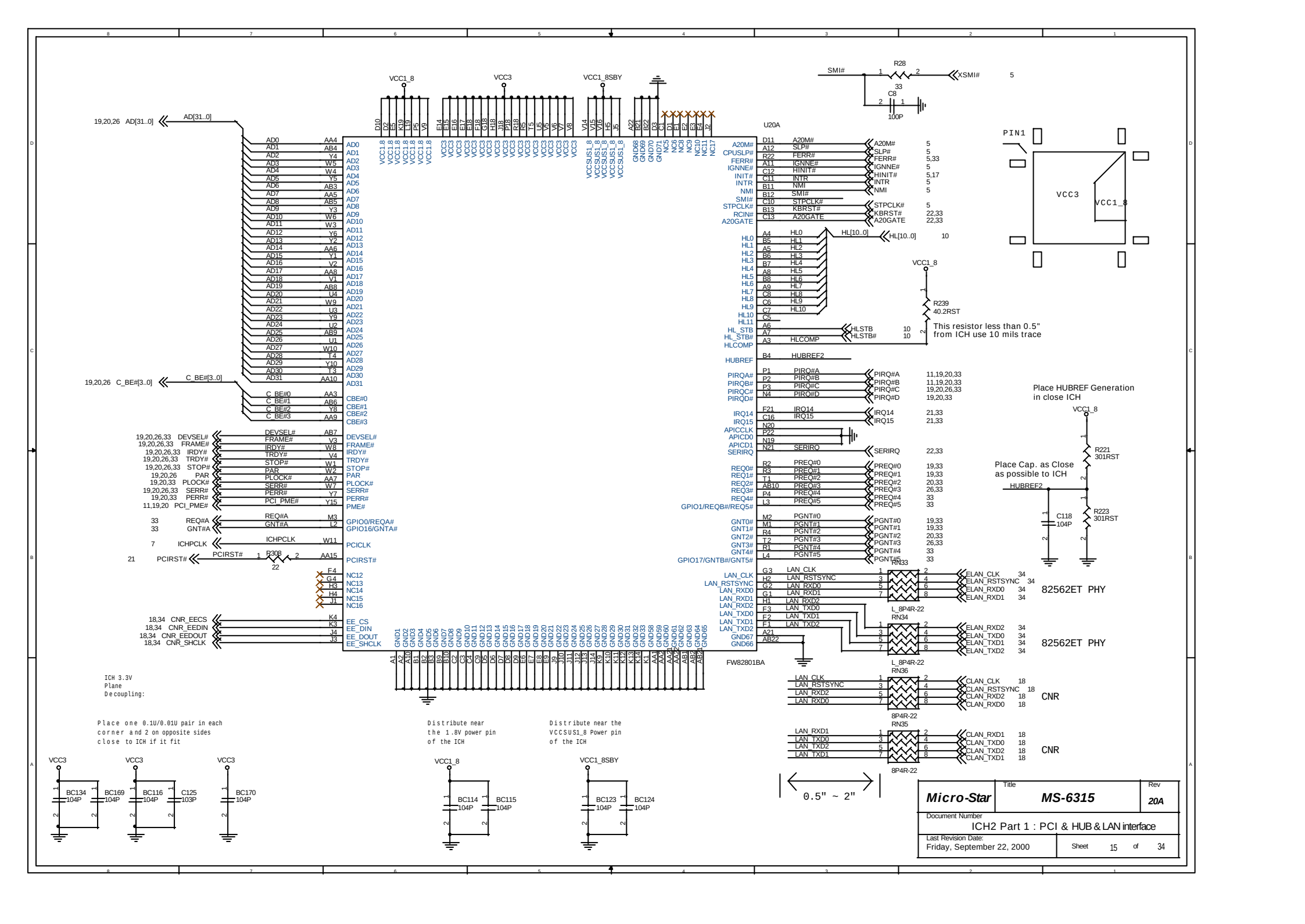
VCC1_8
VCC3
VCC1_8SBY
SMI#
R28
33
XSMI#
C8
100P
PIN1
U20A
FW82801BA
AD[31..0]
C_BE#[3..0]
HL[10..0]
R239
40.2RST
This resistor less than 0.5" from ICH use 10 mils trace
Place HUBREF Generation in close ICH
Place Cap. as Close as possible to ICH
R221
301RST
R223
301RST
C118
104P
HUBREF2
82562ET PHY
82562ET PHY
CNR
CNR
RN33
RN34
RN35
RN36
L_8P4R-22
8P4R-22
0.5" ~ 2"
ICH 3.3V Plane Decoupling:
Place one 0.1U/0.01U pair in each corner and 2 on opposite sides close to ICH if it fit
Distribute near the 1.8V power pin of the ICH
Distribute near the VCCSUS1_8 Power pin of the ICH
BC134 104P
BC169 104P
BC116 104P
C125 103P
BC170 104P
BC114 104P
BC115 104P
BC123 104P
BC124 104P
Micro-Star
Title
MS-6315
Rev
20A
Document Number
ICH2 Part 1 : PCI & HUB & LAN interface
Last Revision Date:
Friday, September 22, 2000
Sheet 15 of 34

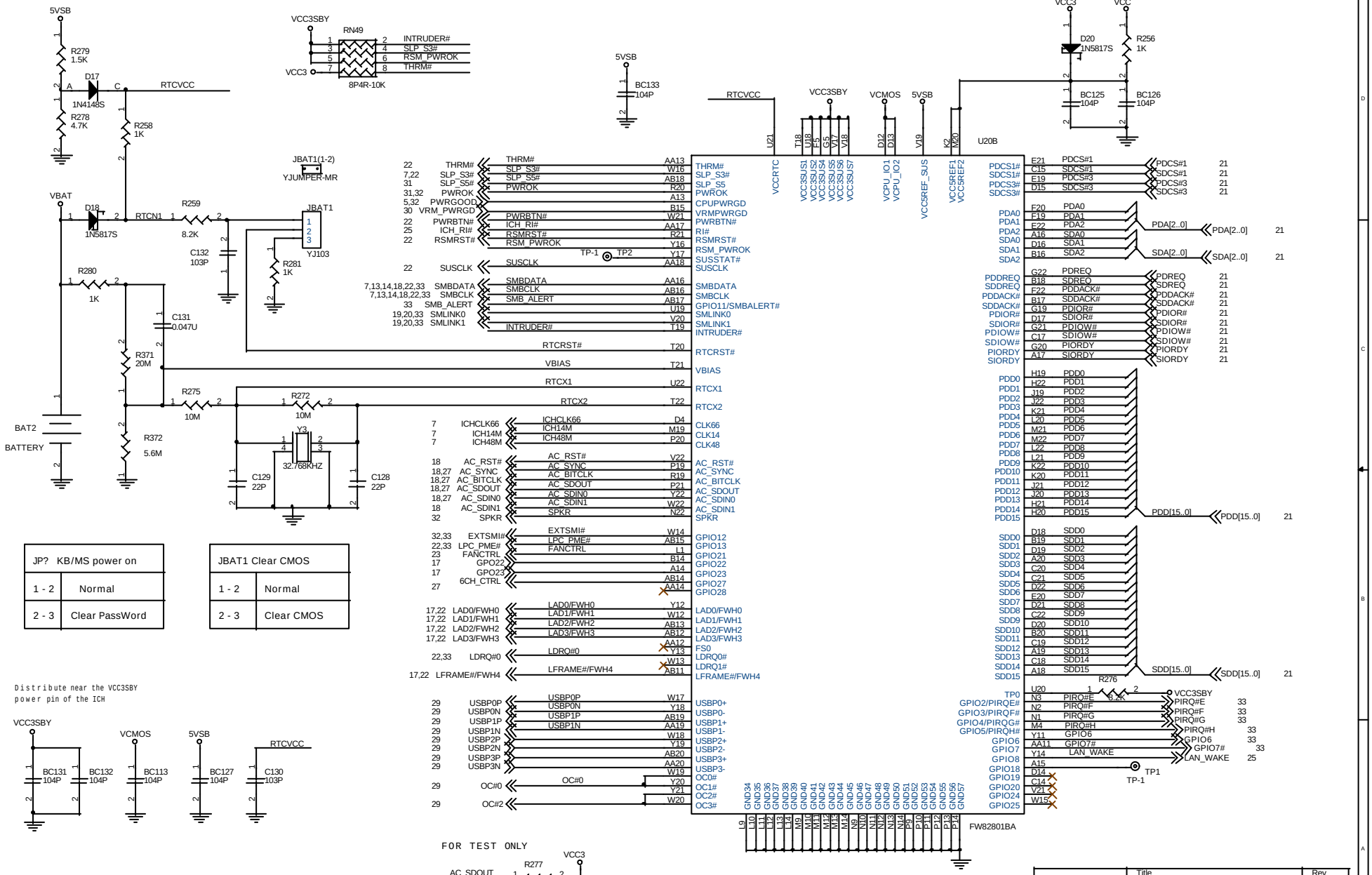
5VSB
R279 1.5K
D17 1N4148S
R278 4.7K
RTCVCC
R258 1K
VBAT
D18 1N5817S
RTCN1
R259 8.2K
C132 103P
JBAT1(1-2)
YJUMPER-MR
JBAT1
YJ103
R281 1K
R280 1K
C131 0.047U
R371 20M
R275 10M
R272 10M
R372 5.6M
BAT2
BATTERY
Y3 32.768KHZ
C129 22P
C128 22P
VCC3SBY
RN49
8P4R-10K
INTRUDER#
SLP_S3#
RSM_PWROK
THRM#
VCC3
BC133 104P
U20B
FW82801BA
D20 1N5817S
R256 1K
BC125 104P
BC126 104P
JP? KB/MS power on
1 - 2 Normal
2 - 3 Clear PassWord
JBAT1 Clear CMOS
1 - 2 Normal
2 - 3 Clear CMOS
Distribute near the VCC3SBY power pin of the ICH
BC131 104P
BC132 104P
BC113 104P
BC127 104P
C130 103P
VCMOS
RTCVCC
FOR TEST ONLY
AC_SDOUT
R277 X_1K
SPKR
R312 X_1K
R276 8.2K
TP-1
TP1
Micro-Star
MS-6315
20A
ICH2 Part 2 : RTC & IDE & AC97 & USB interface
Friday, September 22, 2000
Sheet 16 of 34

Firware Hub (FWH)

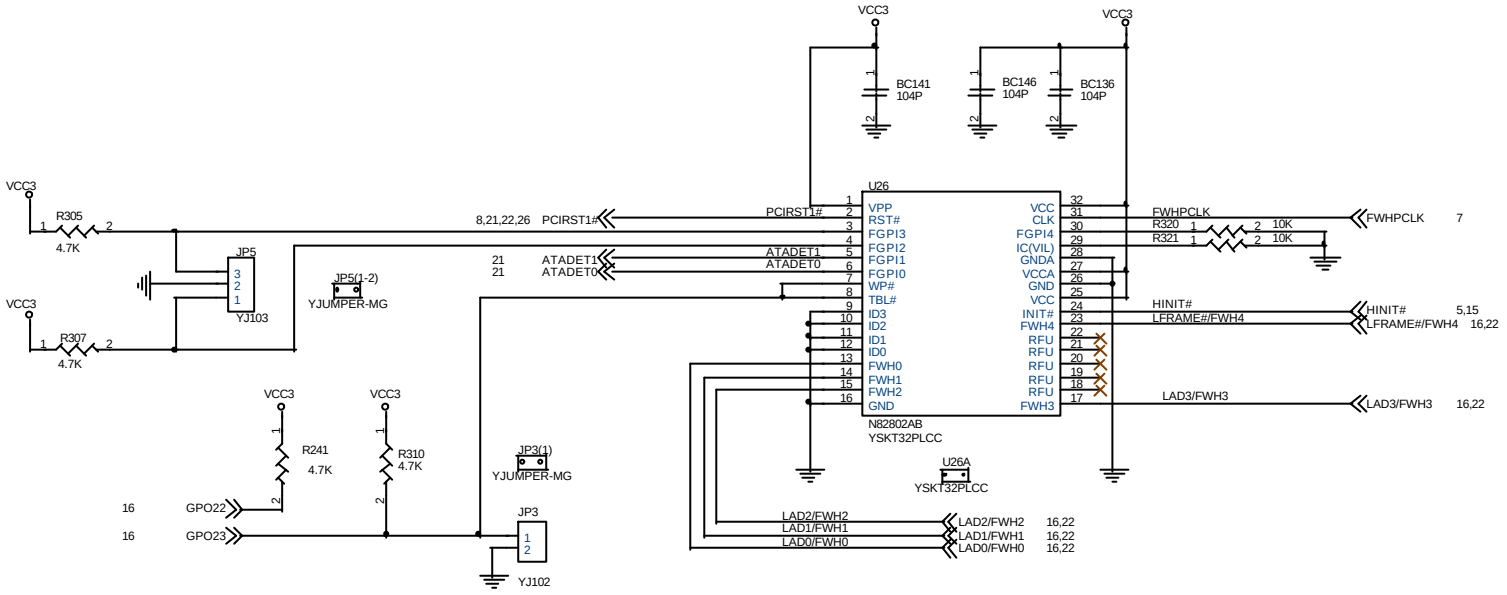

JP5 BIOS Update Configuration	
1 - 2	Normal Mode
2 - 3	Boot auto clear CMOS
OPEN	Flash from FDD

*

JP3 BIOS Update	
SHORT	Locked
OPEN	Unlocked

Micro-Star	Title: MS-6315	Rev: 20A
Document Number: Firware HUB (FWH)		
Last Revision Date: Friday, September 22, 2000	Sheet 17 of 34	

CNR RISER

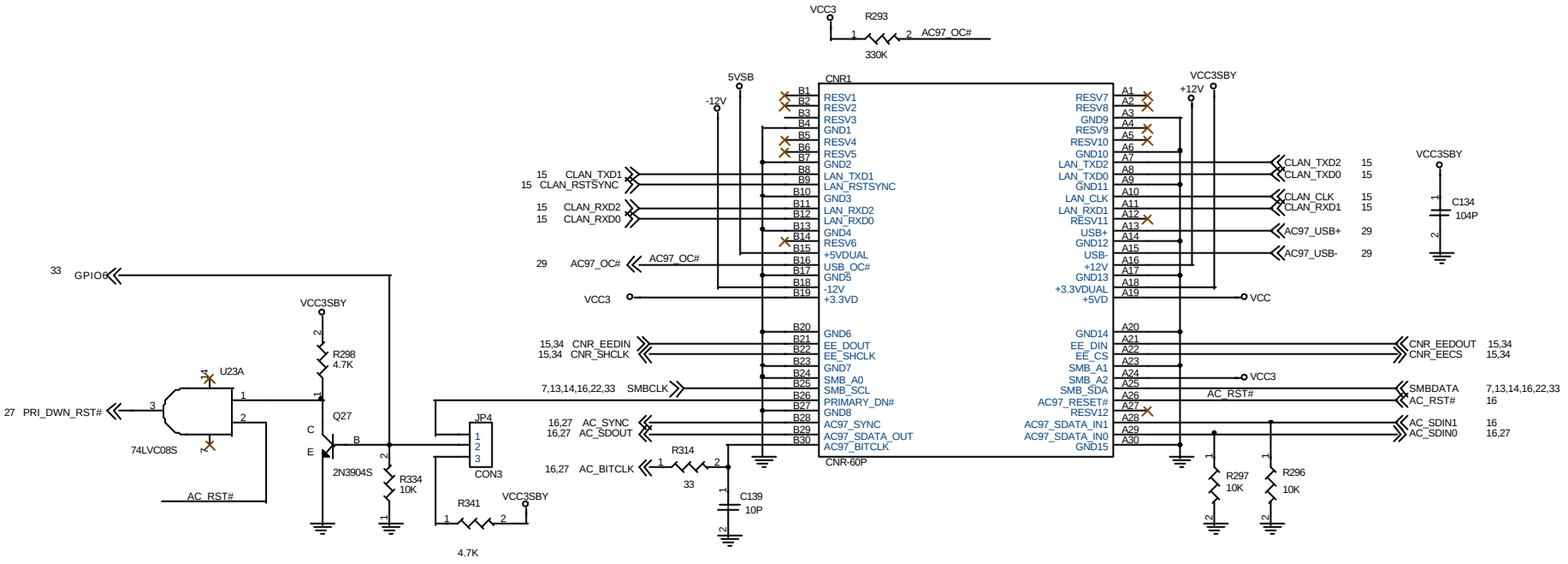

JP4	AUDIO DOWN
1 - 2	Auto mode
2 - 3	Primary audio codec onboard

Micro-Star	Title: MS-6315	Rev: 20A
Document Number: CNR Slot		
Last Revision Date: Wednesday, October 11, 2000	Sheet 18 of 34	

PCI Connectors

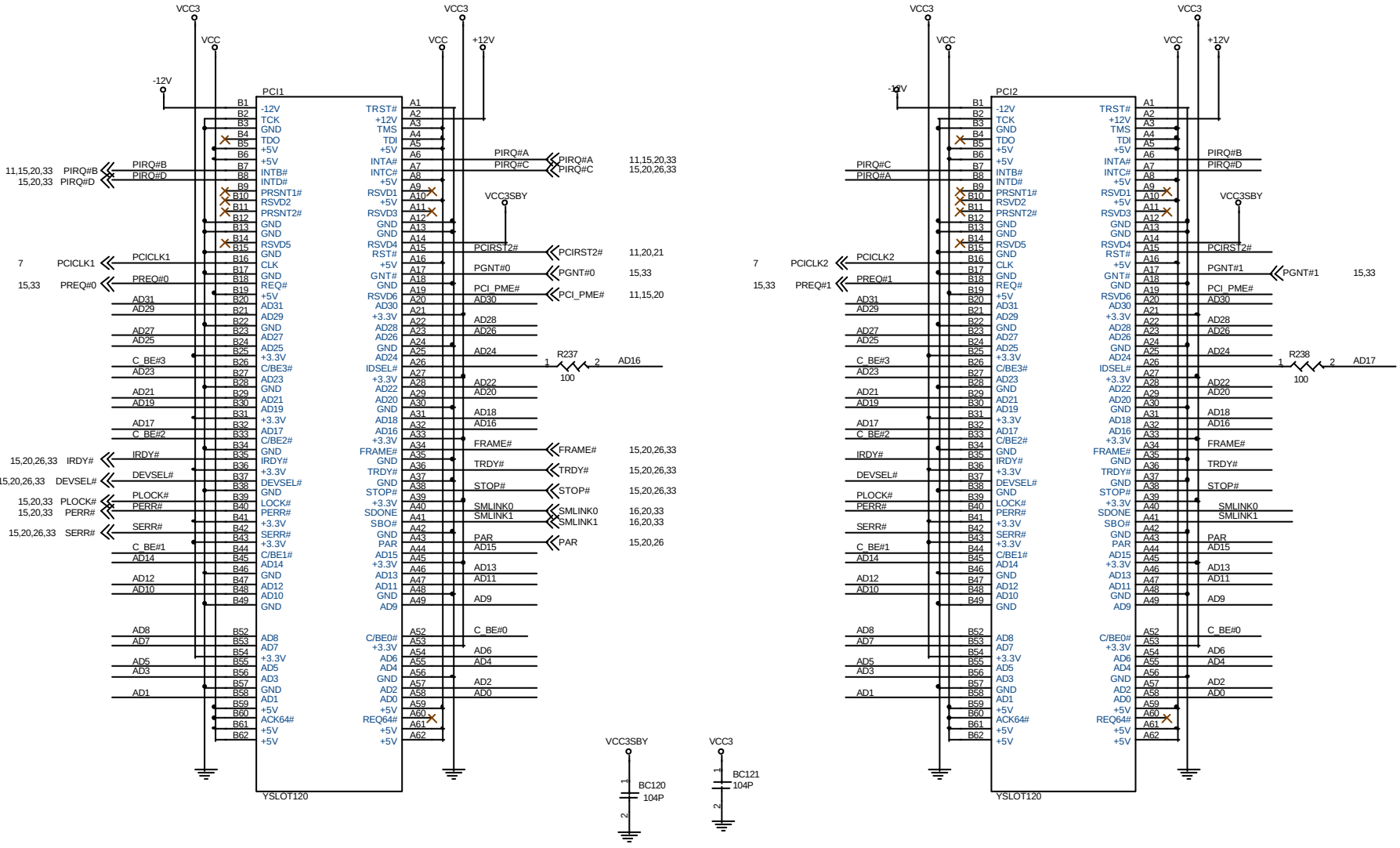

15,20,26 AD[31..0] ← AD[31..0]

15,20,26 C_BE#[3..0] ← C_BE#[3..0]

Micro-Star	Title: MS-6315	Rev: 20A
Document Number: PCI Slot 1 & 2		
Last Revision Date: Friday, September 22, 2000	Sheet 19 of 34	

PCI Slot

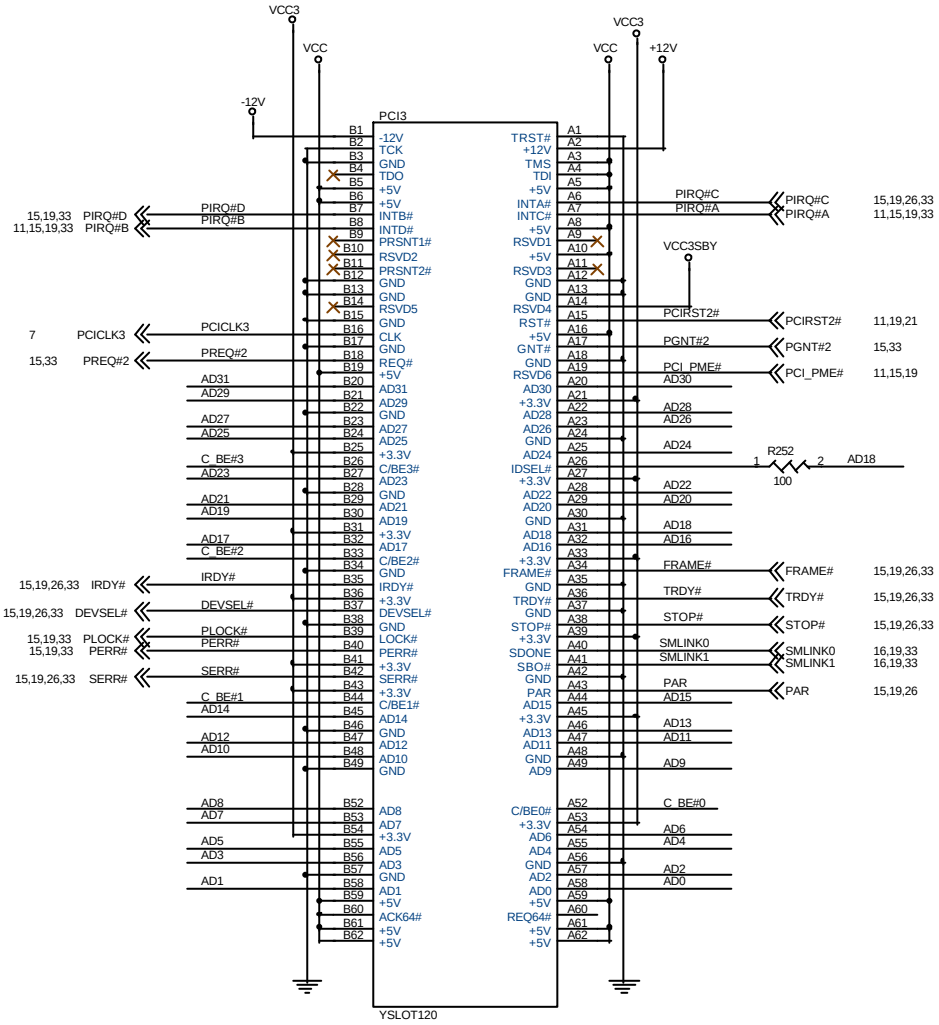

15,19,26 AD[31..0] AD[31..0]

15,19,26 C_BE#[3..0] C_BE#[3..0]

Micro-Star	Title: MS-6315	Rev: 20A
Document Number: PCI Slot 3		
Last Revision Date: Friday, September 22, 2000	Sheet 20 of 34	

ATA66 IDE CONNECTORS

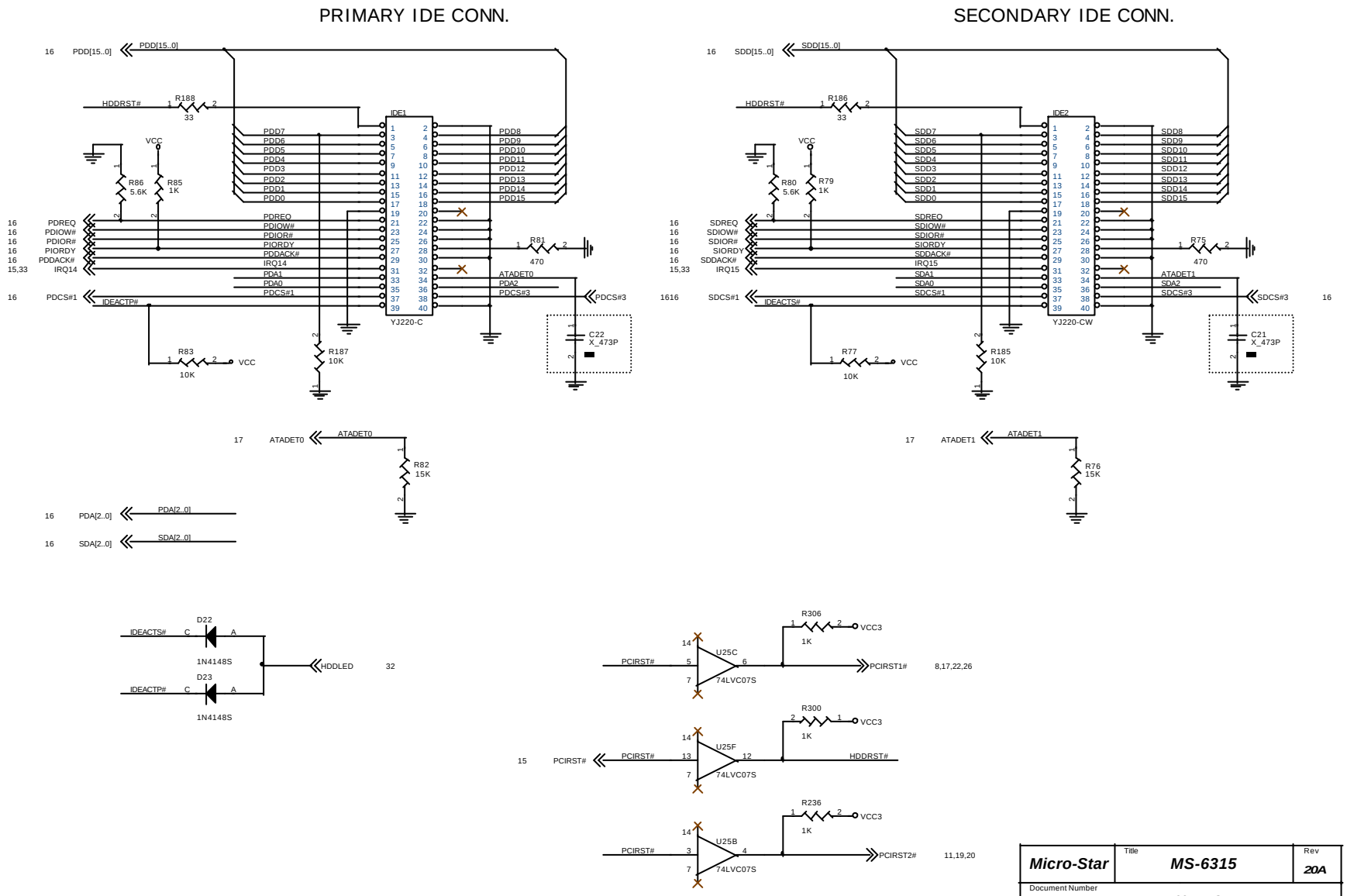

Micro-Star	Title: MS-6315		Rev: 20A
Document Number: ATA 100 IDE Connector			
Last Revision Date: Friday, September 22,2000		Sheet 21 of 34	

Super I/O

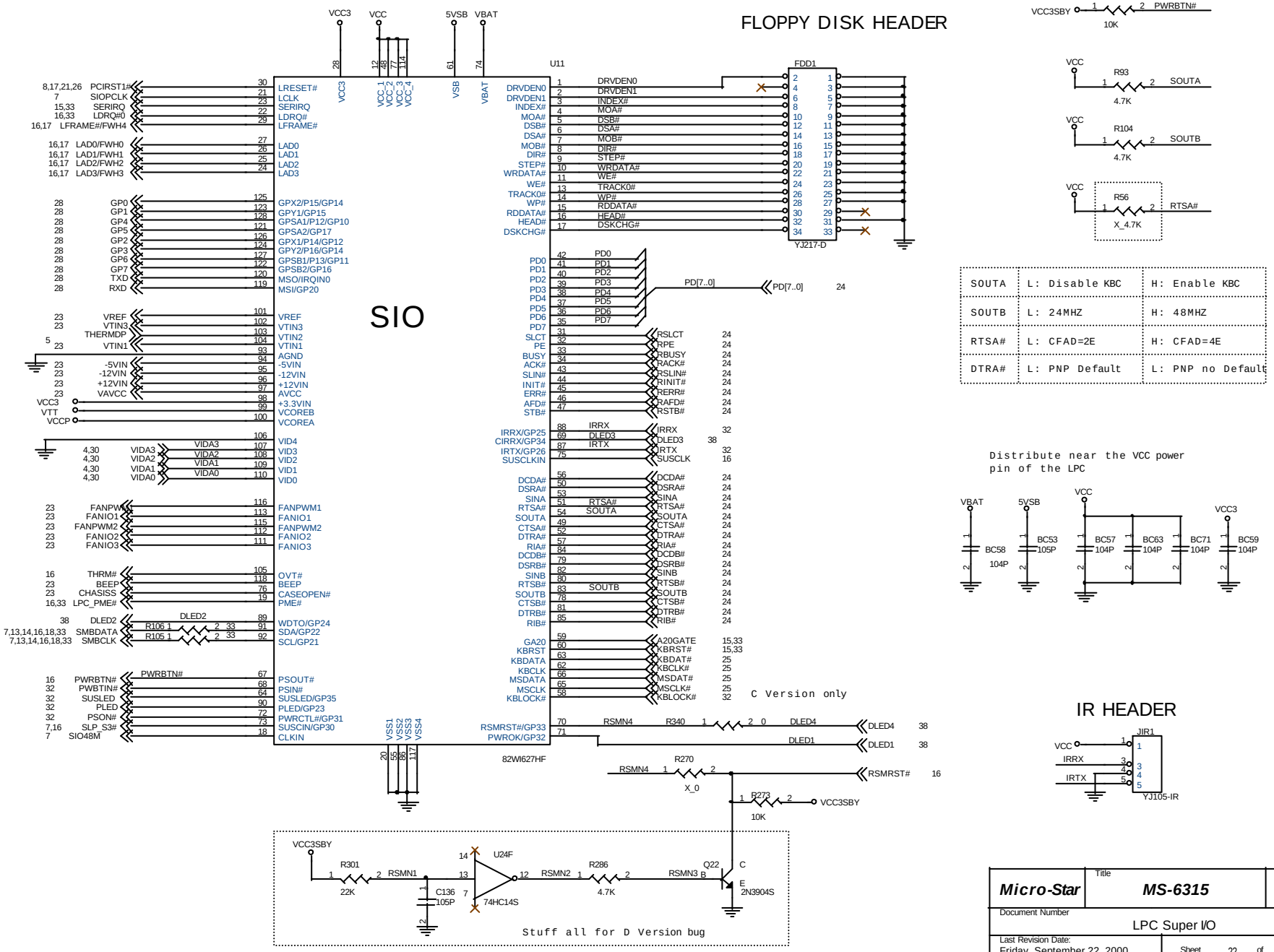

Micro-Star	Title: MS-6315	Rev: 20A
Document Number: LPC Super I/O		
Last Revision Date: Friday, September 22, 2000	Sheet 22 of 34	

Hardware Monitor

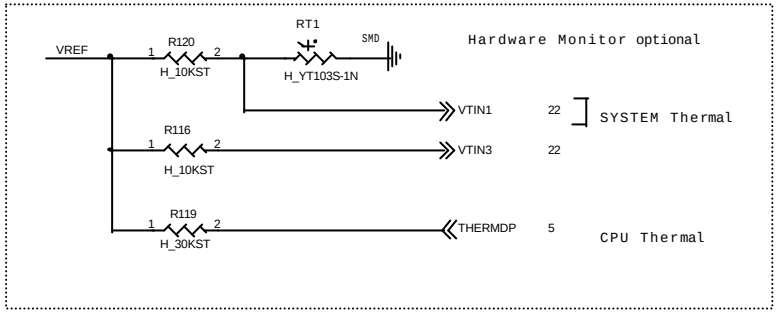

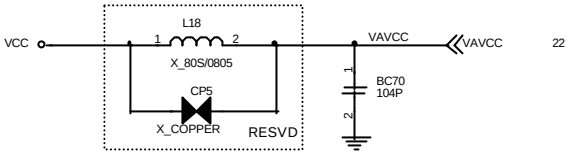

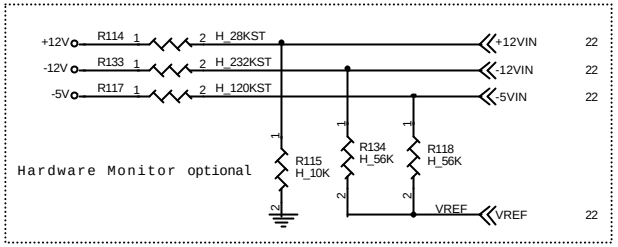

Chasiss Intrusion Header

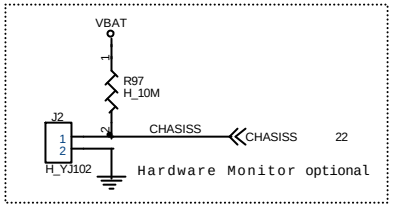

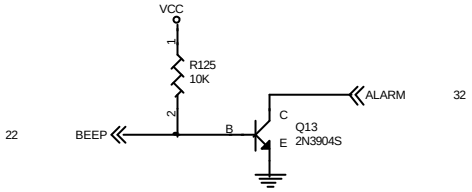

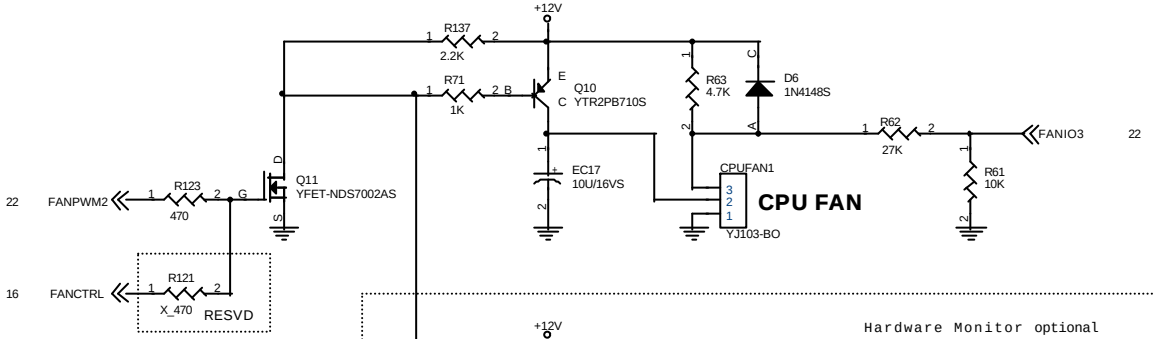

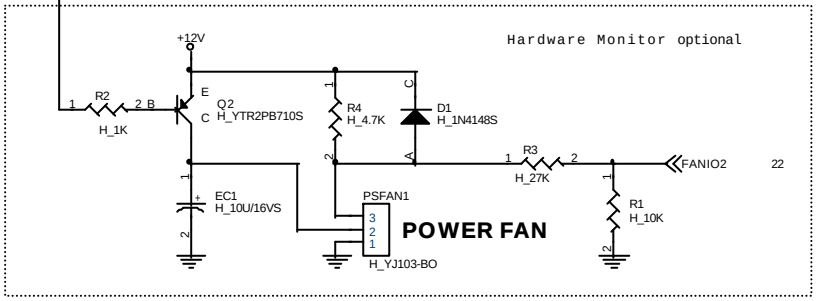

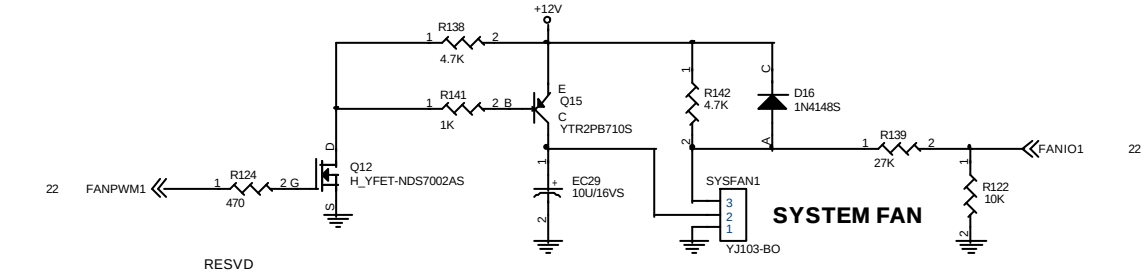

Micro-Star	Title: MS-6315	Rev: 20A
Document Number: Hardware Monitor		
Last Revision Date: Friday, September 22, 2000	Sheet 23 of 34	

Parallel Port / COM1port & COM2 Header

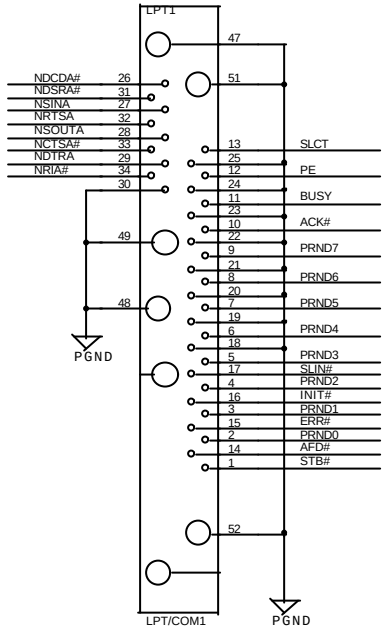

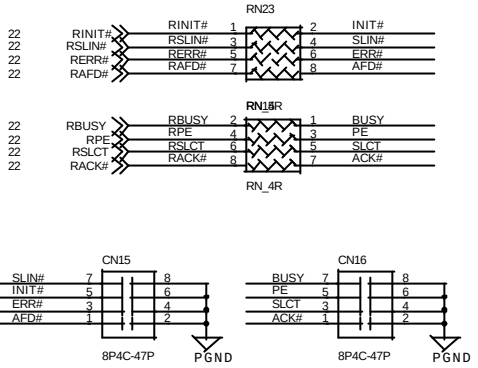

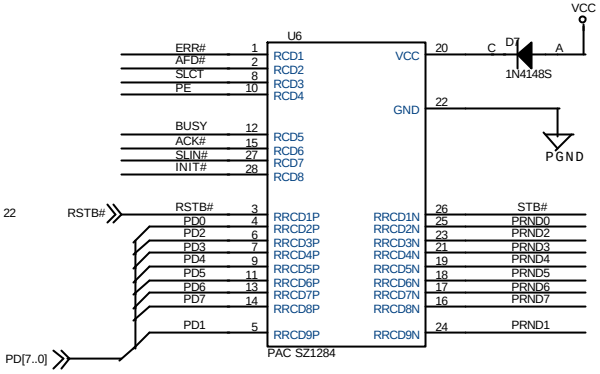

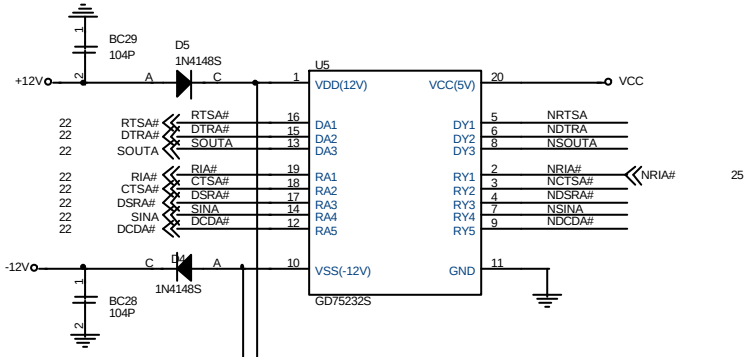

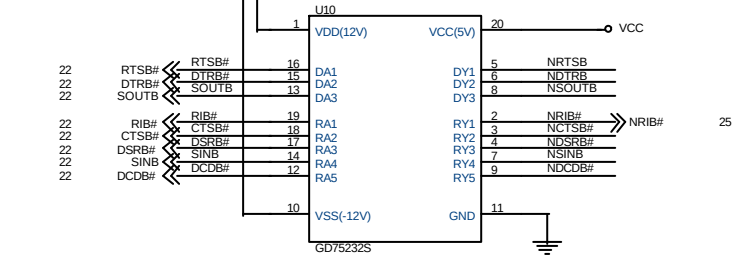

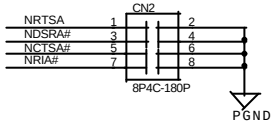

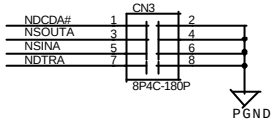

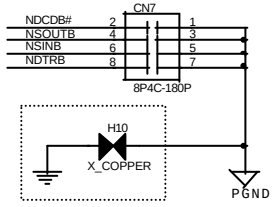

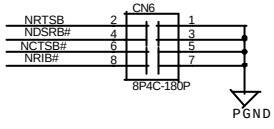

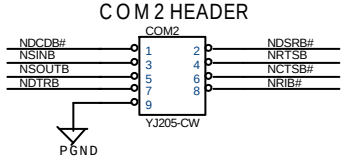

Micro-Star	Title: MS-6315	Rev: 20A
Document Number: Parallel Port Header		
Last Revision Date: Friday, September 22, 2000	Sheet 24 of 34	

KEYBOARD/MOUSE PORTS

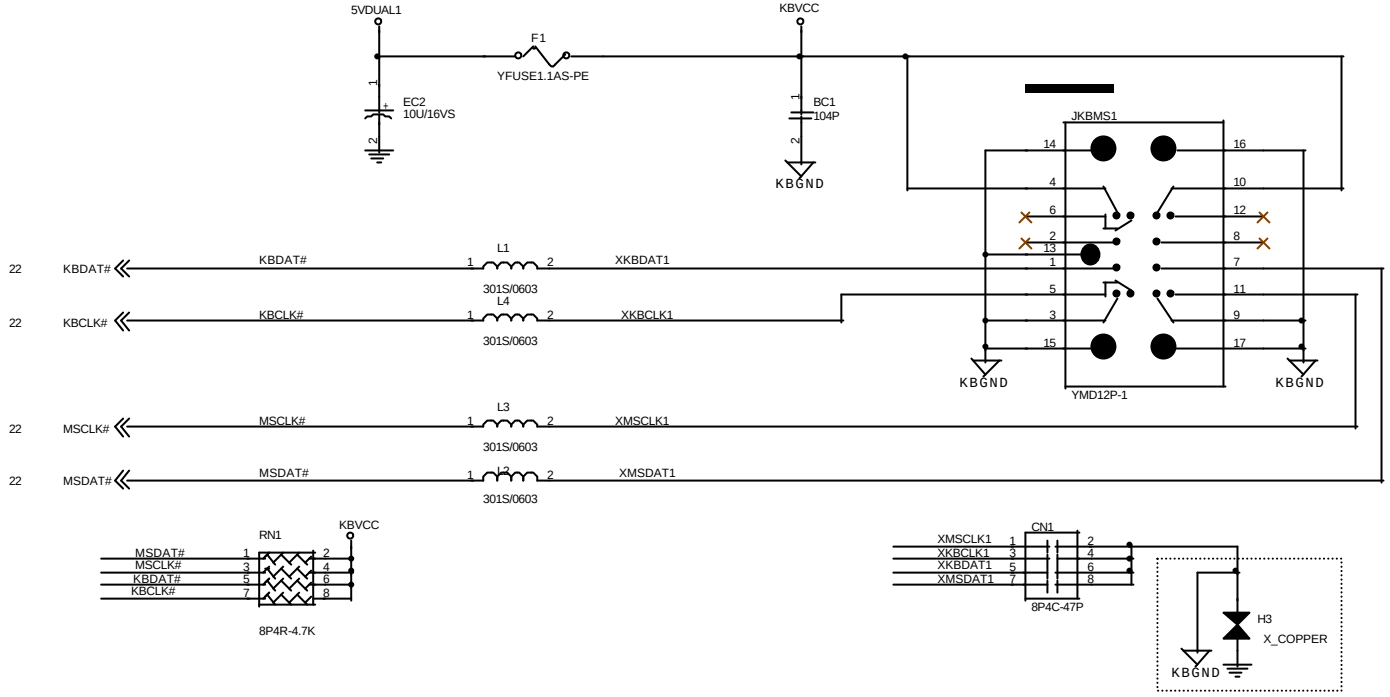

LAN WAKEUP HEADER

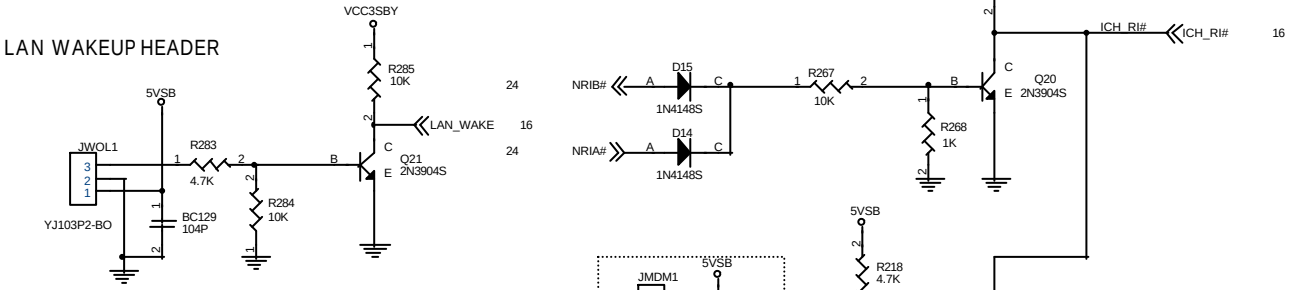

INTERNAL MODEM WAKEUP HEADER

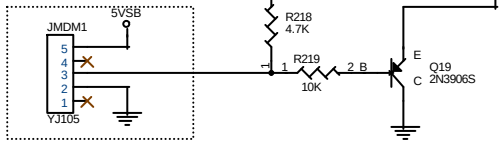

Micro-Star	Title: MS6315	Rev: 20A
	Document Number: Keyboard board / Mouse port	
Last Revision Date: Friday, September 22, 2000	Sheet 25 of 34	

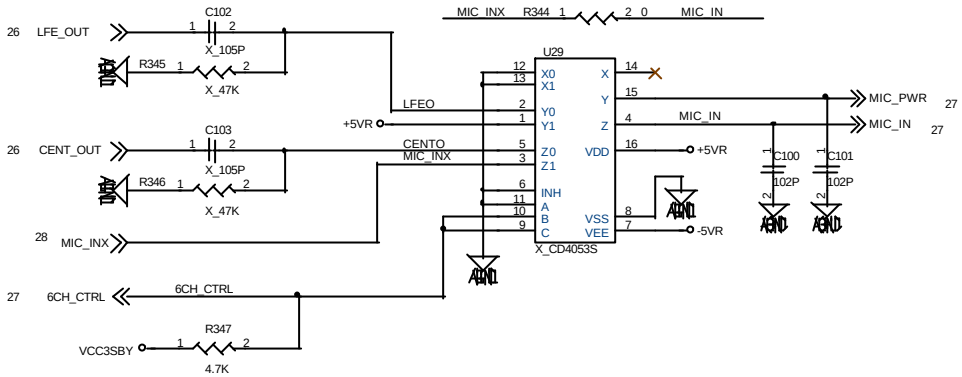

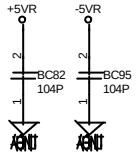

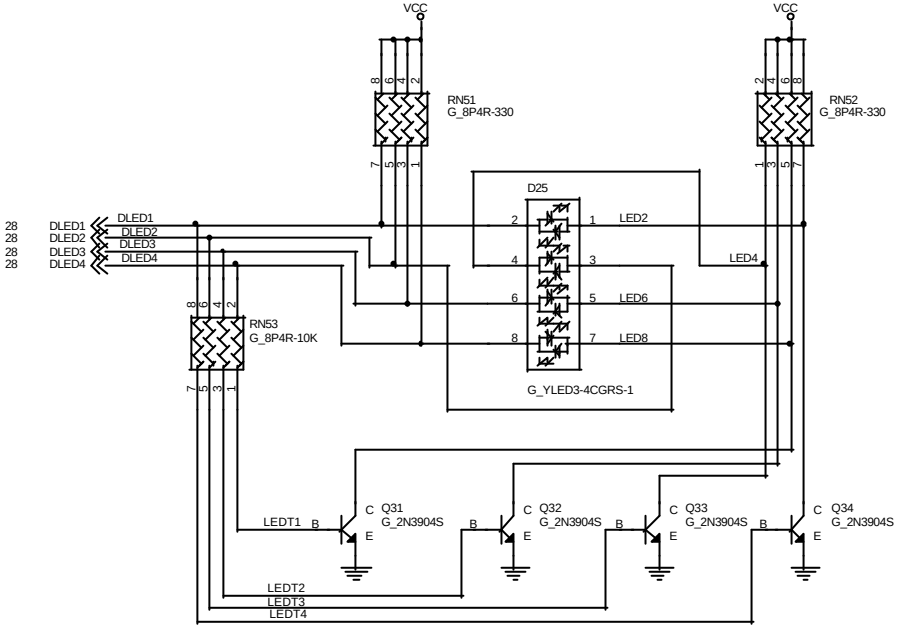

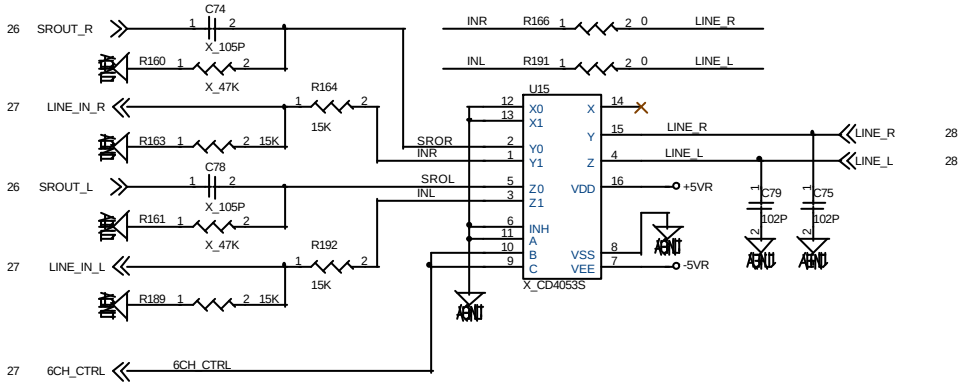

Micro-Star	Title: MS6315	Rev: 20A
	Document Number: PCI Hardware Audio	
Last Revision Date: Friday, September 22, 2000	Sheet 26 of 34	

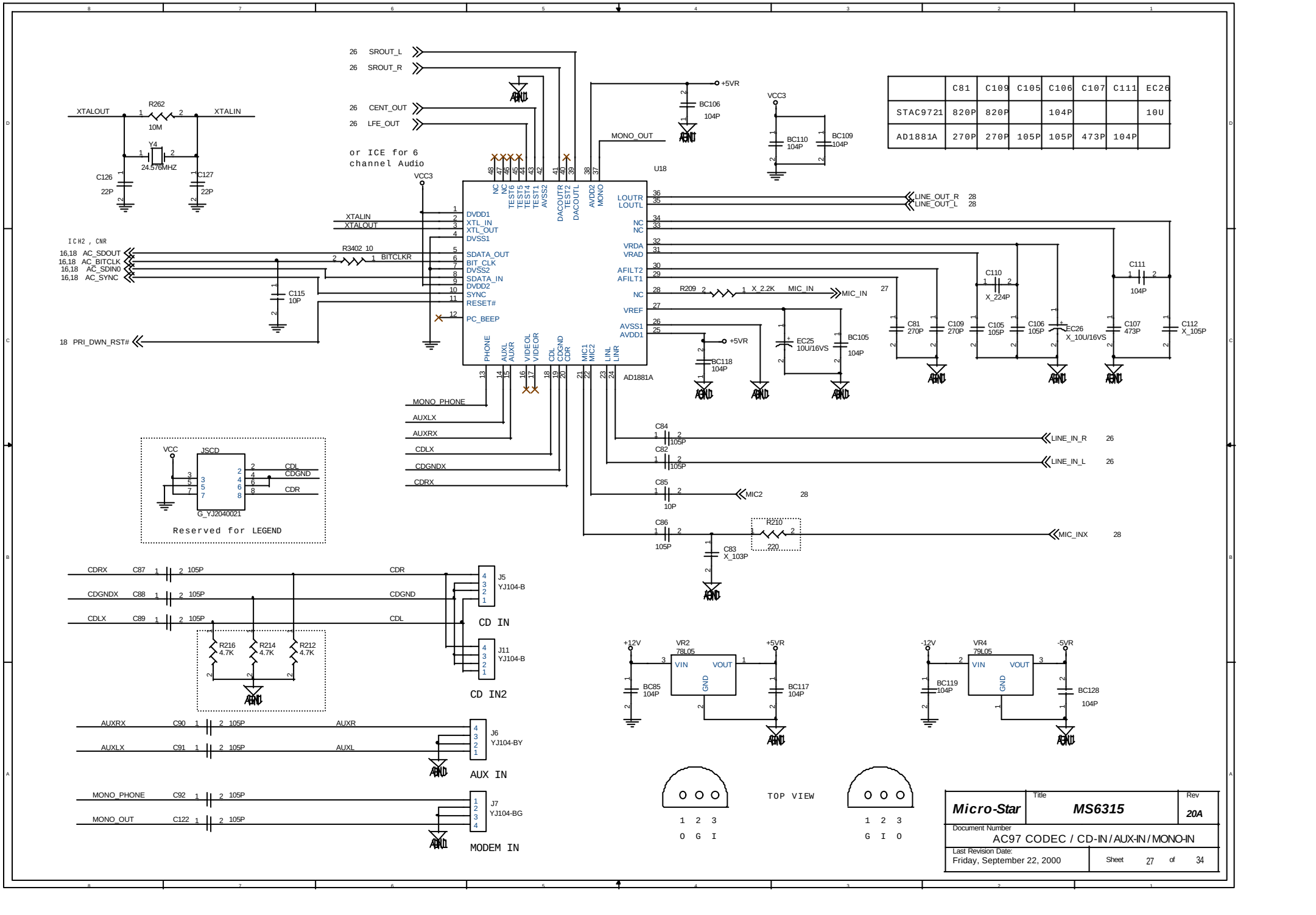

	C81	C109	C105	C106	C107	C111	EC26
STAC9721	820P	820P		104P			10U
AD1881A	270P	270P	105P	105P	473P	104P	

Micro-Star	Title: MS6315		Rev: 20A
	Document Number: AC97 CODEC / CD-IN / AUX-IN / MONO-IN		
	Last Revision Date: Friday, September 22, 2000	Sheet 27 of 34	

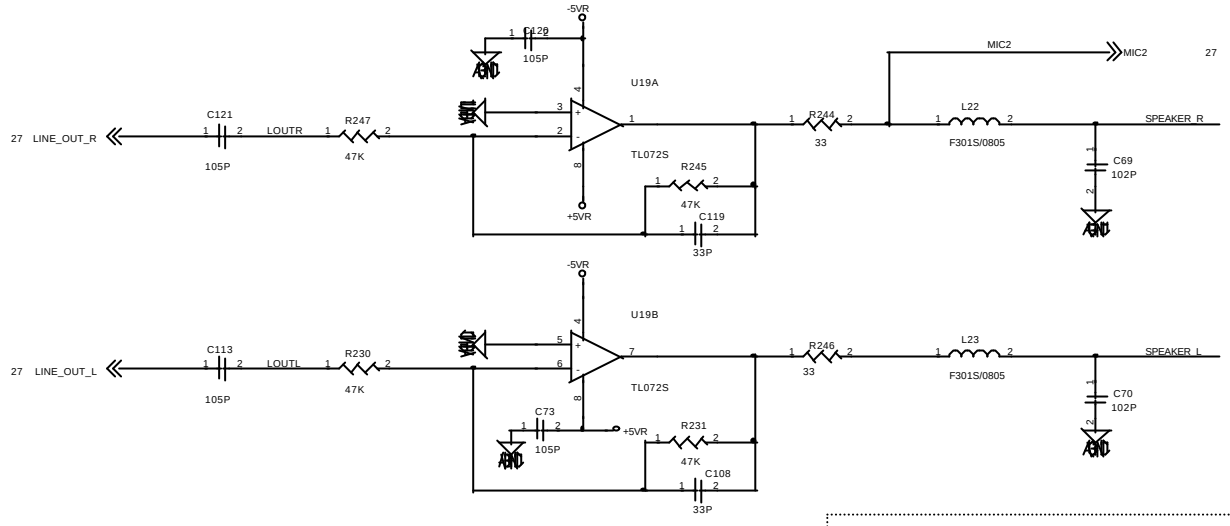

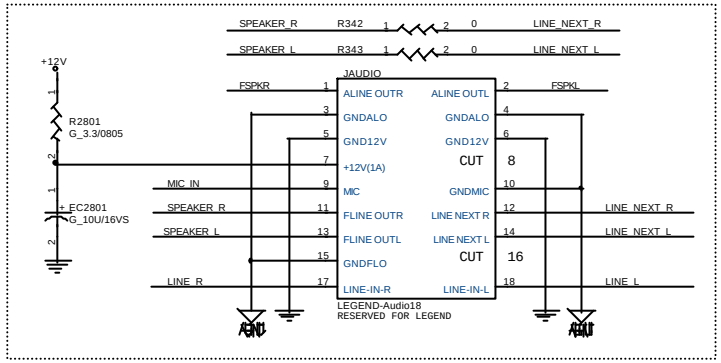

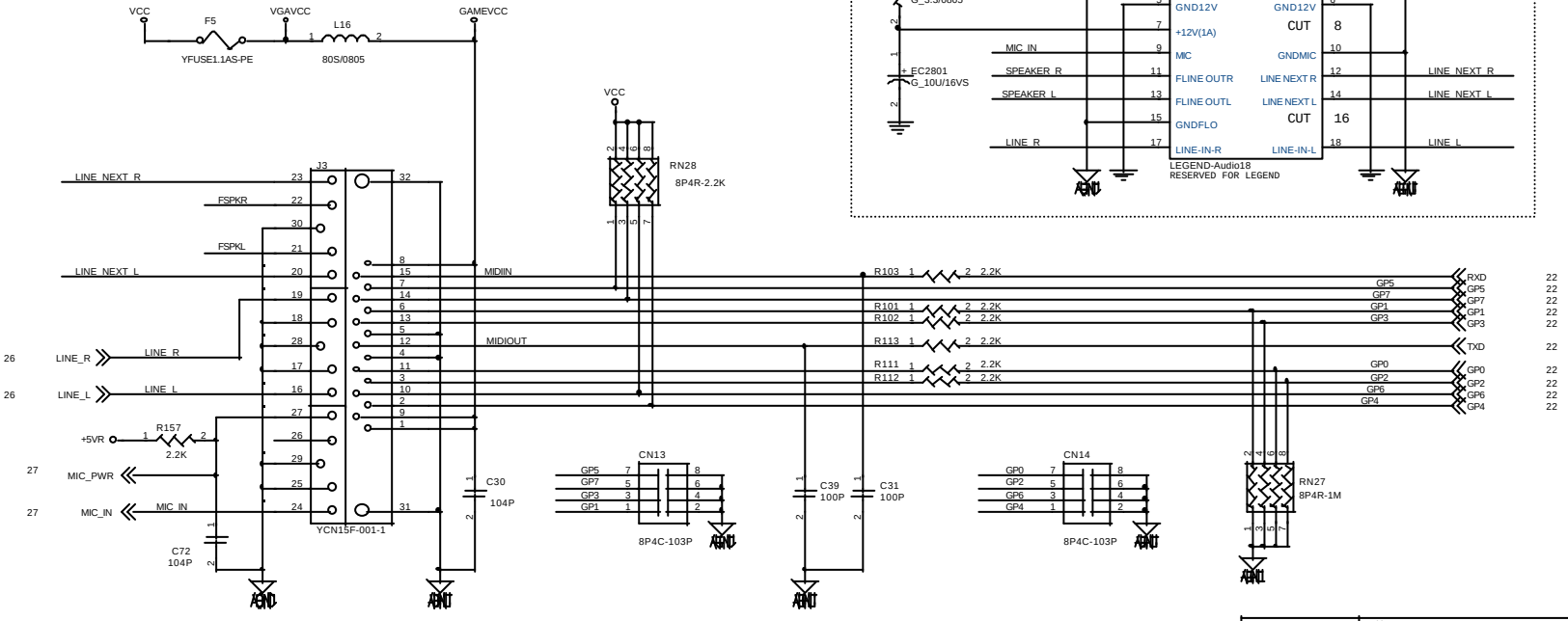

GAME PORT HEADER

Micro-Star	Title: MS6315		Rev: 20A
Document Number: Audio Amplifier & Game port Connector			
Last Revision Date: Friday, September 22,2000		Sheet 28 of 34	

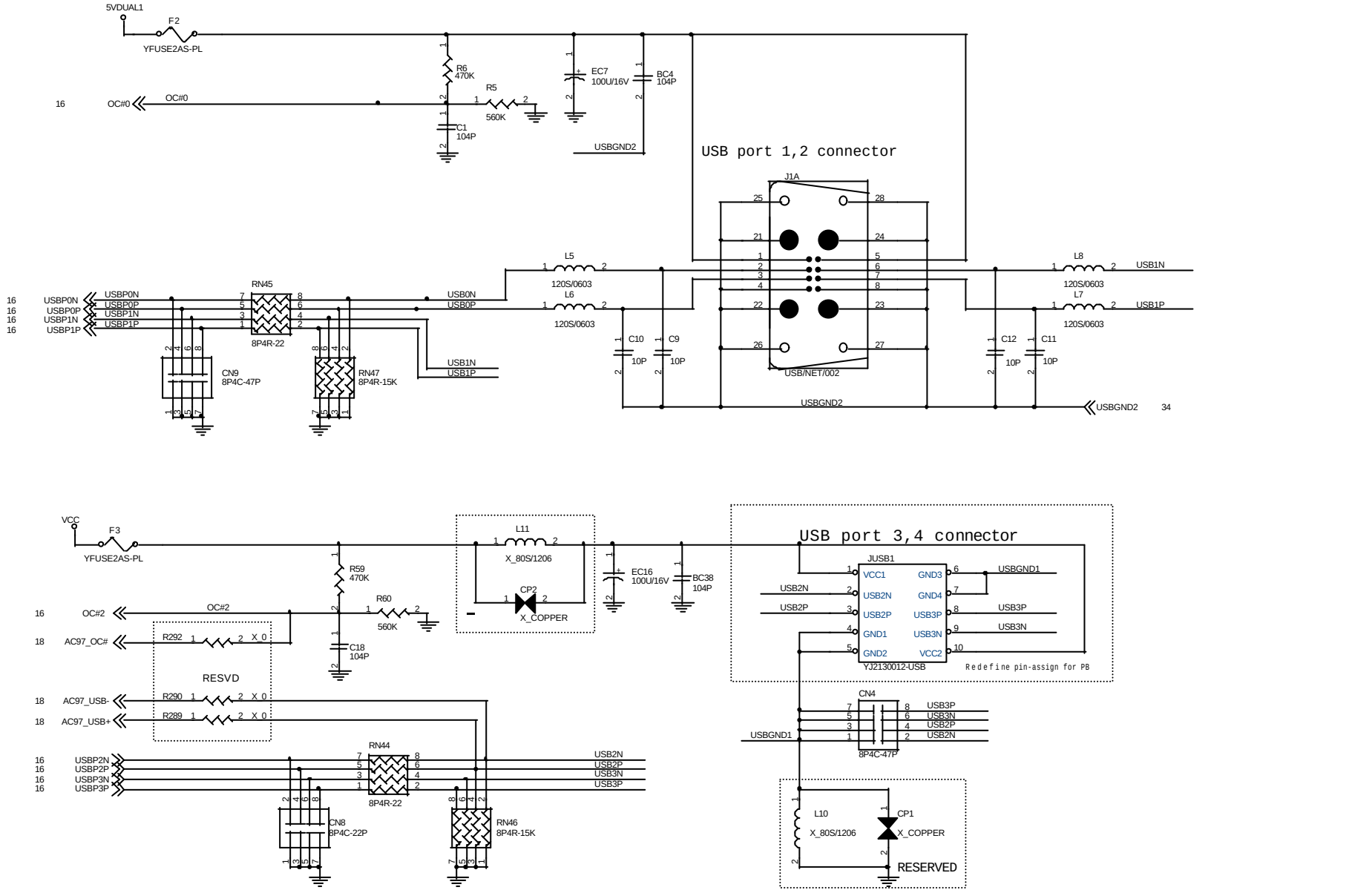

Micro-Star	Title: MS6315	Rev: 20A
Document Number: USB Connector		
Last Revision Date: Friday, September 22, 2000	Sheet 29 of 34	

VRM 8.4

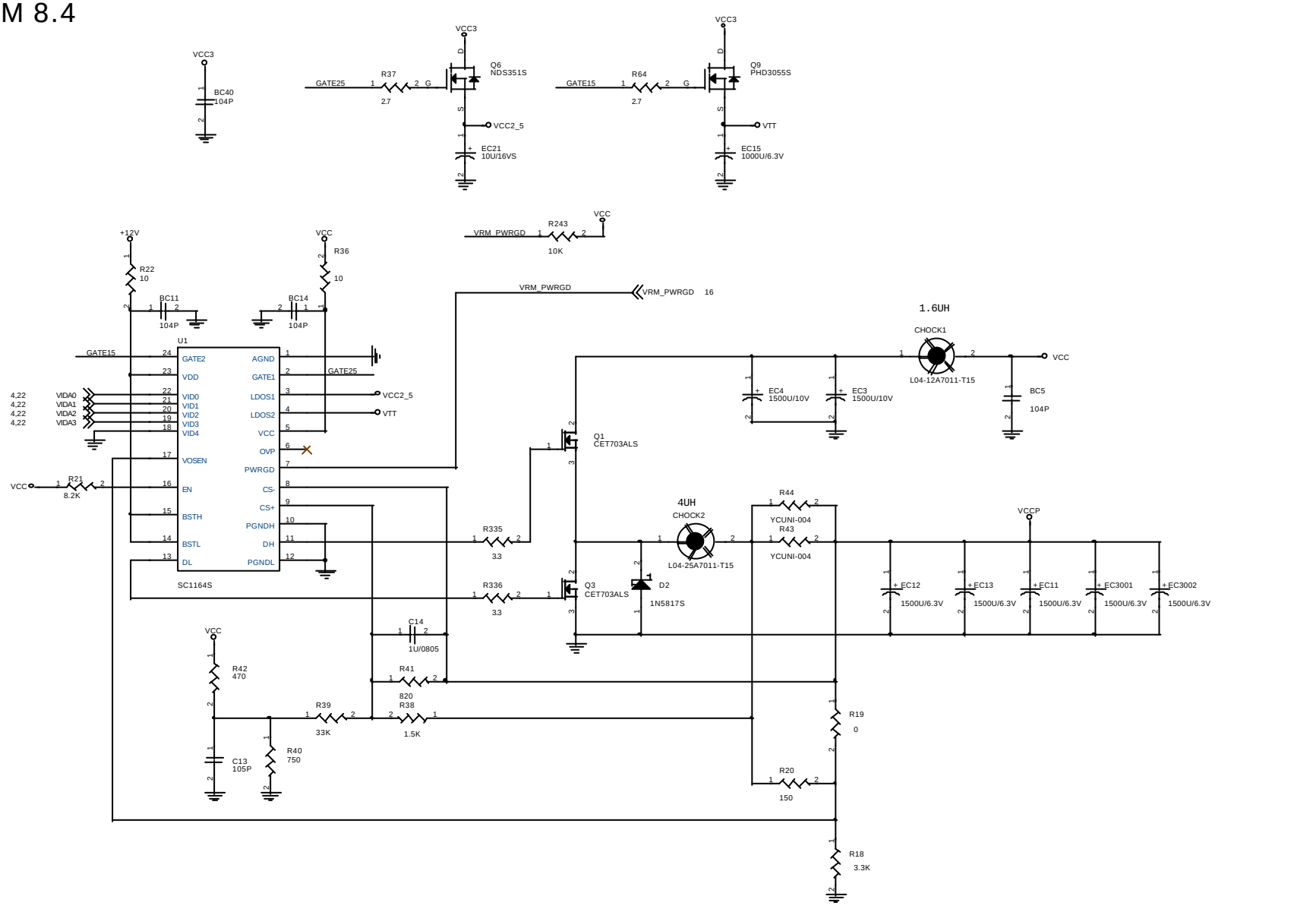

Micro-Star	Title: MS6315	Rev: 20A
Document Number: VRM 8.4 (SC1164) / VCCP , VCC2_5 , VTT		
Last Revision Date: Friday, September 22,2000	Sheet 30 of 34	

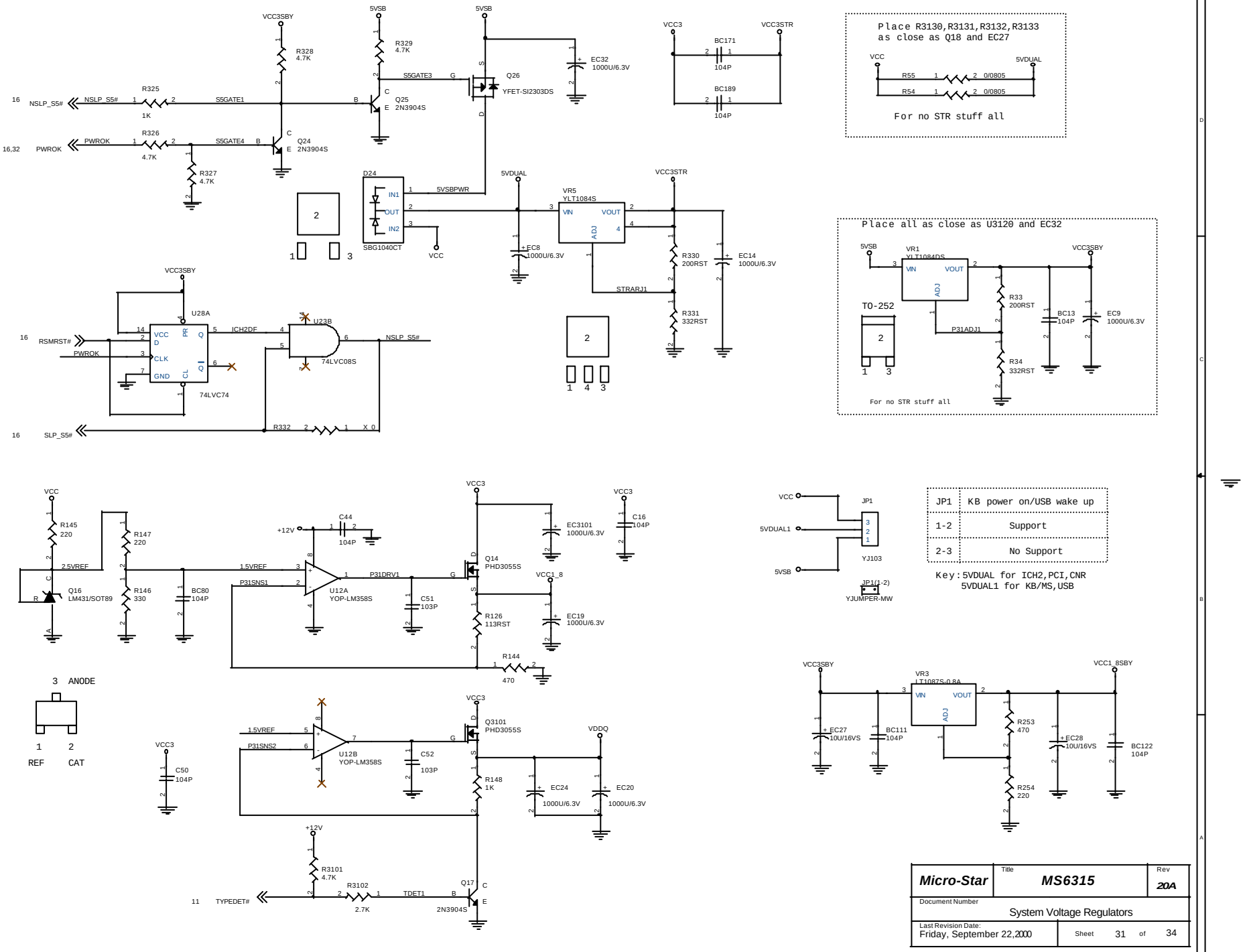
VCC3SBY
5VSB
5VSB
R328 4.7K
R329 4.7K
S5GATE3
Q26 YFET-SI2303DS
EC32 1000U/6.3V
VCC3
VCC3STR
BC171 104P
BC189 104P
16 NSLP_S5#
R325 1K
S5GATE1
Q25 E 2N3904S
16,32 PWROK
R326 4.7K
S5GATE4
Q24 E 2N3904S
R327 4.7K
D24 SBG1040CT
IN1
OUT
IN2
5VSBPWR
VCC
5VDUAL
VR5 YLT1084S
VIN
VOUT
ADJ
EC8 1000U/6.3V
VCC3STR
R330 200RST
EC14 1000U/6.3V
STRARJ1
R331 332RST
Place R3130,R3131,R3132,R3133 as close as Q18 and EC27
VCC
5VDUAL
R55 0/0805
R54 0/0805
For no STR stuff all
Place all as close as U3120 and EC32
5VSB
VR1 YLT1084DS
VCC3SBY
TO-252
P31ADJ1
R33 200RST
BC13 104P
EC9 1000U/6.3V
R34 332RST
For no STR stuff all
VCC3SBY
U28A
16 RSMRST#
PWROK
VCC
D
CLK
GND
PR
CL
Q
74LVC74
ICH2DF
U23B
74LVC08S
NSLP_S5#
16 SLP_S5#
R332
VCC
R145 220
R147 220
2.5VREF
Q16 LM431/SOT89
R146 330
BC80 104P
+12V
C44 104P
1.5VREF
P31SNS1
U12A YOP-LM358S
P31DRV1
C51 103P
VCC3
Q14 PHD3055S
EC3101 1000U/6.3V
C16 104P
VCC1_8
R126 113RST
EC19 1000U/6.3V
R144 470
3 ANODE
1 REF
2 CAT
VCC3
C50 104P
1.5VREF
P31SNS2
U12B YOP-LM358S
C52 103P
Q3101 PHD3055S
VDDQ
R148 1K
EC24 1000U/6.3V
EC20 1000U/6.3V
+12V
R3101 4.7K
R3102 2.7K
TDET1
11 TYPEDET#
Q17 2N3904S
VCC
5VDUAL1
5VSB
JP1
YJ103
JP1(1-2)
YJUMPER-MW
JP1 | KB power on/USB wake up
1-2 | Support
2-3 | No Support
Key:5VDUAL for ICH2,PCI,CNR
5VDUAL1 for KB/MS,USB
VCC3SBY
VR3 LT1087S-0.8A
VCC1_8SBY
EC27 10U/16VS
BC111 104P
R253 470
EC28 10U/16VS
BC122 104P
R254 220
Micro-Star
Title
MS6315
Rev
20A
Document Number
System Voltage Regulators
Last Revision Date:
Friday, September 22,2000
Sheet 31 of 34

Front Panel & Power Connector

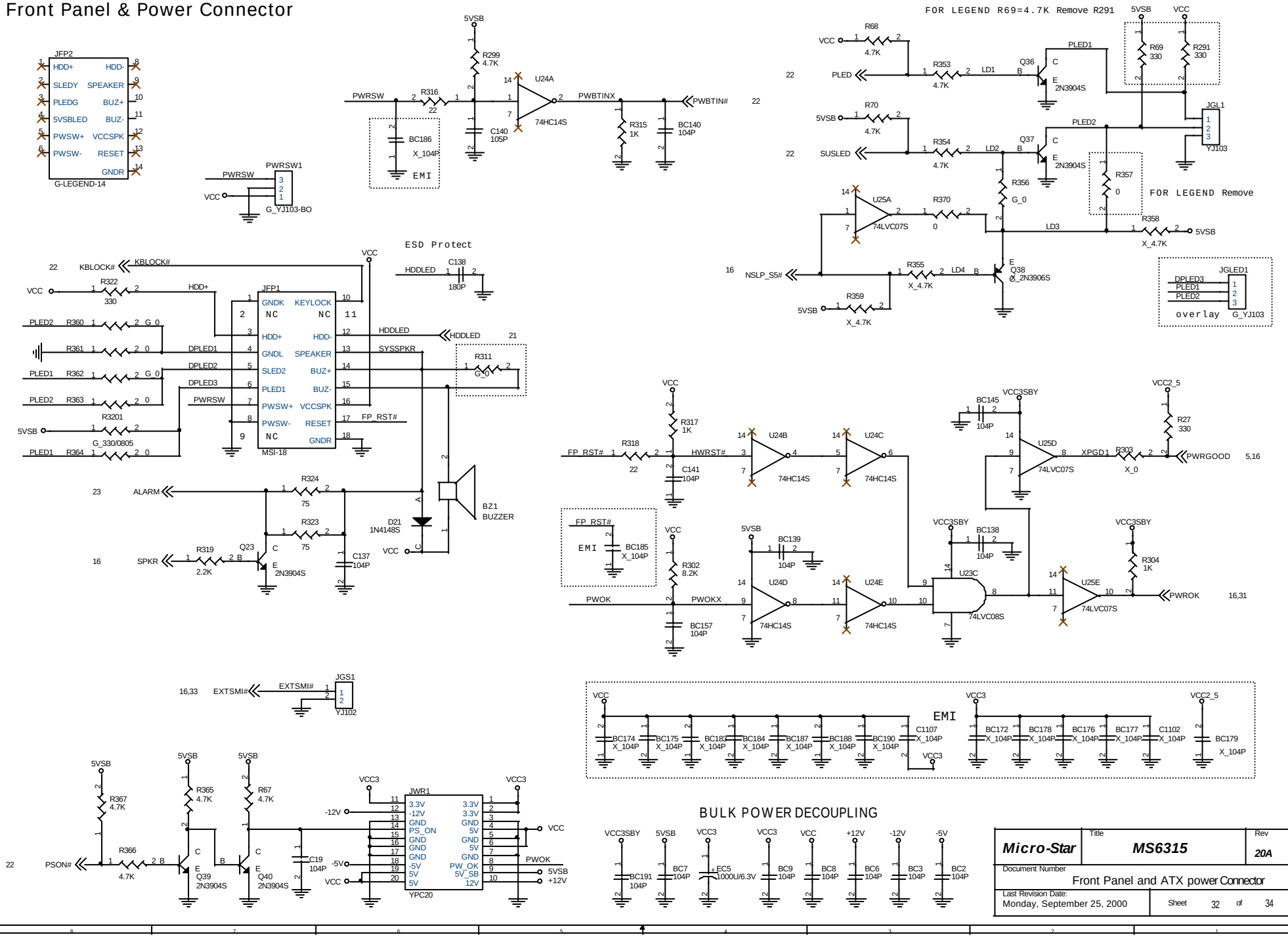

Micro-Star	Title: MS6315		Rev: 20A
Document Number: Front Panel and ATX power Connector			
Last Revision Date: Monday, September 25, 2000		Sheet 32 of 34	

PULL-UP RESISTORS

PCI BUS

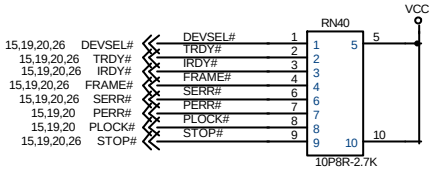

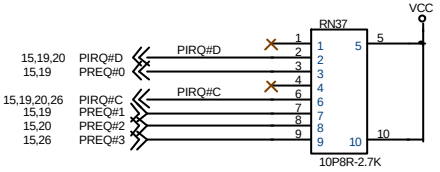

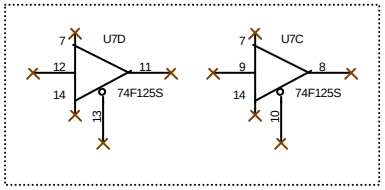

ICH

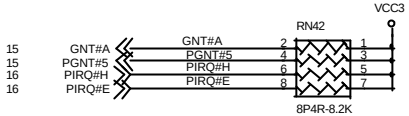

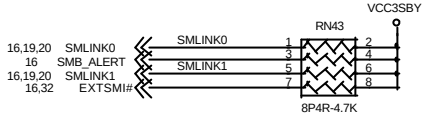

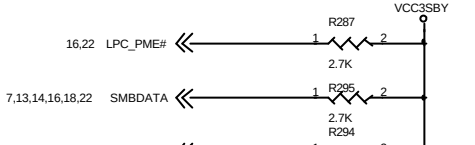

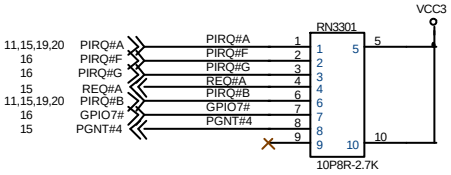

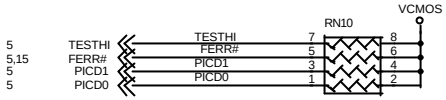

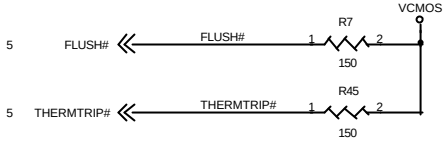

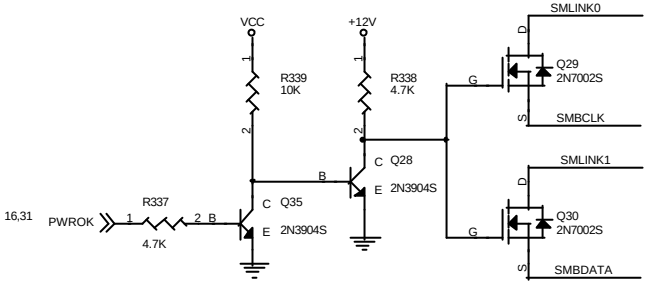

Micro-Star	Title: MS6315	Rev: 20A
Document Number: Pull-Up Resistors		
Last Revision Date: Friday, September 22, 2000	Sheet 33 of 34	

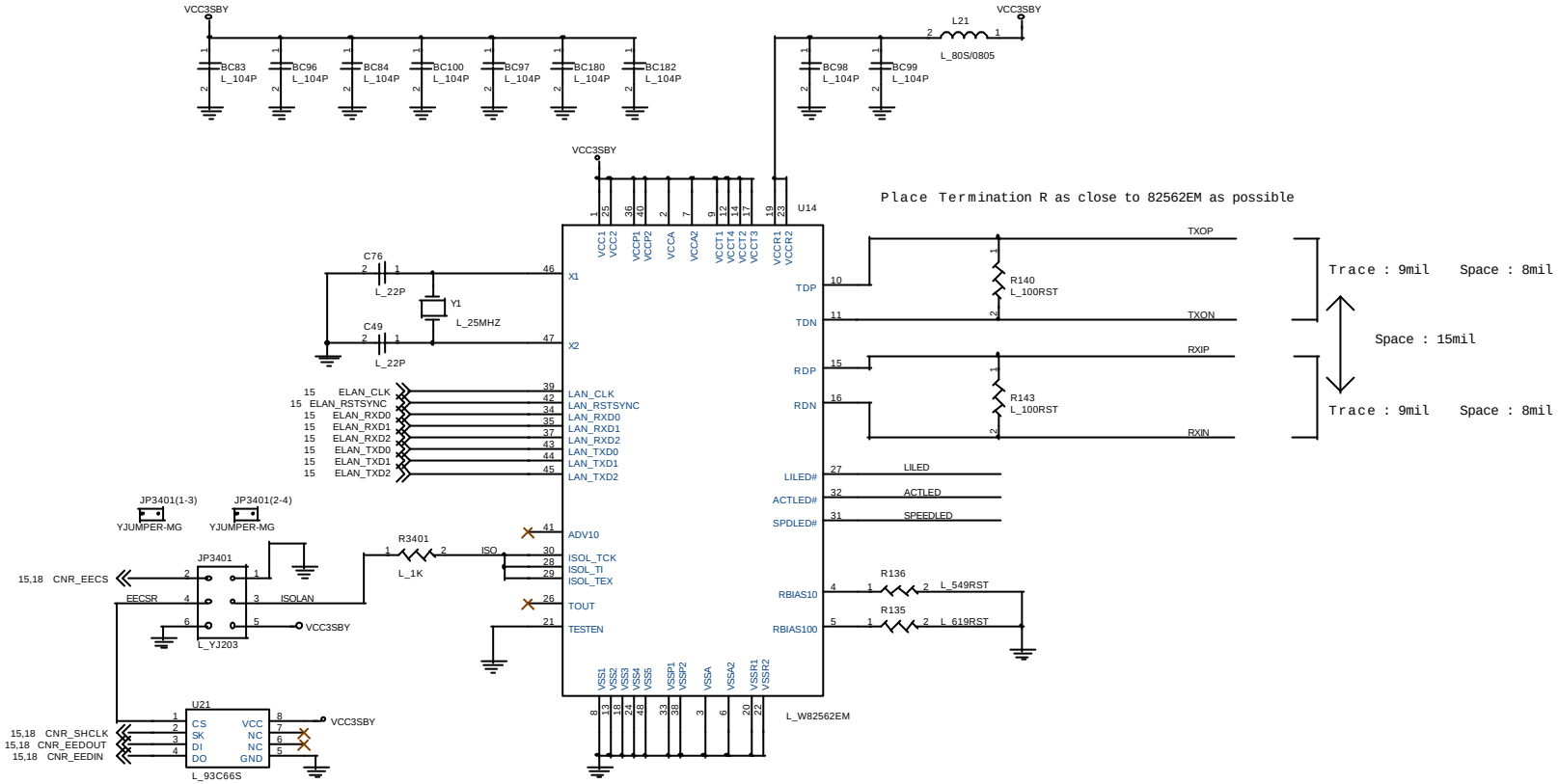

JP3401	On board LAN
1-3,2-4	Enable
3-5,4-6	Disable

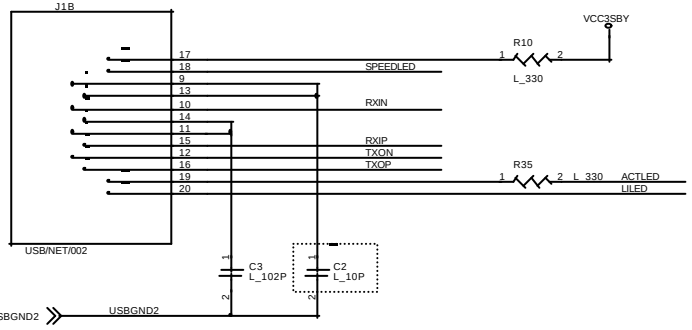

Micro-Star	Title: MS6315		Rev: 20A
Document Number: LAN Connector & I562EM (Kinnereth+)			
Last Revision Date: Friday, September 22,2000	Sheet 34 of 34		

5集

Micro-Star International Co.,Ltd.

料 件 需 求 單(3-1-4-3-QP0601-01)

需求單位填寫:硬三部　發文序號:P01-631530B　發文日期:90/2/19

時效: ☐特急件　☑急件　☐普通件

機種名稱:MS-6315 V3.0B　版本:3.0B　☑是 ☐否 OEM 版本

發文單位:硬三 發文者:吳國群 英文名字:Coding 分機:587 頁次: ／ 單位主管:

廠商(代理商):不限	參考價(台幣)		廠牌/原廠料號:	包裝:
聯絡人:	聯絡電話:		需求日期: 2/20	
Description: MS-6315 Rev:3.0B PCB 料号申請				
零件 Sample 需求: ☐Yes ☑No	每片用量: PCS		零件總數: PCS	
備註: 零件屬性☑非 SMT 零件 ☐ SMT 零件請同時附上外觀尺寸圖 PCB SIZE= 24.5 cm × 21.7 cm.				

Layout 填寫: (請工程師先確認是否已有可共用之 Foot Print Name)

Foot Print Name:	可共用 Foot Print Name :

零件承認課填寫:

料 號: P01-631530B	☐是 ☐否 安規零件
OR Cad Symbol Name :	
備註: 暫時料號:XXX – XXXXXXZ – XXX (第 10 碼出現 Z ,代表暫時料號)	

研發發文: (會簽 => 零件承認 / BOM / LAYOUT / 採購 ; 發文 => IQA / 零倉)

零件課編碼	2/20	BOM	90.2.27	LAYOUT	採 購	2/27
零件課確認	顏 90.2.27 淑雯					

會簽流程: 需求單位→RD 零件課→RD 發文助理→採購→RD 零件課→BOM 小組→Layout→RD 發文助理歸檔→掃描成 pdf 檔案→發文 IQA/零倉/ 相關會簽單位

備　註: 1.新建料號請附零件規格書(含 Package Dimension)。*請附上 Data Sheet 以利編碼作業。*
2.各欄位請確實填寫以利作業。
3.零件需求日期請預留前置作業時間 3~5 天/特殊零件 Lead Time 較長時，請特別註明。
4.若需即時購買之材料，請於備註欄中註明，需求日期及數量，否則僅依一般『樣品/量試單』之流程備料。
5.用途: 零件申請料號，建立 Library 和入檔。
6.同一機種同時申請 2 件以上,第 2 頁以後請填寫: 發文單位/發文者/分機/頁次

89.12.21 VER:5.0